Features

LED Ring Lights (in two sizes) for use with VE Series vision sensors

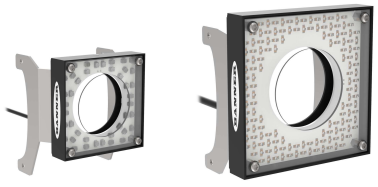

- Low-cost ring lights for VE Series vision sensors
- Solid-state LED matrix; select continuous or strobed operation via sensor software
- Direct connection to a VE Series vision sensor, or to an external power supply using 3 discrete wires
- Direct connection to a VE Series vision sensor if the sensor is powered by 24 V DC
- Mounts directly to a VE Series vision sensor using the included hardware

IMPORTANT: Read the following instructions before operating the light. Please download the complete VE Series Ring Lights technical documentation, available in multiple languages, from www.bannerengineering.com for details on the proper use, applications, Warnings, and installation instructions of this device.

IMPORTANT: Lea el siguiente instructivo antes de operar el luminario. Por favor descargue desde www.bannerengineering.com toda la documentación técnica de los VE Series Ring Lights, disponibles en múltiples idiomas, para detalles del uso adecuado, aplicaciones, advertencias, y las instrucciones de instalación de estos dispositivos.

IMPORTANT: Lisez les instructions suivantes avant d'utiliser le luminaire. Veuillez télécharger la documentation technique complète des VE Series Ring Lights sur notre site www.bannerengineering.com pour les détails sur leur utilisation correcte, les applications, les notes de sécurité et les instructions de montage.

Models

62 × 62 mm Models	80 × 80 mm Models	LED Color	Connection
LEDRRV62X62M	LEDRRV80X80M	Visible red, 630 nm	300 mm (12 in) cable with a 3-pin M8 male quick-disconnect connector The light connects directly to the VE Series smart cameras.
LEDWRV62X62M	LEDWRV80X80M	White, all visible	
LEDBRV62X62M	—	Visible blue, 464 nm to 475 nm	

For a list of discontinued models, see Discontinued Models.

NOTE: Ring lights are not compatible with VELC..- Sealed Lens Covers. Use another lighting technique if an IP67 rating is needed for your application.

Install the Ring Light

1. Attach the ring light bracket to the sides of the VE Series vision sensor using the provided hardware kit.
2. Connect the cable to the sensor.

Specifications

Supply Voltage and Current

Voltage is supplied by the VE Series vision sensors, if operating at 24 V DC (see sensor manual, p/n 191666)

62 × 62 Models: Infrared—24 V DC at 100 mA max.

80 × 80 Models: 24 V DC at 250 mA max.

All other colors: 24 V DC at 130 mA max.

See the electrical characteristics on the product label.

Connection

300 mm (12 in) cable with a 3-pin M8 male quick-disconnect connector

Construction

Cold-rolled steel with black gloss e-coat plating, acrylic window, four M3 × 6 mm screws are included to attach the ring light to the VE Series vision sensor

Light Source

LED, see the Models table for wavelengths

Strobe Type

Active low

Original Instructions
15-Jun-26

© Banner Engineering Corp. All rights reserved.
www.bannerengineering.com

192656
p/n: 192656 Rev. E

ПРОМЭЛЕКТРОНИКА/ sales@prom-elec.com

Useful Life

10,000 hours (LED ON time). When operated within specifications, output decreases less than 30% after 10,000 hours and less than 50% (less than 40% for red and IR models) after 20,000 hours

Operating Conditions

0 °C to +50 °C (+32 °F to +122 °F)

90% at +50 °C maximum relative humidity (non-condensing)

Environmental Rating

IP20 with a qualified lens properly installed

Certifications

Banner Engineering BV
Park Lane, Culliganlaan 2F bus 3
1831 Diegem, BELGIUM

Required Overcurrent Protection

WARNING: Electrical connections must be made by qualified personnel in accordance with local and national electrical codes and regulations.

Overcurrent protection is required to be provided by end product application per the supplied table.

Overcurrent protection may be provided with external fusing or via Current Limiting, Class 2 Power Supply.

Supply wiring leads < 24 AWG shall not be spliced.

For additional product support, go to www.bannerengineering.com.

Supply Wiring (AWG)	Required Overcurrent Protection (A)	Supply Wiring (AWG)	Required Overcurrent Protection (A)
20	5.0	26	1.0
22	3.0	28	0.8
24	2.0	30	0.5

Dimensions

All measurements are listed in millimeters [inches], unless noted otherwise. The measurements provided are subject to change.

62 × 62 mm Models

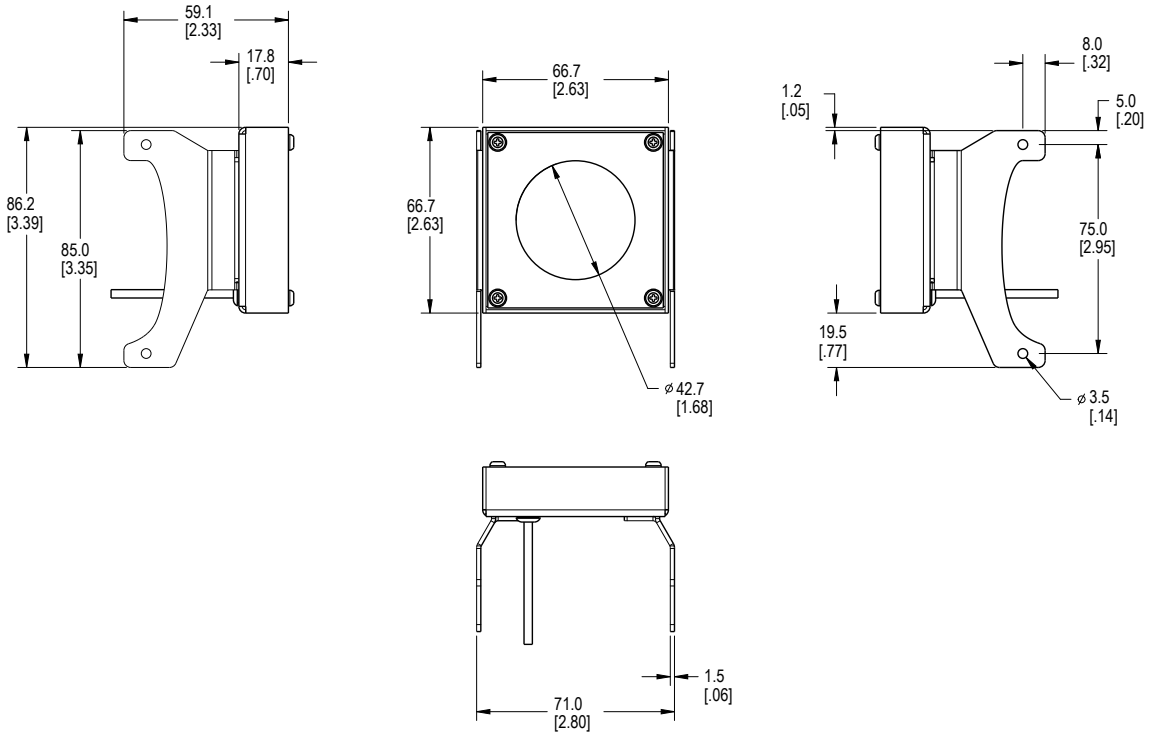

© Banner Engineering Corp. All rights reserved.
www.bannerengineering.com

80 × 80 mm Models

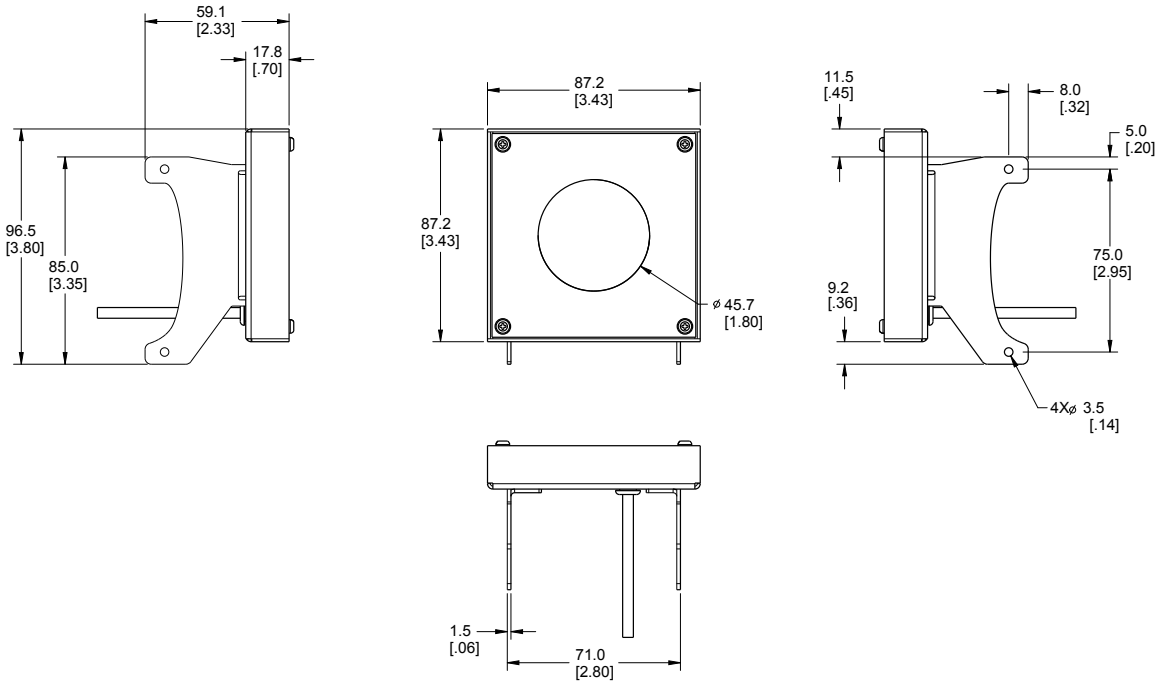

Clean the Light

Regularly remove dust, dirt, or fingerprints from the light source.

1. Blow off dust using anti-static compressed air.
2. If necessary, use a lens cloth and lens cleaner or window cleaner to wipe off remaining debris.

IMPORTANT: Do not use any other chemicals for cleaning the light source.

Product Support and Maintenance

Discontinued Models

The following models are no longer available for order but are still covered by the information in this document.

62 × 62 mm Models	80 × 80 mm Models	LED Color	Connection
LEDIRV62X62M	LEDIRV80X80M	Infrared, 940 nm	300 mm (12 in) cable with a 3-pin M8 male quick-disconnect connector The light connects directly to the VE Series smart cameras.
—	LEDBRV80X80M	Visible blue, 464 nm to 475 nm	
LEDGRV62X62M	LEDGRV80X80M	Visible green, 520 nm to 540 nm	

Banner Engineering Corp Limited Warranty

Banner Engineering Corp. warrants its products to be free from defects in material and workmanship for one year following the date of shipment. Banner Engineering Corp. will repair or replace, free of charge, any product of its manufacture which, at the time it is returned to the factory, is found to have been defective during the warranty period. This warranty does not cover damage or liability for misuse, abuse, or the improper application or installation of the Banner product.

THIS LIMITED WARRANTY IS EXCLUSIVE AND IN LIEU OF ALL OTHER WARRANTIES WHETHER EXPRESS OR IMPLIED (INCLUDING, WITHOUT LIMITATION, ANY WARRANTY OF MERCHANTABILITY OR FITNESS FOR A PARTICULAR PURPOSE), AND WHETHER ARISING UNDER COURSE OF PERFORMANCE, COURSE OF DEALING OR TRADE USAGE.

This Warranty is exclusive and limited to repair or, at the discretion of Banner Engineering Corp., replacement. **IN NO EVENT SHALL BANNER ENGINEERING CORP. BE LIABLE TO BUYER OR ANY OTHER PERSON OR ENTITY FOR ANY EXTRA COSTS, EXPENSES, LOSSES, LOSS OF PROFITS, OR ANY INCIDENTAL, CONSEQUENTIAL OR SPECIAL DAMAGES RESULTING FROM ANY PRODUCT DEFECT OR FROM THE USE OR INABILITY TO USE THE PRODUCT, WHETHER ARISING IN CONTRACT OR WARRANTY, STATUTE, TORT, STRICT LIABILITY, NEGLIGENCE, OR OTHERWISE.**

Banner Engineering Corp. reserves the right to change, modify or improve the design of the product without assuming any obligations or liabilities relating to any product previously manufactured by Banner Engineering Corp. Any misuse, abuse, or improper application or installation of this product or use of the product for personal protection applications when the product is identified as not intended for such purposes will void the product warranty. Any modifications to this product without prior express approval by Banner Engineering Corp will void the product warranties. All specifications published in this document are subject to change; Banner reserves the right to modify product specifications or update documentation at any time. Specifications and product information in English supersede that which is provided in any other language. For the most recent version of any documentation, refer to: www.bannerengineering.com.

© Banner Engineering Corp. All rights reserved.
www.bannerengineering.com

For patent information, see www.bannerengineering.com/patents.

Mexican Importer

Banner Engineering de Mèxico, S. de R.L. de C.V. | David Alfaro Siqueiros 103 Piso 2 Valle oriente | San Pedro Garza Garcia Nuevo Leòn, C. P. 66269

81 8363.2714

© Banner Engineering Corp. All rights reserved.
www.bannerengineering.com