

MINI-BEAM SMU31 Universal Voltage Series Sensor

Original Instructions
p/n: 69944 Rev. D
24-Jun-26
© Banner Engineering Corp. All rights reserved. www.bannerengineering.com

ПРОМЭЛЕКТРОНИКА/ sales@prom-elec.com

Contents

Chapter 1 Features 3
Models 3
Overview 5
Specification 5
FCC Part 15 Class A for Unintentional Radiators 5
Industry Canada ICES-003(A) 6
Dimensions 6

Chapter 2 Installation Instructions 7
Wiring 7
Installation and Alignment 7
Opposed Mode Alignment 7
Retroreflective Mode Alignment 8
Diffuse Mode Alignment 8
Convergent Mode Alignment 8
Installing the Glass Fibers in MINI-BEAMs 9
Installing Plastic Fibers on a MINI-BEAM 9
Cut the Plastic Fiber 10

Chapter 3 Accessories 11
Retroreflective Targets 11
Replacement MINI-BEAM Lens Assemblies 11
Aperture Kits for MINI-BEAMs 11
Brackets 13

Chapter 4 Product Support and Maintenance 15
Discontinued Models 15
Repairs, Translations, and Replacement Parts 16
Contact Us 18
Banner Engineering Corp Limited Warranty 19

© Banner Engineering Corp. All rights reserved. www.bannerengineering.com

Chapter 1 Features

Photoelectric sensors with electromechanical relay output

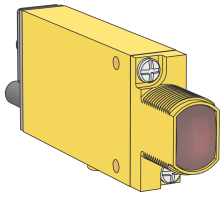

- Popular, compact MINI-BEAM package
- Universal supply voltage: 24 to 240 V AC, 50/60 Hz; 24 to 240 V DC (1.5 watts or 2.5 V A maximum)
- Easy-to-operate sensors with few necessary adjustments
- Light/Dark Operate select switch and 15-turn Gain potentiometer are protected by a gasketed clear acrylic cover
- Multiple sensing modes include: Opposed, Retroreflective, Diffuse, Divergent, and Convergent, plus Glass and Plastic Fiber Optic models
- 3-amp SPDT (Single-Pole-Double-Throw) electromechanical relay output
- Exclusive, patented Alignment Indicating Device system (AID™) lights a rear-panel mounted LED indicator when the sensor sees a light condition; superimposed pulse rate indicates received light signal strength
- Wide array of mounting options, including 18 mm in-line thread
- Integral, unterminated cables 2 m (6.5 ft) or 9 m (30 ft) long are available

WARNING:

- **Do not use this device for personnel protection**
- Using this device for personnel protection could result in serious injury or death.
- This device does not include the self-checking redundant circuitry necessary to allow its use in personnel safety applications. A device failure or malfunction can cause either an energized (on) or de-energized (off) output condition.

Models

Opposed mode emitters (E) and receiver (R) sensors have a small effective beam size and are ideal for accuracy-dependent applications, particularly when used with an aperture. They have the power to burn through dust and dirt and may even sense opaque materials through a thin-walled container.

Opposed mode sensors

Model	Range	LED	Sensing Mode	Connection
SMU31E	3 m (10 ft)	Infrared, 880 nm	Opposed emitter	2 m (6.5 ft) cable
SMU31E W/30			Opposed emitter	9 m cable
SMU31R			Opposed receiver	2 m (6.5 ft) cable
SMU31EL	30 m (100 ft)		Opposed emitter, long range	2 m (6.5 ft) cable
SMU31RL			Opposed received, long range	2 m (6.5 ft) cable

Non-polarized and polarized retroreflective mode sensors are excellent for sensing even small items where sensing is possible from one side only. Recommended for relatively clean environments where high excess gain is not required.

Retroreflective mode sensors

Model	Range	LED	Sensing Mode	Connection
SMU315LV	5 m (15 ft)	Visible Red, 650 nm	Non-Polarized Retroreflective	2 m (6.5 ft) cable
SMU315LV W/30				9 m cable
SMU315LP	10 mm to 3 m (0.4 in to 10 ft)		Polarized Retroreflective	2 m (6.5 ft) cable
SMU315LP W/30				9 m cable

© Banner Engineering Corp. All rights reserved.
www.bannerengineering.com

Diffuse mode sensors are economical single-unit sensors that are excellent for sensing objects of adequate size and reflectivity at short range. Divergent models are useful for sensing small items and translucent or transparent materials at close range.

Diffuse mode sensors

Model	Range	LED	Sensing Mode	Connection
SMU315D	380 mm (15 in)	Infrared, 880 nm	Diffuse	2 m (6.5 ft) cable
SMU315W	130 mm (5 in)		Divergent diffuse	2 m (6.5 ft) cable

Convergent mode sensors feature high excess gain and can detect objects with low reflectivity. They are a good choice for counting adjacent radiused objects and for accurate position sensing.

Convergent mode sensors

Model	Range	LED	Sensing Mode	Connection
SMU315CV	16 mm (0.65 in); 1.3 mm (0.05 in) spot size (diameter of sensing beam) at focus	Visible Red, 650 nm	Convergent	2 m (6.5 ft) cable
SMU315CV2	43 mm (1.7 in); 3 mm (0.07 in) spot size at focus			2 m (6.5 ft) cable

Glass fiber sensors are an excellent option for sensing in tight or inaccessible areas. Fibers withstand vibration and shock and are immune to electrical noise. Glass fibers withstand high temperatures, extreme moisture, and corrosive materials. Glass fiber models are not recommended for applications requiring bending or repeated flexing of fibers (see plastic fiber models).

Glass fiber sensors

Model	Range	LED	Sensing Mode	Connection
SMU315F	Range varies depending on the sensing mode and fiber optics used	Infrared, 880 nm	Glass Fiber Optic	2 m (6.5 ft) cable
SMU315FV		Visible Red, 650 nm		2 m (6.5 ft) cable

Plastic fiber sensors are an excellent option for sensing in tight or inaccessible areas. Fibers withstand vibration and shock and are immune to electrical noise. Plastic fibers function well at temperatures between -30º and +70ºC (-20º to +158ºF) and stand up to repeated flexing. Most are easy to shorten in the field, for custom installations. Plastic fiber models are not recommended for severe environments (see glass fiber models).

Plastic fiber sensors

Model	Range	LED	Sensing Mode	Connection
SMU315FP	Range varies depending on the sensing mode and fiber optics used	Visible Red, 650 nm	Plastic Fiber Optic	2 m (6.5 ft) cable

For a list of discontinued models, see Discontinued Models.

© Banner Engineering Corp. All rights reserved.
www.bannerengineering.com

Overview

MINI-BEAM Universal Voltage sensors (except opposed-mode emitters) have the following features:

- Gain adjustment (1)
- Light/dark operate selection (3)
- Signal strength indicator LED on the back of the sensor, protected behind a clear acrylic cover (2)

Sensor shown with gasketed acrylic cover removed.

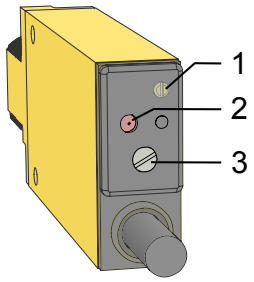

To increase the gain, turn the 15-turn potentiometer clockwise. It is clutched at both ends of travel to avoid damage. A clicking sound may be heard and/or felt when attempting to adjust beyond either limit.

The Signal Strength indicator is Banner's exclusive, patented AID (Alignment Indicating Device). Its pulse rate increases as the received light signal strength increases. This simplifies accurate alignment and gives a relative indication of sensing contrast.

To select Light Operate, insert a small screwdriver into the slot on the select switch and turn it fully clockwise, until the tabs on the control touch the stop. To select Dark Operate, turn the select switch fully counterclockwise, until the tabs touch the opposite side of the stop. Carefully turn the Light/Dark Operate select switch to avoid damaging the small tabs on the switch.

MINI-BEAM Universal Voltage Series sensors have no field-serviceable parts, other than replaceable lenses.

Specification

Supply Voltage and Current

24 V AC to 240 V AC, 50/60 Hz or

24 V DC to 240 V DC (1.5 watts or 2.5 VA maximum)

Supply Protection Circuitry

Protected against transient voltages. DC wiring is without regard to polarity.

Output Configuration

SPDT (Single-Pole, Double Throw) (form C) electromechanical relay, ON/OFF output

Output Rating

Maximum switching power (resistive load): 90 watts, 250 VA

Maximum switching voltage (resistive load): 250 V AC or 30 V DC

Maximum switching current (resistive load): 3 A

Minimum voltage and current: 5 V DC, 10 mA

Mechanical life: 20,000,000 operations

Electrical life at full resistive load: 100,000 operations

Output Protection Circuitry

Protected against false pulse on power up

Output Response Time

Closure time: 20 milliseconds maximum

Release time: 20 milliseconds maximum

Maximum switching speed: 25 operations per second

Repeatability

All sensing modes: 1 millisecond

Adjustments

Light/Dark Operate select switch

15-turn slotted brass screw Gain (sensitivity) adjustment potentiometer

Located on the rear panel, protected by a gasketed, clear acrylic cover. See "Installation and Alignment" on page 7.

Indicators

Patented Alignment Indicator Device system (AID™) lights a rear-panel-mounted LED indicator whenever the sensor sees a "light" condition. Its pulse rate is proportional to the light signal strength (the stronger the signal, the faster the pulse rate).

Construction

Reinforced thermoplastic polyester housing, totally encapsulated, o-ring seal, acrylic lenses, and stainless steel screws

Environmental Rating

IP67

Connections

5-conductor (2-conductor for emitters) 2 m (6.5 ft) unterminated PVC-jacketed cable or 9 m (30 ft) unterminated PVC-jacketed cable, depending on the model

Operating Conditions

Temperature: –20 °C to +55 °C (–4 °F to +131°F)

90% at +50 °C maximum relative humidity (non-condensing)

Application Note

Install transient suppressor (MOV) across contacts switching inductive loads

FCC Part 15 Class A for Unintentional Radiators

This equipment has been tested and found to comply with the limits for a Class A digital device, pursuant to Part 15 of the FCC Rules. These limits are designed to provide reasonable protection against harmful interference when the equipment is operated in a commercial environment. This equipment generates, uses, and can radiate radio frequency energy and, if not installed and used in accordance with the instruction manual, may cause harmful interference to radio communications. Operation of this equipment in a residential area is likely to cause harmful interference in which case the user will be required to correct the interference at his own expense.

(Part 15.21) Any changes or modifications not expressly approved by the party responsible for compliance could void the user's authority to operate this equipment.

© Banner Engineering Corp. All rights reserved.
www.bannerengineering.com

Industry Canada ICES-003(A)

This device complies with CAN ICES-3 (A)/NMB-3(A). Operation is subject to the following two conditions: 1) This device may not cause harmful interference; and 2) This device must accept any interference received, including interference that may cause undesired operation.

Cet appareil est conforme à la norme NMB-3(A). Le fonctionnement est soumis aux deux conditions suivantes : (1) ce dispositif ne peut pas occasionner d'interférences, et (2) il doit tolérer toute interférence, y compris celles susceptibles de provoquer un fonctionnement non souhaité du dispositif.

Dimensions

Models with suffix E, EL, R, RL, LV, LP, D, CV, and CV2

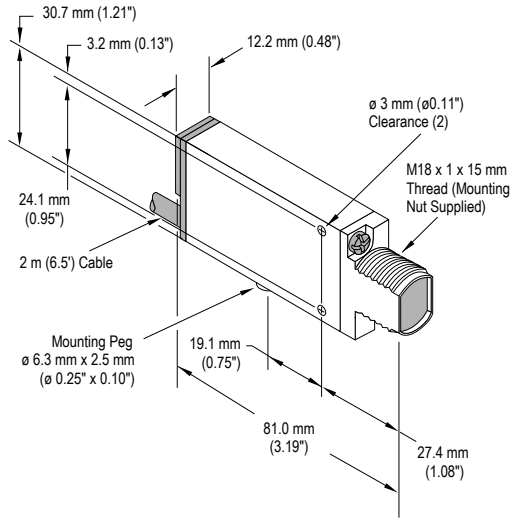

Model SMU315W

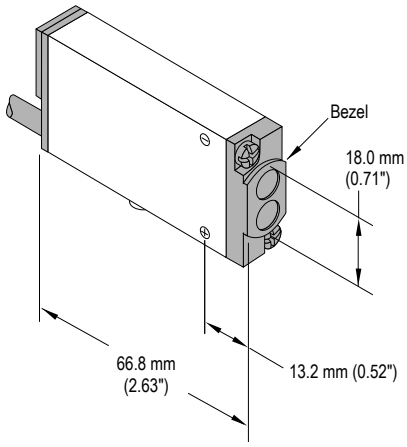

Model SMU315FP

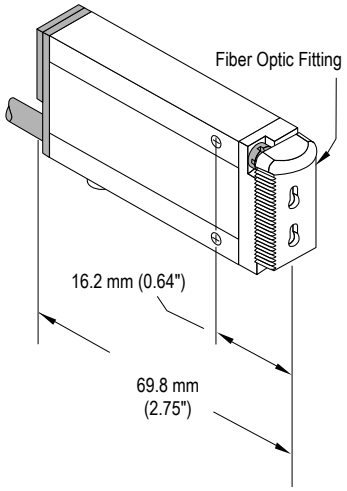

Models with suffix F and FV

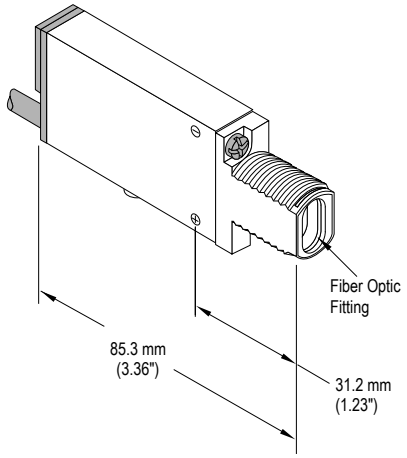

© Banner Engineering Corp. All rights reserved.

Chapter 2 Installation Instructions

Wiring

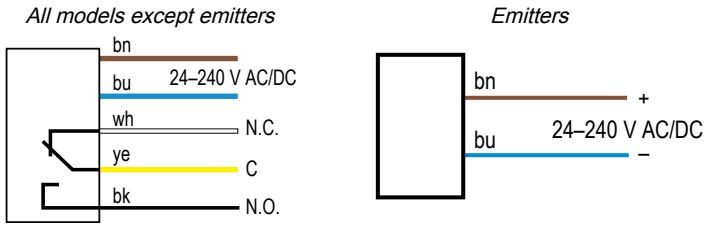

- Output type for all models (except emitters) is SPDT Electromechanical Relay
- Install transient suppressor (MOV) across contacts switching inductive loads
- Connection of DC power is without regard to polarity
- Maximum switching current is 3 amps - see Specifications

Installation and Alignment

MINI-BEAM sensors perform most reliably if they are properly aligned and securely mounted. For maximum mechanical stability, mount MINI-BEAM sensors through 18 mm diameter holes by their threaded barrel (where available), or use a mounting bracket. A complete selection of mounting brackets is available. Visit www.bannerengineering.com or contact Banner Engineering for information on mounting options.

1. Using line-of-sight, position the MINI-BEAM sensor to its emitter (opposed-mode sensing) or to its target (all other sensing modes).
    - When using a retroreflective sensor, the target is the retroreflector (or *retro target*).
    - For diffuse or convergent sensing modes, the target is the object to be detected.
2. Apply power to the sensor (and to the emitter, if using the opposed mode).
3. Advance the 15-turn Gain control to maximum (clockwise end of rotation), using a small flat-blade screwdriver.

   The Gain control is clutched at both ends to avoid damage and will free-wheel when either endpoint is reached.

   If the MINI-BEAM sensor receives its light signal, then the red LED alignment indicator flashes at a rate proportional to the signal strength (faster = more signal).
4. Move the sensor (or move the retro target, if applicable) up-down-right-left (including angular rotation) to find the center of the movement zone within which the LED indicator remains ON.
5. Reduce the Gain setting by turning the Gain control.

   Reducing the Gain setting reduces the movement zone size and enables more precise alignment.
6. Repeat the alignment motions after each Gain reduction.
7. When optimum alignment is achieved, mount the sensor(s) (and the retro target, if applicable) solidly in that position.
8. Increase the Gain to the maximum.
9. Test the sensor by placing the object to be detected in the sensing position, and then removing it.

   The Alignment Indicator LED should turn ON when the sensing beam is established (Light condition), and turn OFF when the beam is broken (Dark condition).

Opposed Mode Alignment

In opposed-mode sensing, the sensor's emitter and receiver are housed in two separate units. The emitter is placed opposite the receiver so that the light beam goes directly from the emitter to the receiver. An object is detected when it breaks the working part of the light beam, known as the effective beam.

In **opposed** sensing modes, light operate means the output is on when the beam is unblocked and dark operate means the output is on when the beam is blocked.

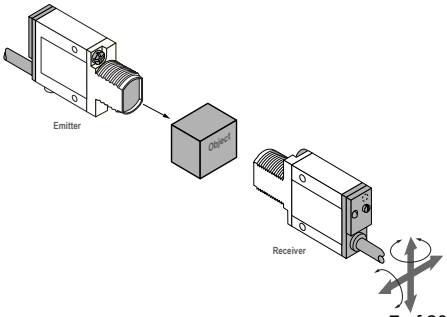

© Banner Engineering Corp. All rights reserved.
www.bannerengineering.com

Flooding occurs when a portion of the sensing beam passes around the object to be sensed. *Burn-through* occurs when a portion of the emitter's light energy passes through a thin or translucent object, and is sensed by the receiver.

To correct either problem, do one or more of the following to reduce the light energy:

- Reduce the Gain adjustment on the receiver
- Add an aperture to one or both lenses (MINI-BEAM apertures, available from Banner, fit neatly inside the lens assembly)
- Intentionally misalign the emitter and receiver

Retroreflective Mode Alignment

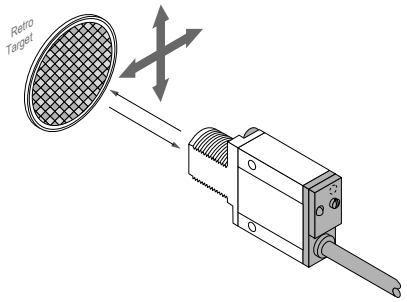

A retroreflective sensor contains both the emitter and receiver elements. The effective beam is established between the emitter, the retroreflector, and the receiver. As with an opposed-mode sensor, an object is sensed when it interrupts or "breaks" the effective beam.

In **retroreflective** sensing modes, light operate means the output is on when the beam is unblocked and dark operate means the output is on when the beam is blocked.

A highly reflective object may reflect enough light back to a retroreflective sensor to allow that object to slip through the beam, without being detected. This problem is called *proxing*, and the following methods may be used to correct it:

- Position the sensor and retro target so the beam will not strike a shiny surface perpendicular to the sensor lens
- Reduce the Gain adjustment
- Add a polarizing filter (for model SMU315LV).

Diffuse Mode Alignment

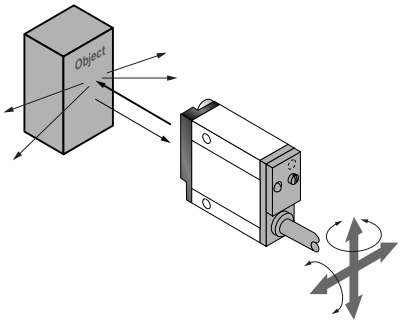

In diffuse-mode sensing, light emitted from the sensor strikes the surface of the object to be detected and is reflected back to the receiver, which is housed with the emitter. With a diffuse-mode sensor, the object is detected when it "makes" the beam, that is, the object reflects the sensor's transmitted light energy back to the sensor.

In **diffuse** sensing modes, light operate means the output is on when the target is present and within the sensing range. Dark operate means the output is on when no target is detected.

If the Alignment LED does not turn OFF when the object is removed from the beam, the sensor is probably detecting light reflected from some background object. To remedy this problem:

- Reduce the reflectivity of the background by painting the surface(s) flat-black, scuffing any shiny surface, or drilling a large hole, directly opposite the diffuse sensor
- Move the sensor closer to the object to be detected and reduce the Gain adjustment. Rule of thumb for diffuse sensing: The distance to the nearest background object should be at least three times the sensing distance

Convergent Mode Alignment

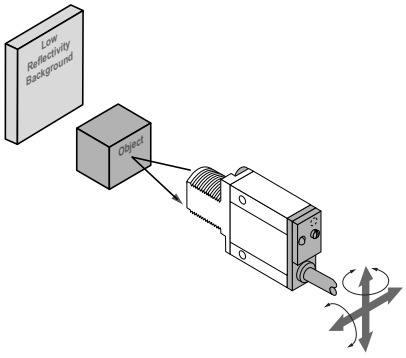

Convergent-mode sensors use a lens system to focus the emitter and receiver elements to an exact point in front of the sensor. Like diffuse-mode and divergent-mode sensors, convergent-mode sensors detect an object when that object completes or "makes" the light beam. This design produces a small, intense, and well-defined sensing area, at a fixed distance from the sensor lens. It is a very efficient use of reflective energy.

In **convergent** sensing modes, light operate means the output is on when the object is present and within the sensing range. Dark operate means the output is on when no target is detected.

The sensing energy of a convergent mode sensor is concentrated at the specified focus point. Convergent mode sensors are less sensitive to background reflections than diffuse mode sensors. However, if background reflections are a problem:

- Skew the sensor position at a 10° to 25° angle to eliminate direct reflections from shiny background surfaces
- Reduce the reflectivity of the background by painting the surface(s) flat-black, scuffing any shiny surface, or drilling a large hole, directly opposite the sensor
- Reduce the Gain adjustment

© Banner Engineering Corp. All rights reserved.

Installing the Glass Fibers in MINI-BEAMs

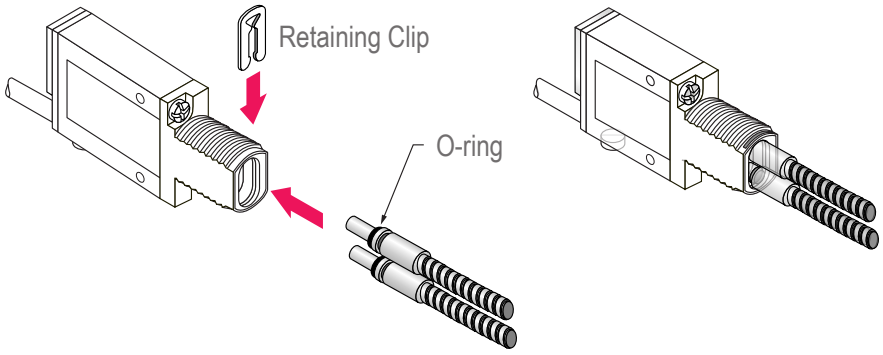

1. Install the O-ring (supplied with the fiber) on each fiber end, as shown in the drawing.
2. While pressing the fiber ends firmly into the ports on the sensor front, slide the U-shaped retaining clip (supplied with the sensor) into the slot in the sensor's barrel, until it snaps into place.

Installing Plastic Fibers on a MINI-BEAM

Follow these instructions to install plastic fibers into your sensor. MINI-BEAMS may have either a fiber gripper or a clamp screw. **MINI-BEAM** and **ECONO-BEAM** sensors for use with plastic fiber optic assemblies include sensors with the letters **FP** in their model number.

MINI-BEAM with fiber grippers

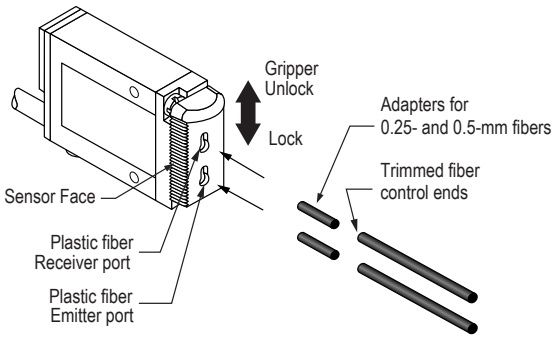

MINI-BEAM with clamp screws

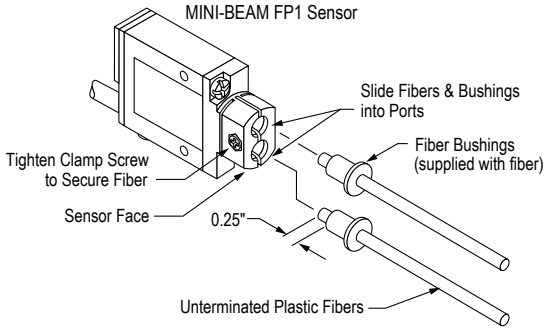

1. Prepare the sensor ends of the fibers (see "Cut the Plastic Fiber" on page 10).
2. Prepare the sensor for the fibers.
   - For models with a fiber gripper: Unlock the fiber gripper as shown in the figure and apply the appropriate fiber adaptors to the fiber, if needed.
   - For models with a clamp screw: Loosen the clamp screw on the sensor face.
3. Insert the plastic fibers.
   - For models with a fiber gripper: Gently insert the prepared fiber ends into the ports as far as they will go.
   - For models with a clamp screw: Align the fiber ends flush with the ends of the bushings as shown. Hold the bushings to the fibers and slide both into the sensor ports. Push the fiber an additional 1 inch through the bushing.
4. Lock in the fibers.
   - For models with a fiber gripper: Slide the fiber gripper back to lock, as shown in the figure.
   - For models with a clamp screw: Tighten the clamp screw to secure the fibers.

© Banner Engineering Corp. All rights reserved.
www.bannerengineering.com

Cut the Plastic Fiber

An unterminated plastic fiber is designed to be cut by the customer to the length required for the application. To facilitate cutting, a Banner model PFC-4 cutting device is supplied with this fiber.

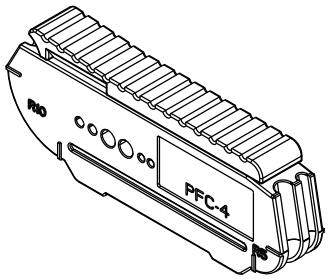

1. Locate the non-terminated end, and determine the length of fiber required for the application.
2. Lift the top of the cutter to open the cutting ports.
3. Insert the non-terminated end through one of the four large cutting ports on the PFC-4 cutter so that the excess fiber protrudes from the back of the cutter.
4. Double-check the fiber length, and close the cutter until the fiber is cut.
5. Gently wipe the cut ends of the fiber with a clean, dry cloth to remove any contamination.

NOTE: Do not use solvents or abrasives on any exposed optical fiber. Do not use a cutting port more than once. The blade may tend to dull after one cut.

© Banner Engineering Corp. All rights reserved.

Chapter 3 Accessories

Retroreflective Targets

Banner offers a wide selection of high-quality retroreflective targets. See www.bannerengineering.com for complete information.

NOTE: Polarized sensors require corner cube-type retroreflective targets. Non-polarized sensors may use any retroreflective target.



Replacement MINI-BEAM Lens Assemblies

MINI-BEAM lens assemblies are field-replaceable. In addition, some lenses may be used to convert from one sensing mode to another, or to change the sensing range of a particular sensor. The possible conversions are listed below.

Replacement Lens Model	Replacement Lens for MINI-BEAM Model	Possible Sensing Mode or Range Changes	
UC-300AG	LVAG	LV to LVAG	
UC-300BZ	W and DBZ	D to DBZ and F to DBZ	
UC-300C..7	C, CV, and CVG	CV2 to CV	
UC-300C2	C2 and CV2	CV to CV2	
UC-300E	E and R	-	
UC-300EL	EL and RL	Extends the range of the E/R models	
UC-300EPD	EPD	-	
UC-300F	F and FV	D to F and DBZ to F	
UC-300FP	FP (old style)	-	
UC-300FP2	FP	-	
UC-300L	LV and D	F to D, LVAG to LV, and DBZ to D	
UC-300LP	LP	-	
UC-300RPD	RPD	-	



Aperture Kits for MINI-BEAMs

Opposed-mode MINI-BEAM sensors may be fitted with apertures that narrow or shape the effective beam of the sensor to more closely match the size or profile of the object to be sensed, for example, the use of “line” (or “slit”) apertures for sensing wire or thread. Aperture material: black PBT

© Banner Engineering Corp. All rights reserved.
www.bannerengineering.com

MINI-BEAM Opposed-Mode Aperture Kits			
Aperture Kit	**Description**	**Pieces**	
Circular			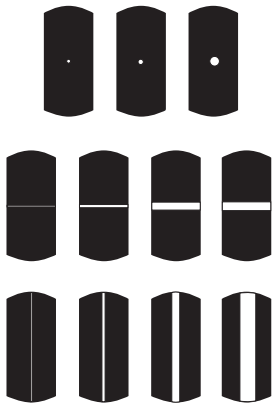
AP31-020	0.5 mm dia.	20	
AP31-040	1 mm dia.	20	
AP31-100	2.5 mm dia.	20	
Horizontal Slot			
AP31-020H	0.5 x 6.4 mm	20	
AP31-040H	1 x 6.4 mm	20	
AP31-100H	2.5 x 6.4 mm	20	
AP31-200H	5.1 x 6.4 mm	20	
Vertical Slot			
AP31-020V	0.5 x 12.7 mm	20	
AP31-040V	1 x 12.7 mm	20	
AP31-100V	2.5 x 12.7 mm	20	
AP31-200V	5.1 x 12.7 mm	20	
Kit			
AP31-DVHX2	2 of each aperture	2	

Aperture Kit	Range (Standard Group I and II Sensor Pairs)				Range (Group I Sensor Pairs with UC-300EL Upper Covers Substituted)	
	Aperture on Both Emitter and Receiver		Aperture on Receiver Only			
	Group I Sensors	Group II Sensors	Group I Sensors	Group II Sensors	Aperture on Both Emitter and Receiver	Aperture on Receiver Only
AP31-020	89 mm	102 mm	457 mm	1.5 m	127 mm	914 mm
AP31-040	330 mm	457 mm	940 mm	3.2 m	183 mm	2 m
AP31-100	1.5 m	3 m	2.5 m	8.2 m	2.1 m	5.8 m
AP31-020H	406 mm	1.8 m	965 mm	9.1 m	864 mm	3.4 m
AP31-040H	914 mm	4 m	1.8 m	12.5 m	1.8 m	5.2 m
AP31-100H	2.3 m	10.4 m	2.9 m	20.7 m	5.2 m	8.5 m
AP31-200H	2.8 m	21.3 m	3 m	24.4 m	8.2 m	11 m
AP31-020V	457 mm	1.7 m	1 m	8.2 m	1 m	3.4 m
AP31-040V	1 m	5.5 m	1.8 m	15.8 m	2.1 m	5.5 m
AP31-100V	2.3 m	10.7 m	2.9 m	22.9 m	6.1 m	8.5 m
AP31-200V	2.8 m	22.9 m	3 m	25.9 m	8.5 m	11 m

GROUP I Emitter/ Receiver Pairs (see Range): SMU31E/SMU31R

GROUP II Emitter/ Receiver Pairs (see Range): SMU31EL/SMU31RL

Example: The MINI-BEAM SMU1E/SMU31R sensor pair is in Group I. With an AP31-040 circular aperture on the receiver only, range is 940 mm (37 in). With AP31-040 apertures on both emitter and receiver, range is 330 mm (13 in). Group I range with AP31-040 apertures and UC-300EL upper covers on both units is 483 mm (19 in); range with receiver aperture only is 2.0 m (80 in).

© Banner Engineering Corp. All rights reserved.
www.bannerengineering.com

Brackets

SMB312S

- Stainless steel 2-axis, side-mount bracket
- CAD Files: DXF, PDF, IGS, STP

A = 4.3 × 7.5, B = diam. 3, C = 3 × 15.3

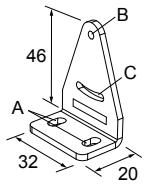

SMB312PD

- Right-angle mounting bracket with a curved slot for versatile orientation
- 12-ga. stainless steel
- 18 mm sensor mounting hole
- Clearance for M4 (#8) hardware
- CAD Files: DXF, PDF, IGS, STP

Hole center spacing: A to B = 24.2
Hole size: A = ø 4.6, B = 17 × 4.6, C = ø 18.5

NOTE: Not for use with plastic fiber optic sensors

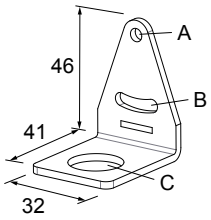

SMB312B

- Stainless steel 2-axis, bottom-mount bracket
- Includes mounting foot
- CAD Files: DXF, PDF, IGS, STP

A = diam. 6.9, B = 4.3 × 10.5, C = 3.1 × 15.2

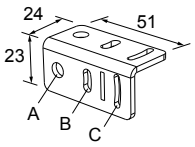

SMB46L

- Right-angle
- L bracket
- 14-ga. 316 stainless steel
- CAD Files: DXF, PDF, IGS, STP

Hole center spacing: A = 16.0
Hole size: A = 16.5 × 18.7

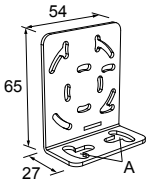

SMB46S

- Right-angle
- S bracket
- 14-ga. 316 stainless steel
- CAD Files: DXF, PDF, IGS, STP

Hole center spacing: A = 16.0
Hole size: A = 16.5 × 18.7, B = 34.0 × 10.0

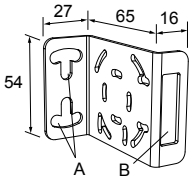

© Banner Engineering Corp. All rights reserved.
www.bannerengineering.com

SMB46U

- Right-angle
- U bracket for sensor protection
- 14-ga. 316 stainless steel
- CAD Files: DXF, PDF, IGS, STP

Hole center spacing: A = 16.0
Hole size: A = 16.5 × 18.7, B = 34.0 × 13.0

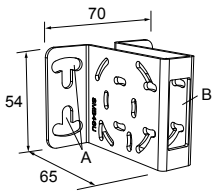

SMB18C

- 18 mm split clamp, black thermoplastic polyester
- Stainless steel mounting hardware included
- CAD Files: DXF, PDF, IGS, STP

A = ø 3 mm (2)
Hole size: B = ø 18 mm

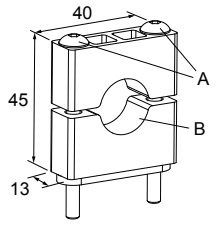

SMB18SF

- 18 mm swivel bracket with M18 × 1 internal thread
- Black thermoplastic polyester
- Stainless steel swivel locking hardware included
- CAD Files: DXF, PDF, IGS, STP

Hole center spacing: A = 36.0
Hole size: A = ø 5.3, B = ø 18.0

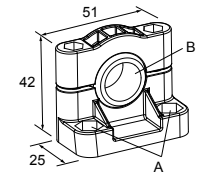

SMB3018SC

- 18 mm swivel side or barrel-mount bracket
- Black reinforced thermoplastic polyester
- Stainless steel swivel locking hardware included
- CAD Files: DXF, PDF, IGS, STP

Hole center spacing: A = 50.8
Hole size: A = ø 7.0, B = ø 18.0

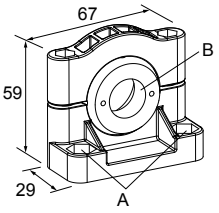

© Banner Engineering Corp. All rights reserved.
www.bannerengineering.com

Chapter 4 Product Support and Maintenance

Discontinued Models

The following models are no longer available for order but are still covered by the information in this document.

Opposed mode sensors

Model	Range	Sensing Mode	Connection
SMU31R W/30	3 m (10 ft)	Opposed receiver	9 m cable
SMU31EL W/30	30 m (100 ft)	Opposed emitter, long range	9 m cable
SMU31RL W/30		Opposed received, long range	9 m cable

Diffuse mode sensors

Model	Range	Sensing Mode	Connection
SMU315D W/30	380 mm (15 in)	Diffuse	9 m cable
SMU315W W/30	130 mm (5 in)	Divergent diffuse	9 m cable

Convergent mode sensors

Model	Range	Connection
SMU315CV W/30	16 mm (0.65 in); 1.3 mm (0.05 in) spot size (diameter of sensing beam) at focus	9 m cable
SMU315CV2 W/30	43 mm (1.7 in); 3 mm (0.07 in) spot size at focus	9 m cable

Glass fiber sensors

Model	Range	LED	Connection
SMU315F W/30	Range varies depending on the sensing mode and fiber optics used	Infrared, 880 nm	9 m cable
SMU315FV W/30		Visible Red, 650 nm	9 m cable

Plastic fiber sensors

Model	Range	LED	Connection
SMU315FP W/30	Range varies depending on the sensing mode and fiber optics used	Visible Red, 650 nm	9 m cable

© Banner Engineering Corp. All rights reserved.

Repairs, Translations, and Replacement Parts

English

Do not attempt any repairs to this Banner device, other than replacing the component(s) listed in this document with original Banner replacement components.

See "Replacement MINI-BEAM Lens Assemblies" on page 11 for a list of replaceable components.

Other than these components, this Banner device contains no field-replaceable components. For other problems, contact Banner Engineering for troubleshooting of this device. If the device is determined to be defective by a Banner Applications Engineer, they will advise you of Banner's RMA (Return Merchandise Authorization) procedure.

```
IMPORTANT: If instructed to return the device, pack it with care. Damage that occurs in return shipping is not covered by warranty.
```

Obtain assistance with product repairs by contacting your local Banner Engineering Corp distributor or by calling Banner directly at (763) 544-3164. Access literature translated into your native language on the Banner website at www.bannerengineering.com or contact Banner directly at (763) 544-3164.

Deutsch

Versuchen Sie nicht, dieses Banner-Gerät zu reparieren, es sei denn, Sie ersetzen die in diesem Dokument aufgeführten Komponenten durch Originalersatzkomponenten von Banner.

Siehe "Replacement MINI-BEAM Lens Assemblies" on page 11 mit einer Liste der Ersatzkomponenten.

Abgesehen von diesen Komponenten enthält dieses Banner-Gerät keine vor Ort austauschbaren Komponenten. Wenden Sie sich bei anderen Störungen zur Fehlerbehebung dieses Geräts an Banner Engineering. Wenn ein Banner-Anwendungstechniker zu dem Schluss kommt, dass dieses Gerät defekt ist, erhalten Sie von dem Techniker Erläuterungen zum RMA-Verfahren (Return Merchandise Authorization) von Banner für die Warenrückgabe.

```
WICHTIG: Wenn Sie der Techniker anweist, das Gerät zurückzusenden, verpacken Sie es bitte sorgfältig. Transportschäden bei der Rücksendung werden von der Garantie nicht abgedeckt.
```

Unterstützung bei Produktreparaturen erhalten Sie von Ihrem örtlichen Banner Engineering Corp Händler oder direkt von Banner unter Tel. (763) 544-3164. Die in Ihre Muttersprache übersetzte Literatur finden Sie auf der Banner-Website unter www.bannerengineering.com oder kontaktieren Sie Banner direkt unter Tel. (763) 544-3164.

Français

Aucune réparation ne doit être effectuée sur ce dispositif, à l’exception du remplacement du/des composant(s) répertorié(s) dans ce document par des pièces de rechange Banner d’origine.

Voir "Replacement MINI-BEAM Lens Assemblies" on page 11 pour obtenir la liste des composants remplaçables.

À l’exception de ces composants, ce dispositif Banner ne contient aucune pièce qui puisse être remplacée sur place. Si vous rencontrez un autre problème, contactez Banner Engineering pour le dépannage du dispositif. Si un ingénieur d’applications Banner détermine que le dispositif est défectueux, il vous indiquera la procédure à suivre pour le retour des produits (RMA).

```
Important : Si vous devez retourner le dispositif, emballez-le avec soin. Les dégâts occasionnés pendant le transport de retour ne sont pas couverts par la garantie.
```

Pour vous aider lors de la réparation de produits, contactez votre distributeur Banner local our appelez directement Banner au (763) 544-3164. La documentation traduite dans votre langue est disponible sur le site internet de Banner www.bannerengineering.com ou contactez directement Banner au (763) 544-3164.

Italiano

Non tentare di riparare questo dispositivo Banner autonomamente, se non sostituendo i componenti indicati nel presente documento con componenti di ricambio originali Banner.

Per un elenco dei componenti che è possibile sostituire, vedere "Replacement MINI-BEAM Lens Assemblies" on page 11.

Ad eccezione di tali componenti, questo dispositivo Banner non contiene altri componenti sostituibili sul campo. Nel caso in cui si riscontrino problemi di altro tipo, si prega di contattare Banner Engineering per richiedere assistenza. Se il dispositivo viene riscontrato difettoso da un tecnico Banner, il nostro personale vi comunicherà la procedura da seguire per ottenere l'autorizzazione al reso (RMA).

```
Importante: Se si ricevono istruzioni di rispedire il dispositivo al produttore, imballarlo con cura. I danni dovuti al trasporto non sono coperti dalla garanzia.
```

Per assistenza nelle riparazioni dei prodotti, contattare il distributore locale Banner Engineering Corp o contattare direttamente Banner al numero (763) 544-3164. È possibile accedere alla documentazione tradotta nella propria lingua madre sul sito Web Banner all'indirizzo www.bannerengineering.com o contattare direttamente Banner al numero (763) 544-3164.

© Banner Engineering Corp. All rights reserved.
www.bannerengineering.com

Español

No intente realizar ninguna reparación en este dispositivo Banner, salvo reemplazar los componentes mencionados en este documento por componentes de repuesto originales de Banner.

Consulte "Replacement MINI-BEAM Lens Assemblies" on page 11 para obtener una lista de componentes que se pueden reemplazar.

Aparte de estos componentes, este dispositivo Banner no contiene componentes reemplazables en campo. Para otras situaciones, comuníquese con Banner Engineering para solucionar los problemas de este dispositivo. Si algún ingeniero de Aplicaciones de Banner determina que el dispositivo está defectuoso se le informará el procedimiento RMA (Autorización de Devolución de Mercancía) de Banner.

Importante: Si se le solicita devolver el dispositivo, empáquelo con cuidado. Puede haber daños durante el envío de devolución que no estén cubiertos por la garantía.

Para reparaciones de productos, por favor contacte a su distribuidor local de Banner Engineering o llame a Banner directamente al 00 1 (763) 544-3164. Vea la literatura traducida en su idioma en el sitio web Banner en www.bannerengineering.com o comuníquese con Banner directamente al 00 1 (763) 544-3164.

中国人

除使用邦纳原厂备件替换本文中列出的组件外，请勿对该邦纳装置进行任何维修操作。

有关可更换组件的列表，请参见 "Replacement MINI-BEAM Lens Assemblies" on page 11。

除这些组件外，该邦纳装置不包含任何可现场更换的组件。对于其他问题，请联系邦纳以获取该装置的故障排查信息。如果装置经邦纳应用工程师认定为有缺陷，他们会告知您邦纳的 RMA（退货授权）程序。

重要注意事项： 如被要求退回装置，请妥善包装后寄回。退货运输过程中发生的损坏不在保修范围内。

请联系当地的 Banner Engineering Corp 经销商或直接致电 Banner +1 (763) 544-3164，以获得产品维修帮助。请访问邦纳网站 www.bannerengineering.com 或直接拨打 +1 (763) 544-3164 联系邦纳，获取翻译成您母语的资料。

한국인

이 문서에 나열된 구성부품을 정품 Banner 교체용 구성부품으로 교체하는 것 외에는 이 Banner 장치를 수리하려고 시도하지 마십시오.

교체 가능한 구성부품 목록은 "Replacement MINI-BEAM Lens Assemblies" on page 11를 참조하십시오.

이 Banner 장치에는 해당 구성부품 이외에 현장에서 교체할 수 있는 구성부품이 없습니다. 다른 문제는 Banner Engineering에 연락하여 해당 장치의 문제 해결을 문의하십시오. Banner 애플리케이션 엔지니어가 장치에 결함이 있는 것으로 판정하면, Banner의 RMA(제품 반품 승인)절차에 대해 안내해 드립니다.

중요: 제품을 반송하도록 안내 받으셨다면 잘 포장해주십시오. 반송 도중에 발생한 손상은 보증 서비스가 적용되지 않습니다.

제품 수리에 대한 지원은 지역 Banner Engineering Corp 대리점에 문의하거나 Banner에 직접 (763) 544-3164로 문의하실 수 있습니다. 사용자의 모국어로 번역된 자료는 Banner 웹사이트 www.bannerengineering.com에서 액세스하거나 Banner에 직접 (763) 544-3164로 문의하실 수 있습니다.

日本語

このバナー装置の修理は、本書に記載されているコンポーネントをバナー純正の交換用コンポーネントに交換する以外、行わないでください。

交換可能な部品のリストについては、"Replacement MINI-BEAM Lens Assemblies" on page 11をご覧ください。

このバナー装置に対応する現場で交換可能な部品は、これらの部品以外にありません。その他の問題については、本装置のトラブルシューティングについてバナーエンジニアリングにお問い合わせください。バナーのアプリケーションエンジニアが装置に欠陥があると判断した場合、バナーのRMA（返品承認）手続きについてお知らせします。

重要 ： 返品を指示された場合は、装置を丁寧に梱包してください。返品時に発生した破損は保証の対象外となります。

製品の修理については、最寄りのBanner Engineering Corp代理店にお問い合わせいただくか、米国+1 (763) 544-3164まで直接お電話でお問い合わせください。バナーのウェブサイト（www.bannerengineering.com）でお客様の言語に翻訳された資料にアクセスするか、米国+1 (763) 544-3164まで直接お電話でお問い合わせください。

© Banner Engineering Corp. All rights reserved.
www.bannerengineering.com

čeština

Nepokoušejte se provádět žádné opravy tohoto zařízení Banner, kromě výměny součástí uvedených v tomto dokumentu za originální náhradní součásti Banner.

Seznam vyměnitelných součástí naleznete v části "Replacement MINI-BEAM Lens Assemblies" on page 11.

Kromě těchto součástí neobsahuje toto zařízení Banner žádné součásti vyměnitelné v provozních podmínkách. V případě potřeby řešení problémů se zařízením kontaktujte společnost Banner Engineering. Pokud je zařízení vyhodnoceno technikem společnosti Banner jako poškozené, bude vám doporučen postup reklamace RMA společnosti Banner.

Důležité: Pokud byl vydán požadavek na vrácení zařízení, pečlivě ho zabalte. Poškození vzniklé při dopravě není považováno za záruční opravu.

Pokud produkt potřebuje opravu, vyžádejte si pomoc od místního distributora společnosti Banner Engineering Corp nebo přímo na telefonním čísle (763) 544-3164. Dokumentaci přeloženou do vašeho jazyka si vyhledejte na webových stránkách společnosti Banner na adrese www.bannerengineering.com nebo se obraťte přímo na společnost Banner na telefonním čísle (763) 544-3164.

Polski

Nie należy podejmować żadnych prób naprawy urządzenia Banner poza wymianą elementów wymienionych w niniejszym dokumencie na oryginalne elementy zamienne Banner.

Zobacz "Replacement MINI-BEAM Lens Assemblies" on page 11, aby zapoznać się z listą wymiennych elementów.

Poza tymi elementami urządzenie Banner nie zawiera żadnych elementów, które można wymieniać samodzielnie. W celu rozwiązania problemów z urządzeniem należy skontaktować się z działem technicznym firmy Banner Engineering. Jeśli urządzenie zostanie uznane za wadliwe przez inżyniera technicznego Banner, poinformuje on użytkownika o firmowej procedurze zwrotu towaru (RMA) w firmie Banner.

Ważne: Jeśli urządzenie ma zostać zwrócone, należy je starannie zapakować. Uszkodzenia powstałe podczas odsyłki nie są objęte gwarancją.

Aby uzyskać pomoc w zakresie naprawy produktu, należy skontaktować się z lokalnym dystrybutorem Banner Engineering Corp lub zadzwonić bezpośrednio do firmy Banner pod numer (763) 544-3164. Dostęp do literatury przetłumaczonej na swój język ojczysty można uzyskać na stronie internetowej firmy Banner pod adresem www.bannerengineering.com lub kontaktując się bezpośrednio z firmą Banner pod numerem (763) 544-3164.

Português

Não tente fazer nenhum reparo neste dispositivo Banner, a não ser substituir o(s) componente(s) listado(s) neste documento por componentes de reposição originais da Banner.

Consulte "Replacement MINI-BEAM Lens Assemblies" on page 11 para obter uma lista de componentes substituíveis.

Além desses componentes, este dispositivo Banner não contém componentes substituíveis em campo. Para outros problemas, entre em contato com a Banner Engineering para solucionar o problema deste dispositivo. Se um engenheiro de aplicações da Banner determinar que o dispositivo está com defeito, ele o informará sobre o procedimento de RMA (Return Merchandise Authorization) da Banner.

Importante: Se for instruído a devolver o dispositivo, embale-o com cuidado. Os danos ocorridos no transporte de devolução não são cobertos pela garantia.

Obtenha assistência para reparos do produto entrando em contato com o distribuidor local da Banner Engineering Corp ou ligando diretamente para a Banner no telefone (763) 544-3164. Acesse a literatura traduzida para seu idioma nativo no site da Banner em www.bannerengineering.com ou entre em contato diretamente com a Banner pelo telefone (763) 544-3164.

Türkçe

Bu belgede listelenen bileşen(ler)in orijinal Banner yedek bileşenleri ile değiştirilmesi dışında bu Banner cihazında onarım yapmaya çalışmayın.

Değiştirilebilir bileşenlerin listesi için "Replacement MINI-BEAM Lens Assemblies" on page 11 bölümüne bakın.

Bu Banner cihazı listelenen bileşenler dışında sahada değiştirilebilecek hiçbir bileşen içermez. Diğer sorunlarda cihazda sorun giderme işlemleri için Banner Engineering ile iletişime geçin. Bir Banner Uygulama Mühendisi tarafından cihazın kusurlu olduğu tespit edilirse, Banner RMA (İade Mal Yetkilendirme) prosedürü hakkında bilgilendirilirsiniz.

ÖNEMLİ: İade etmeniz istenirse, cihazı dikkatli bir şekilde paketleyin. İade nakliyesinde meydana gelecek hasarlar garanti kapsamında değildir.

Yerel Banner Engineering Corp distribütörünüzle iletişime geçerek veya doğrudan (763) 544-3164 numaralı telefondan Banner'ı arayarak ürün onarımlarıyla ilgili yardım alın. Ana dilinize çevrilmiş dokümanlara www.bannerengineering.com adresindeki Banner web sitesinden erişebilir veya (763) 544-3164 numaralı telefondan doğrudan Banner ile iletişime geçebilirsiniz.

Contact Us

Banner Engineering Corp. | 9714 Tenth Avenue North | Plymouth, MN 55441, USA | Phone: + 1 888 373 6767

© Banner Engineering Corp. All rights reserved.
www.bannerengineering.com

For worldwide locations and local representatives, visit www.bannerengineering.com.

Banner Engineering Corp Limited Warranty

Banner Engineering Corp. warrants its products to be free from defects in material and workmanship for one year following the date of shipment. Banner Engineering Corp. will repair or replace, free of charge, any product of its manufacture which, at the time it is returned to the factory, is found to have been defective during the warranty period. This warranty does not cover damage or liability for misuse, abuse, or the improper application or installation of the Banner product.

THIS LIMITED WARRANTY IS EXCLUSIVE AND IN LIEU OF ALL OTHER WARRANTIES WHETHER EXPRESS OR IMPLIED (INCLUDING, WITHOUT LIMITATION, ANY WARRANTY OF MERCHANTABILITY OR FITNESS FOR A PARTICULAR PURPOSE), AND WHETHER ARISING UNDER COURSE OF PERFORMANCE, COURSE OF DEALING OR TRADE USAGE.

This Warranty is exclusive and limited to repair or, at the discretion of Banner Engineering Corp., replacement. **IN NO EVENT SHALL BANNER ENGINEERING CORP. BE LIABLE TO BUYER OR ANY OTHER PERSON OR ENTITY FOR ANY EXTRA COSTS, EXPENSES, LOSSES, LOSS OF PROFITS, OR ANY INCIDENTAL, CONSEQUENTIAL OR SPECIAL DAMAGES RESULTING FROM ANY PRODUCT DEFECT OR FROM THE USE OR INABILITY TO USE THE PRODUCT, WHETHER ARISING IN CONTRACT OR WARRANTY, STATUTE, TORT, STRICT LIABILITY, NEGLIGENCE, OR OTHERWISE.**

Banner Engineering Corp. reserves the right to change, modify or improve the design of the product without assuming any obligations or liabilities relating to any product previously manufactured by Banner Engineering Corp. Any misuse, abuse, or improper application or installation of this product or use of the product for personal protection applications when the product is identified as not intended for such purposes will void the product warranty. Any modifications to this product without prior express approval by Banner Engineering Corp will void the product warranties. All specifications published in this document are subject to change; Banner reserves the right to modify product specifications or update documentation at any time. Specifications and product information in English supersede that which is provided in any other language. For the most recent version of any documentation, refer to: www.bannerengineering.com.

For patent information, see www.bannerengineering.com/patents.

© Banner Engineering Corp. All rights reserved.

LinkedIn

X

Facebook

Instagram



© 2026. All rights reserved.