MODEL NO.	"L"	P/N
PBCT2.66TM3	200 [7.9]	65905
PBCT210TM3	3048 [120]	56124
PBCT217TM3	5182 [204]	41519
PBCT23TM3	1000 [39]	39132

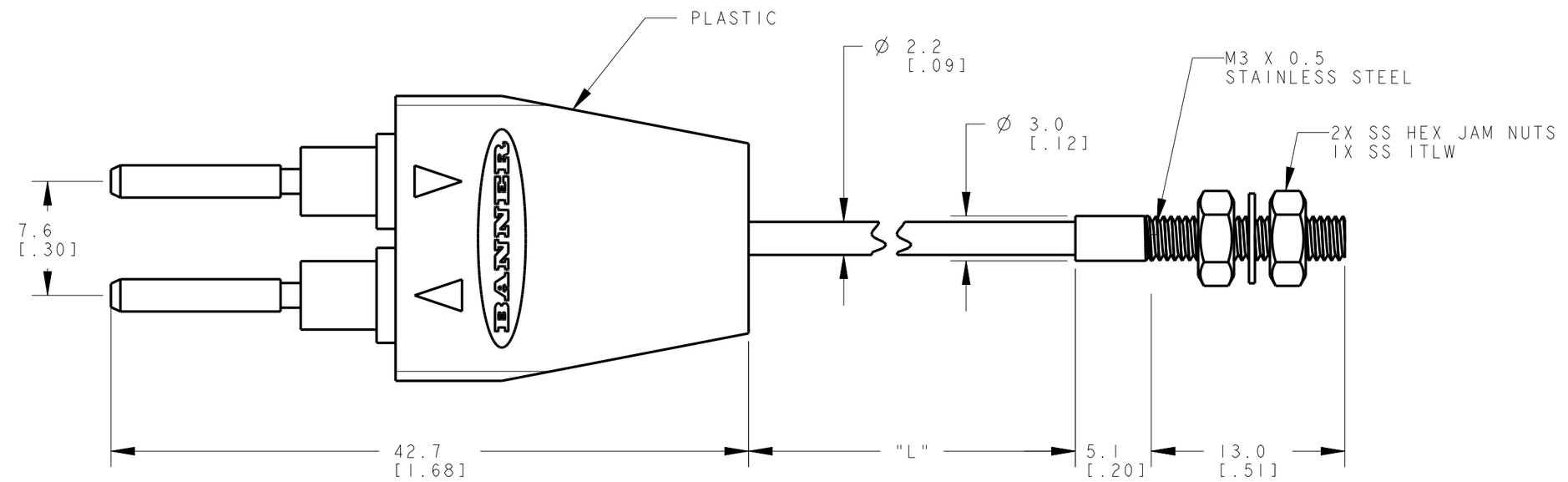

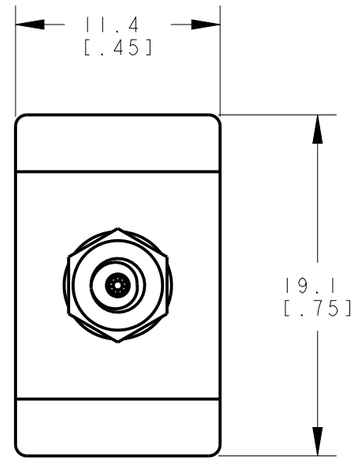

NOTES:
1. ALL DIMENSIONS ARE MILLIMETERS [INCHES] UNLESS OTHERWISE NOTED.
2. REFER TO "www.bannerengineering.com" FOR ADDITIONAL DATA AND SPECIFICATIONS.

This drawing is the property of BANNER ENGINEERING CORP. Any use or reproduction, in any form, without prior written permission of Banner is prohibited.
© 2015 Banner Engineering Corp.

THIRD ANGLE PROJECTION

BANNER ENGINEERING CORP.
www.bannerengineering.com

TITLE

PBCT2 SERIES TERMINATED

SIZE	DRAWING NO.	REV.
B	188693	A
SCALE 3:1	SHEET 1 OF 1	

CREO

ПРОМЭЛЕКТРОНИКА/ sales@prom-elec.com