PLI-A10 Adjustable Beam Spot Plastic Fiber Optic Assembly

Integrated convergent lens, M6 threaded housing, unterminated



Features

- Bifurcated coaxial ø0.5 mm/9x 0.25 mm fibers
- Integrated lens converges emitted light at a variable distance from the compact fiber head
- Beam spot diameter varies according to fiber ferrule insertion depth
- Spot diameter is adjustable from ø0.5 mm (0.04") to ø3.2 mm (0.14")
- Metal hex nuts (M6 x 0.75) and lock washer included
- Cut-to-length fiber optic cable
- A normal plastic fiber optic has a “beam diffusion” angle of about 60°, making it difficult (if not impossible) to sense very small targets. A convergent lens allows focusing of the beam to a small spot, enabling detection of minute targets at relatively long distances.

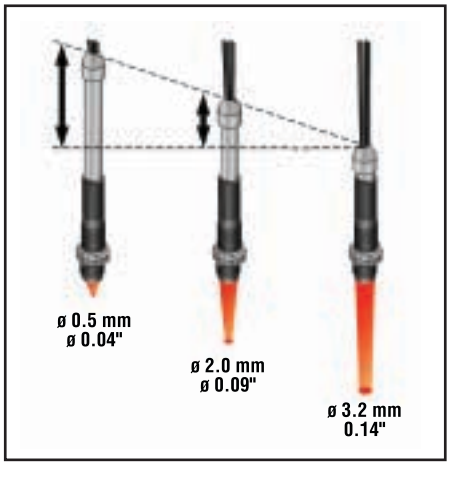

PLI-A10 Fiber Specifications

Construction	Anodized aluminum housing Glass lens PMMA (acrylic) fiber core Fluoropolymer fiber cladding Polyethylene jacket Stainless steel hardware
Focal Distance	8 mm (0.31") to 32 mm (1.26")
Beam Spot Diameter	ø0.5 mm (0.04") to ø3.2 mm (0.14")
Operating Temperature	-40° to +70°C (-40° to +158°F)
Cable Length	Standard length 2 m (79") Custom lengths available on request
Excess Gain	Dependent on amplifier used

Dimensions

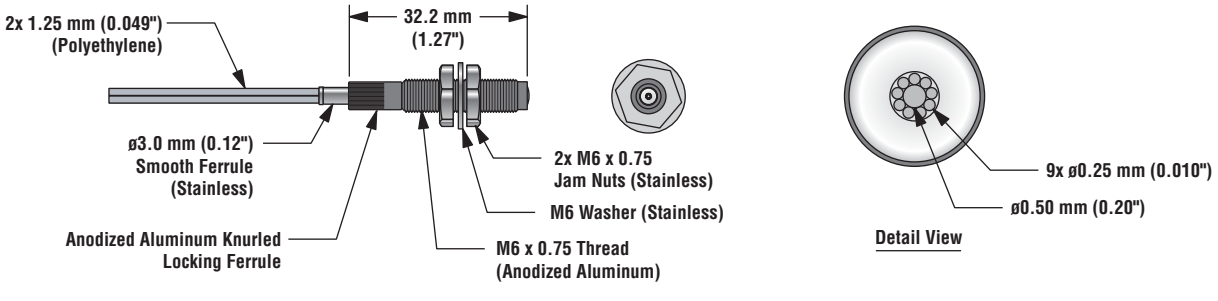

WARRANTY: Banner Engineering Corp. warrants its products to be free from defects for one year. Banner Engineering Corp. will repair or replace, free of charge, any product of its manufacture found to be defective at the time it is returned to the factory during the warranty period. This warranty does not cover damage or liability for the improper application of Banner products. This warranty is in lieu of any other warranty either expressed or implied.

Printed in USA 03/02 P/N 109026

ПРОМЭЛЕКТРОНИКА/ sales@prom-elec.com