| MODEL NO. | "L" | P/N |
|---|---|---|
| IAM.751S | 305 [12] | 20193 |
| IAM.753.5S | 1067 [42] | 17927 |
| IAM.753S | 914 [36] | 17926 |
| IAM.754S | 1219 [48] | 20559 |
| IAM.755S | 1524 [60] | 20278 |
| IAM.756S | 1829 [72] | 20438 |
| IAM.757S | 2124 [84] | 21012 |
| IAM.758S | 2438 [96] | 20733 |
| IAM.752S | 610 [24] | 17304 |

NOTE - M600 SUFFIX INDICATES FIBER POTTED ON PROBE END
WITH EPOXY THAT OPERATES IN MAX. TEMPERATURE OF 600° F

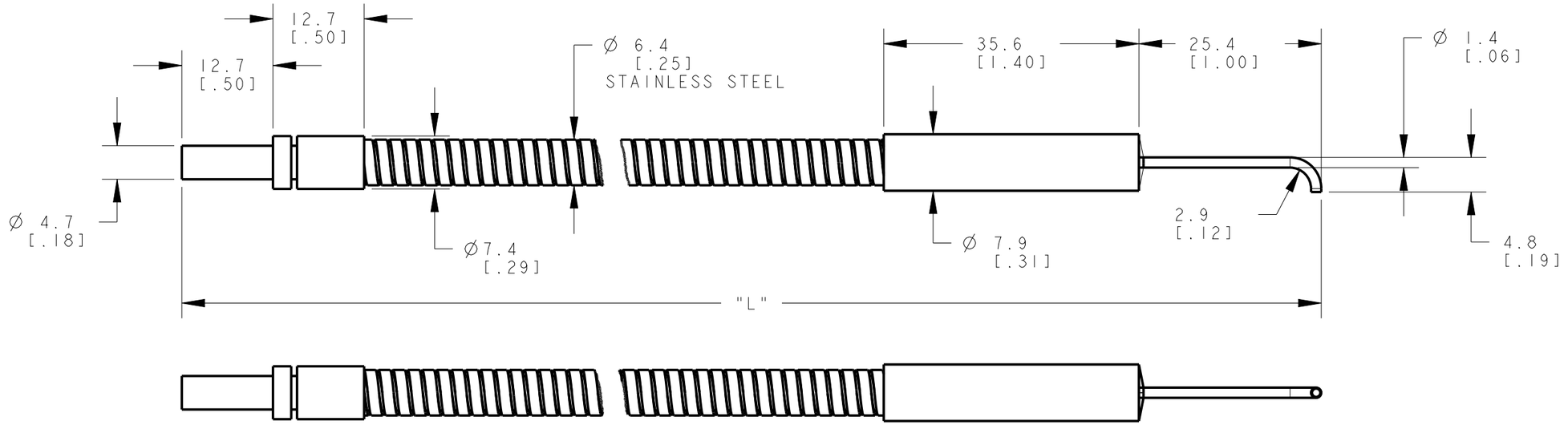


NOTES:
1. ALL DIMENSIONS ARE MILLIMETERS [INCHES] UNLESS OTHERWISE NOTED.
2. REFER TO "www.bannerengineering.com" FOR ADDITIONAL DATA AND SPECIFICATIONS.

This drawing is the property of BANNER ENGINEERING CORP. Any use or reproduction, in any form, without prior written permission of Banner is prohibited.
© 2015 Banner Engineering Corp.

THIRD ANGLE PROJECTION

BANNER ENGINEERING CORP.
www.bannerengineering.com

TITLE

**IAM.752 SERIES**

| SIZE | DRAWING NO. | REV. |
|---|---|---|
| B | 193313 | A |
| SCALE 3:2 | SHEET 1 OF 2 | |

CREO

ПРОМЭЛЕКТРОНИКА/ sales@prom-elec.com

| REVISION HISTORY | | | |
|---|---|---|---|
| REV | DESCRIPTION | DATE | APPROVED |

| MODEL NO. | "L" | "PL" | "AL" | "R" | P/N |
|---|---|---|---|---|---|
| IAM.753SM4.5X.6 | 36 | 4.59 | .62 | .29 | 21408 |
| IAM.752SMA.30 | 24 | 1.0 | .30 | .12 | 21582 |
| IAM.753SMA.30 | 36 | 1.0 | .30 | .12 | 21846 |
| IAM.751.1S | 13 | 1.0 | .19 | .12 | 21924 |
| IAM.751.2S | 14 | 1.0 | .19 | .12 | 21925 |
| IAM.752.3SM13X.3 | 28 | 13.5 | .33 | .12 | 21988 |
| IAM.753S1.5X.19 | 36 | 1.5 | .19 | .12 | 22093 |
| IAM.753SM8 | 36 | 8.0 | .19 | .12 | 22201 |
| IAM.751.5S | 18 | 1.0 | .19 | .12 | 22436 |
| IAM.755SM8 | 60 | 8.0 | .19 | .12 | 22444 |
| IAM.755SM11 | 60 | 11.0 | .19 | .12 | 22455 |
| IAM.752SM1X.69 | 24 | 1.0 | .69 | .25 | 22551 |
| IAM.75.8S | 9 | 1.0 | .19 | .12 | 22622 |
| IAM.753SMA.5 | 36 | 1.0 | .50 | .12 | 22767 |
| IAM.752SM8M600 | 24 | 8.0 | .19 | .12 | 00000 |
| IAM.752SM.5X.5 | 24 | .50 | .50 | .12 | 00000 |
| IAM.754.4S | 53 | 1.0 | .19 | .12 | 22899 |
| IAM.754.7S | 56 | 1.0 | .19 | .12 | 22901 |
| IAM.755.1S | 61 | 1.0 | .19 | .12 | 22903 |
| IAM.75.4S | 5 | 1.0 | .19 | .12 | 00000 |
| IAM.752SM1X1 | 24 | 1.0 | 1.00 | .12 | 23011 |
| IAM.753SM.4X.8 | 36 | .40 | .80 | .12 | 23193 |
| IAM.753SM600 | 36 | 1.0 | .19 | .12 | 23423 |
| IAM.751SMA.5 | 12 | 1.0 | .50 | .12 | 00000 |
| IAM.752SM2 | 24 | 2.0 | .19 | .12 | 83518 |
| IAM.755SMA.4 | 60 | 1.0 | .40 | .12 | 24050 |
| IAM.752SMA.65 | 24 | 1.0 | .65 | .12 | 24295 |
| IAM.752SM2.5 | 24 | 2.5 | .19 | .12 | 24409 |
| IAM.752SM5 | 24 | 5.0 | .19 | .12 | 24410 |
| IAM.753SM1X1 | 36 | 1.0 | 1.00 | .12 | 24656 |
| IAM.753SM1X.625 | 36 | 1.0 | .625 | .12 | 24767 |

| MODEL NO. | "L" | "PL" | "AL" | "R" | P/N |
|---|---|---|---|---|---|
| IAM.756SM1X1 | 72 | 1.0 | 1.00 | .12 | 62287 |
| IAM.753SMA.4 | 36 | 1.0 | .40 | .12 | 62308 |
| IAM.751OS | 120 | 1.0 | .19 | .12 | 70998 |
| IAM.753SM.5X.75 | 36 | .50 | .75 | .12 | 75327 |
| IAM.751OSM600 | 120 | 1.0 | .19 | .12 | 80950 |
| IAM.752SM4.5X.6 | 24 | 4.59 | .62 | .29 | 21305 |
| IAM.75.9SM.19X1 | 11 | .19 | 1.0 | .12 | 20749 |
| IAM.752SM600 | 24 | 1.0 | .19 | .12 | 20550 |
| IAM.752SM.250MCA | 24 | 1.0 | .25 | .09 | 20385 |
| IAM.752SM.08 | 24 | 1.0 | .08 | .09 | 20259 |
| IAM.752SM3 | 24 | 3.0 | .19 | .12 | 21420 |
| IAM.752SM4 | 24 | 4.0 | .19 | .12 | 21421 |
| IAM.751 2S | 144 | 1.0 | .19 | .12 | 10632 |
| IAM.752SM2.1X.34 | 24 | 2.1 | .34 | .12 | 10739 |
| IAM.7515S | 180 | 1.0 | .19 | .12 | 16188 |

Dimensions are
in Inches
TOLERANCES
(Unless Otherwise Specified)
X.X = ±.1"
.XX = ±.01"
.XXX = ±.005"
ANGLE = ±3°
"L" = .5°/Foot

BANNER ENGINEERING Corp.
9717 10th Ave. North
Minneapolis, MN 55441
Tel # 763-544-3164
Fax # 763-544-3573
www.bannerengineering.com

This drawing is the property of BANNER ENGINEERING Corp. and is proprietary in general and in detail. Its contents shall not be revealed to outside parties without the written consent of BANNER.

IAM.752 SERIES — GLASS FIBEROPTIC ASSEMBLY & MOD'S

| 11-12-88 | 2 OF 2 | 193313 | A |
|---|---|---|---|