Product Manual

- Opposed mode slot sensor for simple, reliable detection
- Cost-effective, space-saving design for installation in tight places
- Quick and accurate detection with response time up to 3 kHz
- Bright LED for easy status indication visible from multiple angles
- Robust IP64 housing that is resistant to shock and vibration
- Enhanced circuit protection built into the sensor reduces sensor failures from improper wiring

WARNING:
- **Do not use this device for personnel protection**
- Using this device for personnel protection could result in serious injury or death.
- This device does not include the self-checking redundant circuitry necessary to allow its use in personnel safety applications. A device failure or malfunction can cause either an energized (on) or de-energized (off) output condition.

Models

	Model	Housing Style	Slot Width	Output	Connection
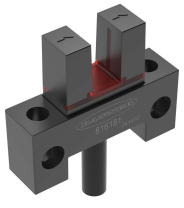	**BCS1KVN2M**	K	5 mm	Complementary NPN	2 m cable
	BCS1KVNQ				200 mm (6 in) cable with a 4-pin M8 male quick disconnect connector
	BCS1KVP2M			Complementary PNP	2 m cable
	BCS1KVPQ				200 mm (6 in) cable with a 4-pin M8 male quick disconnect connector
	**BCS1LVN2M**	L	5 mm	Complementary NPN	2 m cable
	BCS1LVNQ				200 mm (6 in) cable with a 4-pin M8 male quick disconnect connector
	BCS1LVP2M			Complementary PNP	2 m cable
	BCS1LVPQ				200 mm (6 in) cable with a 4-pin M8 male quick disconnect connector
	**BCS1TVN2M**	T	5mm	Complementary NPN	2 m cable
	BCS1TVNQ				200 mm (6 in) cable with a 4-pin M8 male quick disconnect connector
	BCS1TVP2M			Complementary PNP	2 m cable
	BCS1TVPQ				200 mm (6 in) cable with a 4-pin M8 male quick disconnect connector
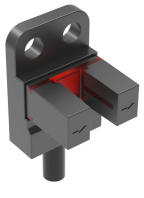	**BCS1YVN2M**	Y	5mm	Complementary NPN	2 m cable
	BCS1YVNQ				200 mm (6 in) cable with a 4-pin M8 male quick disconnect connector
	BCS1YVP2M			Complementary PNP	2 m cable
	BCS1YVPQ				200 mm (6 in) cable with a 4-pin M8 male quick disconnect connector

Continued on page 2

Original Instructions
14-Jul-26

© Banner Engineering Corp. All rights reserved.
www.bannerengineering.com

247926
p/n: 247926 Rev. C

ПРОМЭЛЕКТРОНИКА/ sales@prom-elec.com

Continued from page 1

	Model	Housing Style	Slot Width	Output	Connection
	**BCS1RVN2M**	R	5 mm	Complementary NPN	2 m cable
	BCS1RVNQ				200 mm (6 in) cable with a 4-pin M8 male quick disconnect connector
	BCS1RVP2M			Complementary PNP	2 m cable
	BCS1RVPQ				200 mm (6 in) cable with a 4-pin M8 male quick disconnect connector

Indicator

When the sensor is powered up and no target is breaking the beam, the indicator is on. When a target breaks the beam, the indicator turns off.

Installation Instructions

When mounting the BCS1 with threads, the following must be true:

Screw	Spring Washer	Flat Washer	Tightening Torque
M3 screw	1	ø6 mm (small round)	0.5 N·m

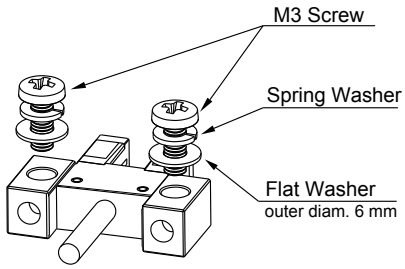

If the ambient temperature is +50 °C (+122 °F) or higher, mount the BCS1 to a metal body.

The sensor requires at least 21 mm of installation space to allow for cable bending. Fixed-mount cable with a minimum bend radius of 19 mm.

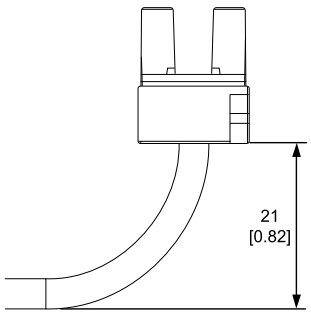

Be careful not to direct an external light source to the receiving end.

NOTE: The cable loses its flexibility at ambient temperatures of -10°C (14 °F) when using a bend-resistant wire.

When using a bend-resistant cable in a movable part, secure the root of the cable to prevent pressure from being exerted on the extracted part of the cable.

When storing fold-resistant cables, prevent the cables from coming into contact with the inspection area and work indication area.

© Banner Engineering Corp. All rights reserved.
www.bannerengineering.com

If a motor, solenoid, solenoid valve, etc. that generates a large surge of electricity is located near the sensor, install a surge absorber on the device. In addition, avoid wiring in parallel with power cables, and connect a capacitor between the +V and 0V of the sensor to make sure that the capacitance has completely disappeared before use.

Mount the Device

1. If a bracket is needed, mount the device onto the bracket.
2. Mount the device (or the device and the bracket) to the machine or equipment at the desired location. Do not tighten the mounting screws at this time.
3. Check the device alignment.
4. Tighten the mounting screws to secure the device (or the device and the bracket) in the aligned position.

Wiring Diagrams

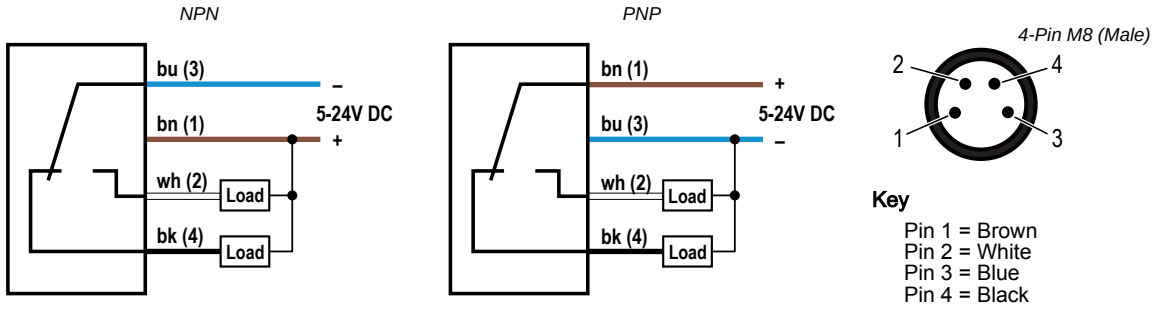

Detection Position

The following figure shows the minimum distance the target must enter the slot so that it is detected.

Target Position for Detection (Minimum)

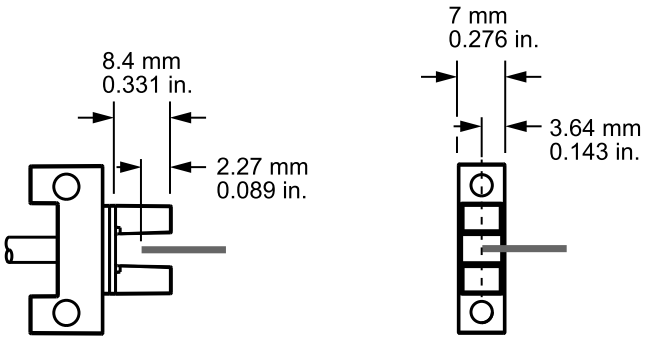

Specifications

Slot Opening
5 mm wide × 8.4 mm deep

Minimum Detection Object
0.8 mm × 1.2 mm opaque body

Repeatability
< 0.01 mm

Supply Voltage
5 V DC to 24 V DC (10% maximum ripple within limits)

Current Consumption
< 15 mA

Control Output
Complementary (light operate (LO) and dark operate (DO)), single output (NPN or PNP), depending on model
Rating: 50 mA total output current
On-state saturation voltage: < 2 V at 50 mA

Supply Protection Circuitry
Power reverse connection, output reverse connection, short circuit protection

Response Time
20 µs ON; 80 µs OFF

Delay at Power Up
Do not use the sensor until it has been powered up for 50 ms

© Banner Engineering Corp. All rights reserved.
www.bannerengineering.com

Indicator Light
Red LED

Environmental Rating
IP64

Operating Conditions
–20 °C to +55 °C (–4 °F to +131°F)
Operating Humidity: 5 % to 85 % relative humidity
Storage Humidity:5% to 95% relative humidity

Ambient Light Immunity
< 1000 lux

Vibration Resistance
10 Hz to 55 Hz, 1.5 mm double amplitude, 2 hours each along X, Y and Z axis

Shock Resistance
Meets IEC 60068-2-27 requirements (Shock: 30G 11 ms duration, half sine wave)

Sensing Beam
Infrared, 940 nm

Construction
Housing: ABS
Translucent Cover: PC

Certifications

Dimensions

All measurements are listed in millimeters, unless noted otherwise. The measurements provided are subject to change.

K Housing Style

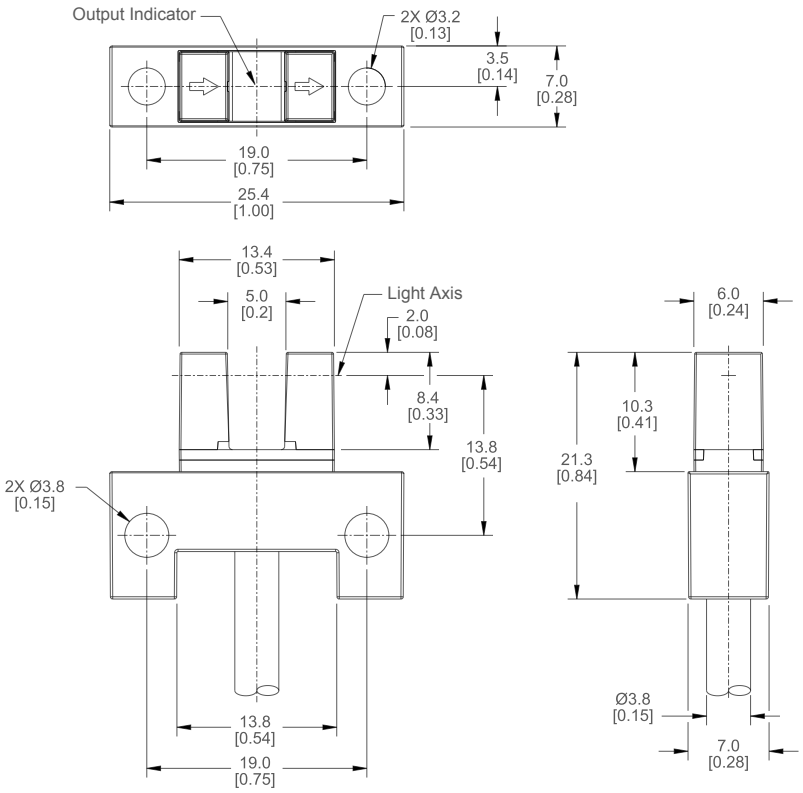

© Banner Engineering Corp. All rights reserved.
www.bannerengineering.com

L Housing Style

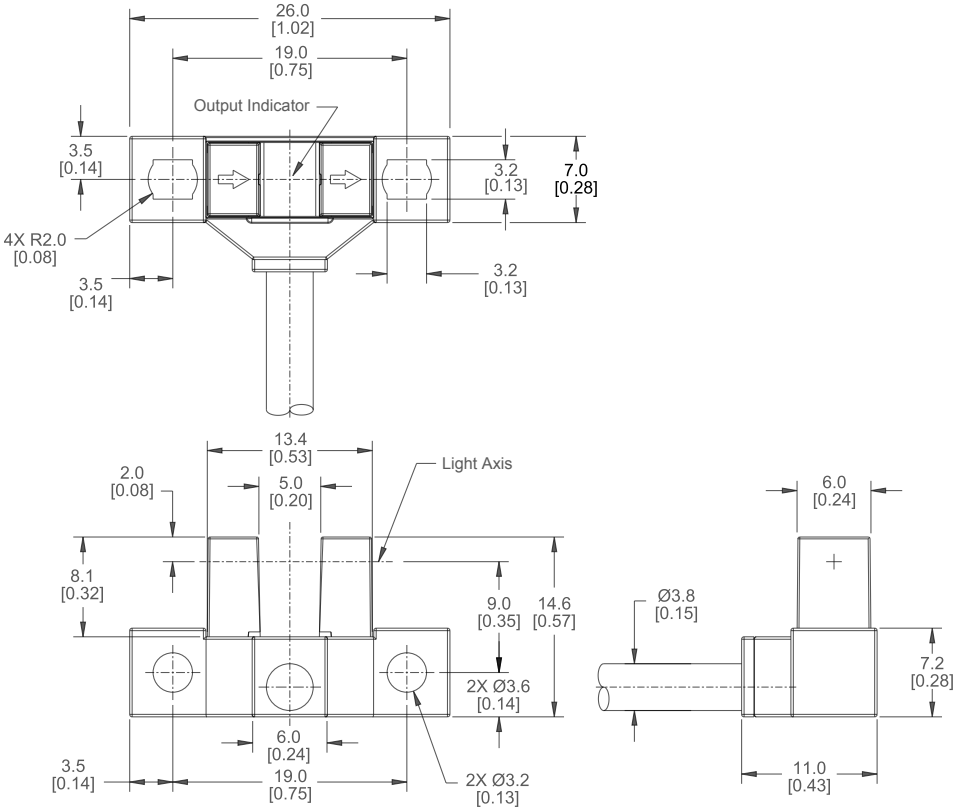

T Housing Style

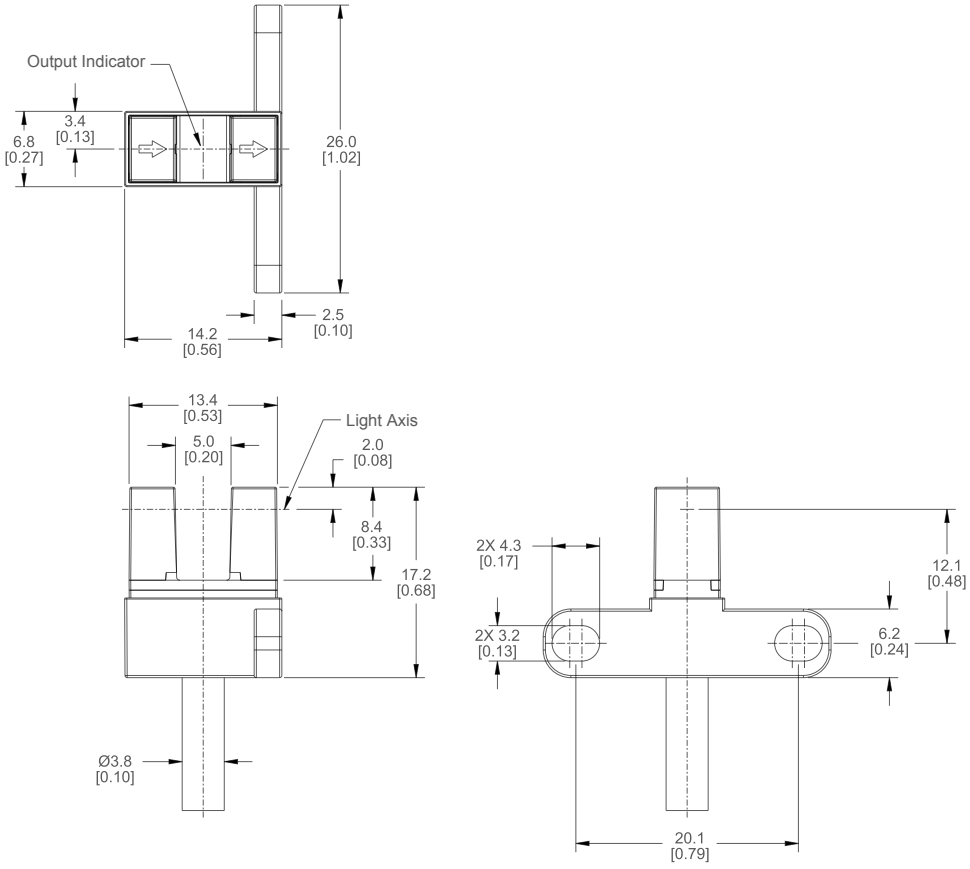

© Banner Engineering Corp. All rights reserved.
www.bannerengineering.com

Y Housing Style

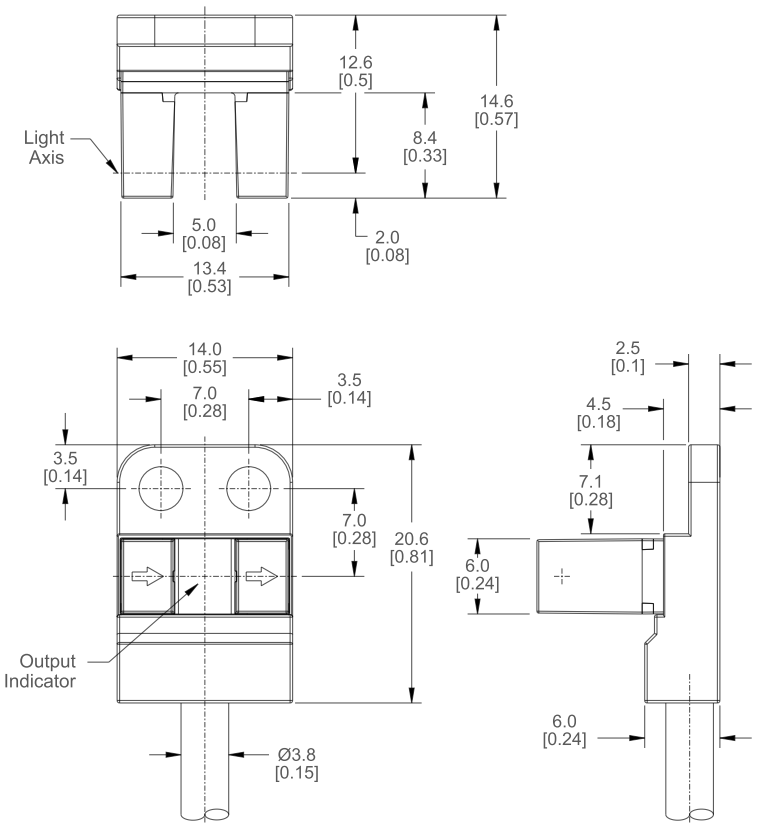

R Housing Style

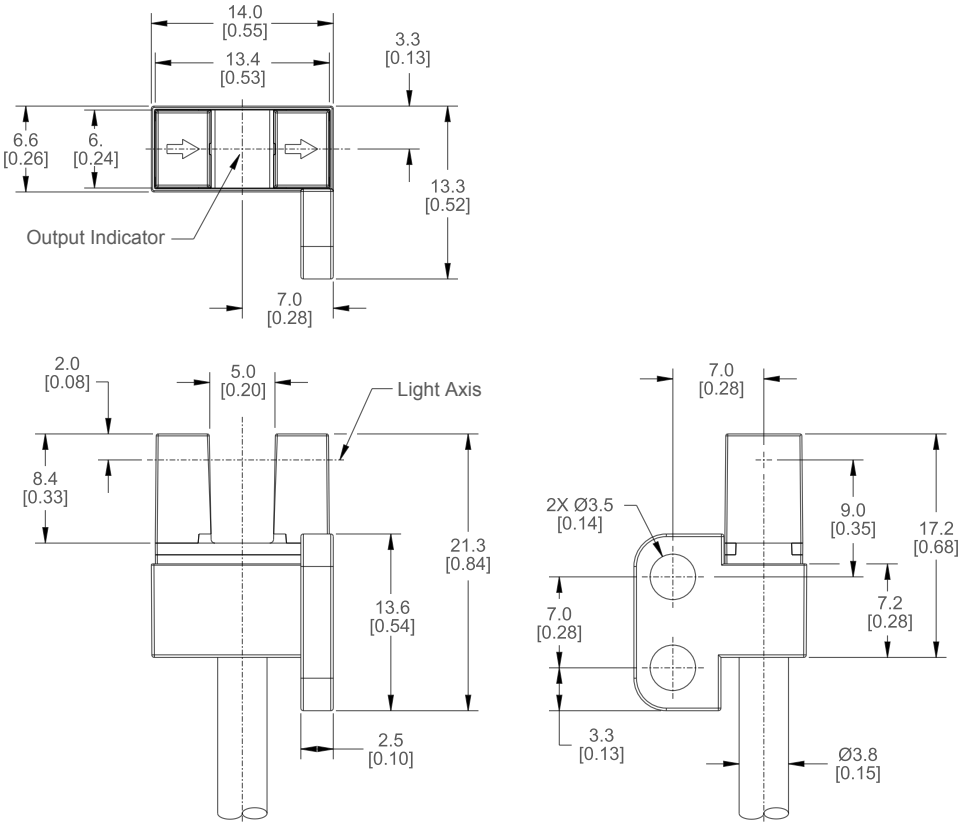

© Banner Engineering Corp. All rights reserved.
www.bannerengineering.com

Product Support

Clean Sensor with Compressed Air and Lint-Free Cloth

Handle the sensor with care during installation and operation. Sensor windows soiled by fingerprints, dust, water, oil, etc. create stray light that may degrade the peak performance of the sensor.

Blow dust from the sensor using filtered, compressed air, then clean as necessary using a lint-free cloth. Do not use any chemicals for cleaning.

Repairs

Contact Banner Engineering for troubleshooting of this device. **Do not attempt any repairs to this Banner device; it contains no field-replaceable parts or components.** If the device, device part, or device component is determined to be defective by a Banner Applications Engineer, they will advise you of Banner's RMA (Return Merchandise Authorization) procedure.

> **IMPORTANT:** If instructed to return the device, pack it with care. Damage that occurs in return shipping is not covered by warranty.

Contact Us

Banner Engineering Corp. | 9714 Tenth Avenue North | Plymouth, MN 55441, USA | Phone: + 1 888 373 6767

For worldwide locations and local representatives, visit www.bannerengineering.com.

Banner Engineering Corp Limited Warranty

Banner Engineering Corp. warrants its products to be free from defects in material and workmanship for one year following the date of shipment. Banner Engineering Corp. will repair or replace, free of charge, any product of its manufacture which, at the time it is returned to the factory, is found to have been defective during the warranty period. This warranty does not cover damage or liability for misuse, abuse, or the improper application or installation of the Banner product.

THIS LIMITED WARRANTY IS EXCLUSIVE AND IN LIEU OF ALL OTHER WARRANTIES WHETHER EXPRESS OR IMPLIED (INCLUDING, WITHOUT LIMITATION, ANY WARRANTY OF MERCHANTABILITY OR FITNESS FOR A PARTICULAR PURPOSE), AND WHETHER ARISING UNDER COURSE OF PERFORMANCE, COURSE OF DEALING OR TRADE USAGE.

This Warranty is exclusive and limited to repair or, at the discretion of Banner Engineering Corp., replacement. **IN NO EVENT SHALL BANNER ENGINEERING CORP. BE LIABLE TO BUYER OR ANY OTHER PERSON OR ENTITY FOR ANY EXTRA COSTS, EXPENSES, LOSSES, LOSS OF PROFITS, OR ANY INCIDENTAL, CONSEQUENTIAL OR SPECIAL DAMAGES RESULTING FROM ANY PRODUCT DEFECT OR FROM THE USE OR INABILITY TO USE THE PRODUCT, WHETHER ARISING IN CONTRACT OR WARRANTY, STATUTE, TORT, STRICT LIABILITY, NEGLIGENCE, OR OTHERWISE.**

Banner Engineering Corp. reserves the right to change, modify or improve the design of the product without assuming any obligations or liabilities relating to any product previously manufactured by Banner Engineering Corp. Any misuse, abuse, or improper application or installation of this product or use of the product for personal protection applications when the product is identified as not intended for such purposes will void the product warranty. Any modifications to this product without prior express approval by Banner Engineering Corp will void the product warranties. All specifications published in this document are subject to change; Banner reserves the right to modify product specifications or update documentation at any time. Specifications and product information in English supersede that which is provided in any other language. For the most recent version of any documentation, refer to: www.bannerengineering.com.

For patent information, see www.bannerengineering.com/patents.

© Banner Engineering Corp. All rights reserved.
www.bannerengineering.com