QS30AF600 Adjustable-Field Sensor

Original Instructions
p/n: 148757 Rev. F
19-Aug-25
© Banner Engineering Corp. All rights reserved. www.bannerengineering.com

ПРОМЭЛЕКТРОНИКА/ sales@prom-elec.com

Contents

Chapter 1 Features 3
Models 3
Overview 4
Specifications 4
FCC Part 15 Class A for Unintentional Radiators 4
Industry Canada ICES-003(A) 5
Excess Gain Curves 5
Performance Curves 5
QS30AF Dimensions (QD Models) 6
QS30AF Dimensions (Cable Models) 7

Chapter 2 Wiring 8

Chapter 3 Configuration Instructions 9
Sensor Orientation 9
Sensor Setup for Light Operate Background Suppression Mode 9
Setup Example 10
Remote Configuration 10
Object SET 10
Cutoff Distance Adjustment Screw Disable/Enable 11
End-of-Travel (EOT) Indicator LED 11
Output States 11

Chapter 4 Quick-Disconnect (QD) Cordsets 12

Chapter 5 Product Support and Maintenance 13
Repairs 13
Contact Us 13
Banner Engineering Corp Limited Warranty 13

© Banner Engineering Corp. All rights reserved. www.bannerengineering.com

Chapter Contents

Models 3
Overview 4
Specifications 4

Chapter 1 Features



Midsize sensors featuring extended range and background suppression mode

- Bipolar discrete outputs, PNP and NPN
- 128-element photo receiver for superior performance on varying colors and textures
- 600 mm sensing range (90% White Card) in midsize QS30 housing
- Background suppression models for reliable detection of objects when the background condition is not controlled or fixed
- Linear multi-turn screw adjustment of cutoff distance
- Enhanced immunity to fluorescent lights
- Improved temperature compensation to minimize cutoff distance variation due to ambient temperature changes
- Powerful, highly collimated visible red sensing beam allows two sensors to be used in close proximity
- Models available with 2 m or 9 m (6.5 ft or 30 ft) cable or integral metal quick-disconnect, or 150 mm (6 in) pigtail
- Tough ABS housing is rated IEC IP67
- Mounting versatility via popular 30 mm threaded barrel or side-mount

WARNING:

- **Do not use this device for personnel protection**
- Using this device for personnel protection could result in serious injury or death.
- This device does not include the self-checking redundant circuitry necessary to allow its use in personnel safety applications. A device failure or malfunction can cause either an energized (on) or de-energized (off) output condition.

Models

Model	Supply Voltage	Sensing Range	Output Type
QS30AF600	10 to 30 V DC	Adjustable Cutoff Range: 50 to 600 mm Maximum Sensing Range: 400mm - 6% Black Card; 500mm - 18% Gray Card; 600mm - 90% White Card Minimum Sensing Range (Dead Zone): 30mm - 6% Black Card	Bipolar (1 NPN and 1 PNP)

Only standard 2 m (6.5 ft) cable models are listed.

- To order the 9 m (30 ft) cable model, add the suffix **W/30** to the model number (for example, **QS30AF600 W/30**).
- To order the 5-pin integral QD, add the suffix **Q** to the model number (for example, **QS30AF600Q**)
- To order the 150 mm (6 inch) PVC cable with a 5-pin M12 connector, add the suffix **Q5** to the model number (for example, **QS30AF600Q5**)

© Banner Engineering Corp. All rights reserved.
www.bannerengineering.com

Overview

Banner's WORLD-BEAM® QS30 Adjustable-Field Sensors with Background Suppression ignore objects beyond the set cutoff distance. Background suppression mode can be used in most situations with varying object color and position or with varying background conditions. The default mode for background suppression sensors is Light Operate (LO).

Sensor Features



1. Green: Power Indicator LED
2. Yellow: Light Sensed Indicator LED (Flashes for Marginal Conditions)
3. Blue/Red: End-of-travel (EOT) Indicator LED
4. Cutoff Distance Adjustment Screw
5. Yellow: Output Indicator LED

In light operate (LO) mode, the output is ON when the target returns the same or more light to the sensor and OFF when the sensor detects less light than the configured/taught target. In **opposed and retroreflective sensing modes**, light operate is active when the beam is unblocked. In **diffuse, fixed field, and adjustable field sensor modes**, light operate is active when the target is present.

In dark operate (DO) mode, the output is ON when the target returns less light to the sensor than the configured target and OFF when the sensor detects more light than the configured/taught target. In **opposed and retroreflective sensing modes**, dark operate is active when the beam is blocked. In **diffuse, fixed field, and adjustable field sensor modes**, dark operate is active when the target is absent.

Specifications

Sensing Range

Adjustable Cutoff Range: 50 mm to 600 mm

Maximum Sensing Range: 400 mm - 6% Black Card, 500 mm - 18% Gray Card, 600 mm - 90% White Card

Minimum Sensing Range (Dead Zone): 30 mm - 6% Black Card

Supply Voltage and Current

10 V DC to 30 V DC (10% maximum ripple within specified limits); Current consumption: < 80 mA at 10 V DC; < 40 mA at 30 V DC

Supply Protection

Protected against reverse polarity and transient voltages

Sensing Beam

Visible red LED, 660 nm

Output Configuration

Bi-polar Models: Solid-state bipolar (SPDT): both sinking and sourcing

Off-state leakage current: < 5 µA at 30 V DC

ON-state saturation voltage

- **NPN:** less than 1.5 V at 100 mA
- **PNP:** less than 2.0 V at 100 mA

Output Protection Circuitry

Protected against false pulse on power-up and continuous overload or short circuit of outputs.

Output Response

5 millisecond ON/OFF; 200 ms delay on power-up; outputs do not conduct during this time

Repeatability

750 µs

Adjustments

Four-turn adjustment screw sets cutoff distance between min. and max. positions, clutched at both ends of travel

Indicators

2 Indicator LEDs on sensor top:

- **Green solid:** Power ON
- **Amber solid:** Light sensed (excess gain > 1.5x)
- **Amber flashing:** Marginal sensing condition (excess gain < 1.5x)

2 Indicator LEDs on sensor back:

- Small Blue/Red End-of-travel (EOT) LED
- Large Amber Output LED

Construction

ABS housing

QD models: nickel-plated brass

Environmental Rating

IP67

Connections

2 m (6.5 ft) 5-wire PVC cable, 9 m (30 ft) PVC cable, or 5-pin integral quick-disconnect or M12 150 mm (6 in) quick-disconnect, depending on model

Operating Conditions

Temperature: –20 °C to +60 °C (–4 °F to +140 °F)

Humidity: 95% at +50 °C maximum relative humidity (non-condensing)

Certifications

CE

Banner Engineering BV
Park Lane, Culliganlaan 2F bus 3
1831 Diegem, BELGIUM

FCC Part 15 Class A for Unintentional Radiators

This equipment has been tested and found to comply with the limits for a Class A digital device, pursuant to Part 15 of the FCC Rules. These limits are designed to provide reasonable protection against harmful interference when the equipment is operated in a commercial environment. This equipment generates, uses, and can radiate radio frequency energy and, if not installed and used in accordance with the instruction manual, may cause harmful interference to radio communications. Operation of this equipment in a residential area is likely to cause harmful interference in which case the user will be required to correct the interference at his own expense.

© Banner Engineering Corp. All rights reserved.

(Part 15.21) Any changes or modifications not expressly approved by the party responsible for compliance could void the user's authority to operate this equipment.

Industry Canada ICES-003(A)

This device complies with CAN ICES-3 (A)/NMB-3(A). Operation is subject to the following two conditions: 1) This device may not cause harmful interference; and 2) This device must accept any interference received, including interference that may cause undesired operation.

Cet appareil est conforme à la norme NMB-3(A). Le fonctionnement est soumis aux deux conditions suivantes : (1) ce dispositif ne peut pas occasionner d'interférences, et (2) il doit tolérer toute interférence, y compris celles susceptibles de provoquer un fonctionnement non souhaité du dispositif.

Excess Gain Curves

QS30AF600 Excess Gain Curve (based on 90% White Card)

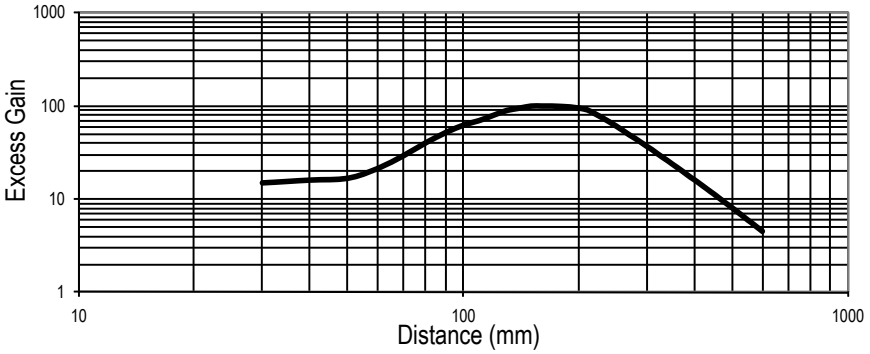

Performance Curves

Minimum separation distance between object and background: background suppression mode*

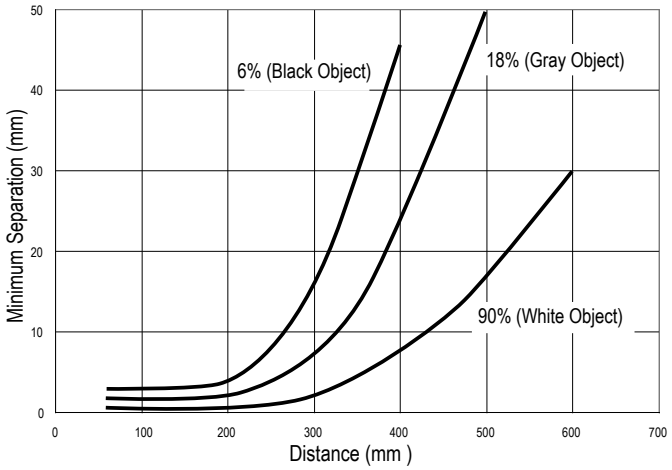

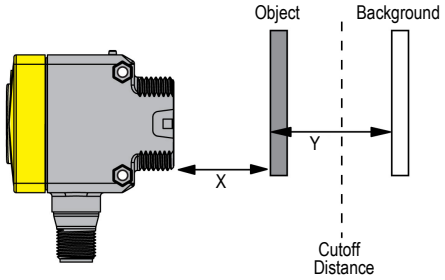

* Targets with severe color contrasts can increase the Minimum Separation Distance

© Banner Engineering Corp. All rights reserved.
www.bannerengineering.com

Typical emitter spot diameter vs. distance



QS30AF Dimensions (QD Models)

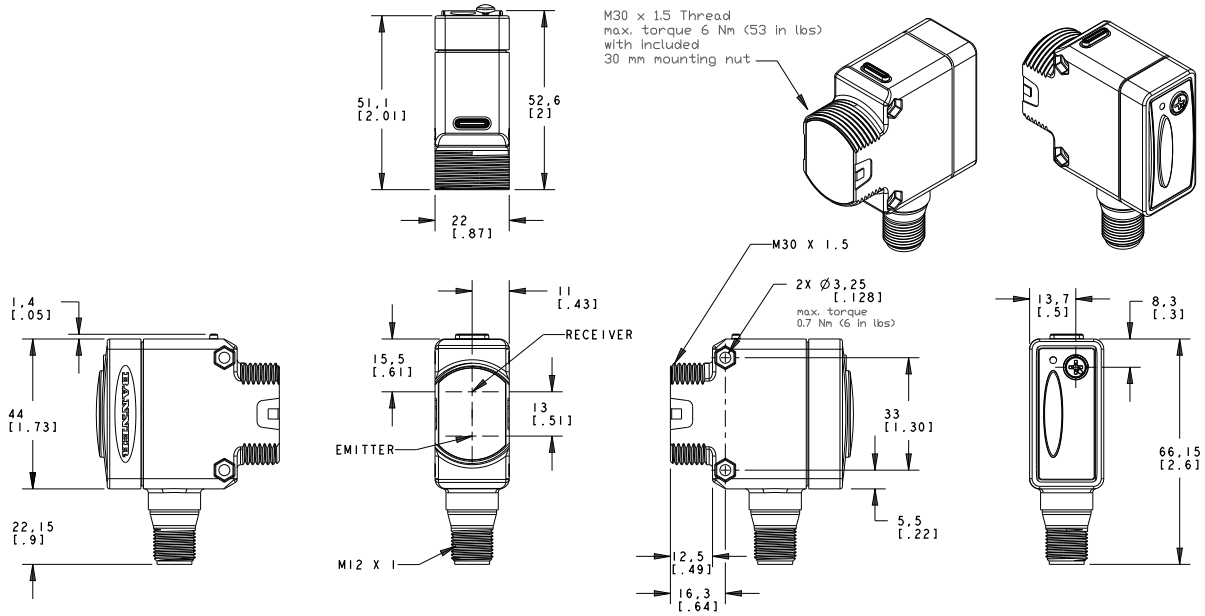

© Banner Engineering Corp. All rights reserved.
www.bannerengineering.com

QS30AF Dimensions (Cable Models)

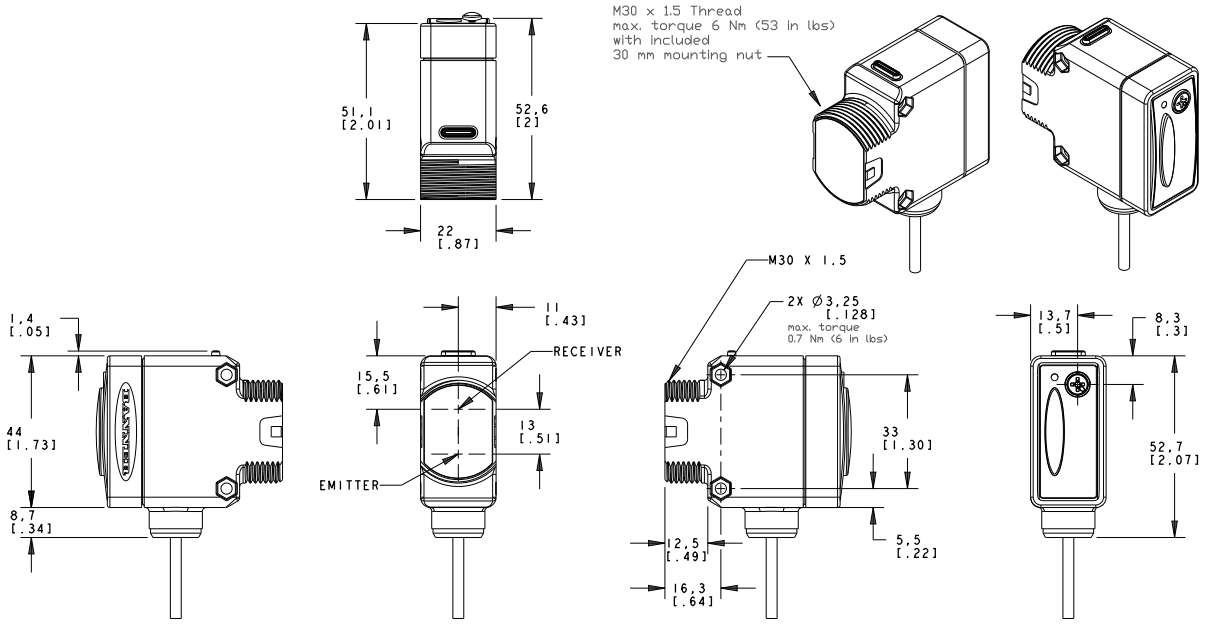

© Banner Engineering Corp. All rights reserved.
www.bannerengineering.com

Chapter Contents

Chapter 2 Wiring

Bipolar Outputs

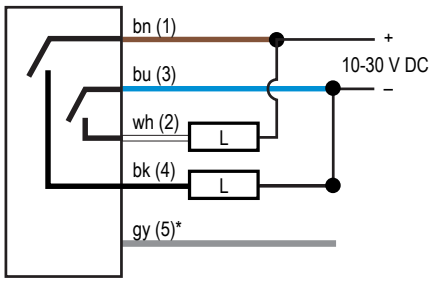

Key:

1 = Brown

2 = White

3 = Blue

4 = Black

5 = Gray (Input*)

L = Load

*Inputs	
or	LO (default)
–	DO
–	Remote Configuration

© Banner Engineering Corp. All rights reserved.
www.bannerengineering.com

Chapter Contents

Sensor Orientation 9
Sensor Setup for Light Operate Background Suppression Mode 9
Setup Example 10
Remote Configuration 10
End-of-Travel (EOT) Indicator LED 11
Output States 11

Chapter 3 Configuration Instructions

Sensor Orientation

To ensure reliable detection, orient the sensor as shown in relation to the target to be detected.

Optimal Orientation of Target to Sensor

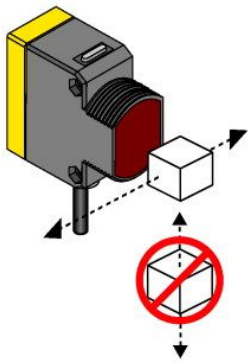

Sensor Setup for Light Operate Background Suppression Mode

In light operate (LO) mode, the output is ON when the target returns the same or more light to the sensor and OFF when the sensor detects less light than the configured/taught target.

1. Mount the sensor with the darkest object at the longest application distance (the distance to object must be less than shown in "Figure: Minimum separation distance* between object and background: background suppression mode" on page 5 for your object color).
2. Turn the adjustment pot **counter-clockwise** until it clicks and EOT LED turns **on red** (4 turns).
3. Turn the adjustment pot **clockwise** until the yellow indicator turns **on**.
4. Replace the darkest object with the brightest background at the closest application distance.
5. Turn the adjustment pot **clockwise**, counting the revolutions, until the Yellow Output LED turns **on**.
6. Turn the adjustment pot **counter-clockwise** half the number of turns from step 5. This will place the cutoff distance midway between the object and the background switchpoints (See Figure at right).

Set cutoff distance approximately midway between the farthest target and the closest background

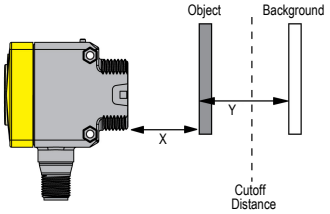

X: Distance to Object

Y: Minimum Separation Between Object and Background

© Banner Engineering Corp. All rights reserved.
www.bannerengineering.com

Setup Example

Background Suppression Mode Application Example
Background Suppression Mode: Objects beyond the set cutoff distance will not be detected. Background suppression mode can be used in most situations with varying object color and position or with varying background conditions.

To ensure reliable background suppression, a minimum separation distance between the object and the background is necessary. See "Figure: Minimum separation distance* between object and background: background suppression mode" on page 5 to determine the minimum separation distance.

Example: An object with a reflectivity similar to black paper is set 300 mm away from the sensor. A background with reflectivity similar to white paper is set 350 mm away from the sensor. According to "Figure: Minimum separation distance* between object and background: background suppression mode" on page 5, the minimum separation distance between the object and the background is 20 mm. In this application, reliable detection will be achieved when set up according to the procedure outlined in Sensor Setup - Background Suppression Mode.

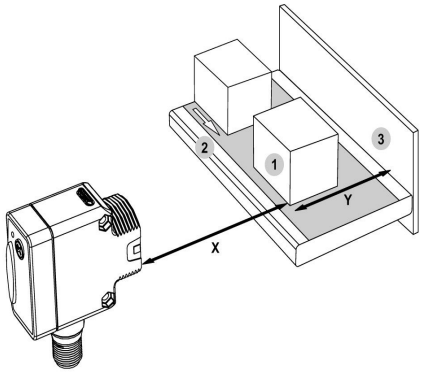

1. Object
2. Conveyor
3. Background

X: Distance to Object = 300 mm

Y: Minimum Separation Between Object and Background > 20 mm

Remote Configuration

The Remote Configuration function may be used to SET the sensor's cutoff distance remotely or to disable the cutoff distance adjustment screw for security. Connect the gray/Input wire of the sensor to ground (0 V DC), with a remote switch connected between them. Pulse the gray/Input wire according to the diagrams in the configuration procedures.

The duration of each button click or remote input pulse is defined as T, where T is: 0.04 s < T < 0.8 s.

Connecting the gray/Input wire

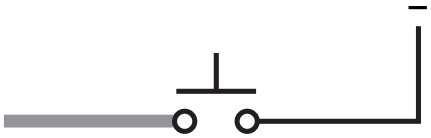

Object SET

The distance to the target object is sampled; the sensor optimizes the cutoff distance beyond the distance to the target object. In RUN mode, objects located between the minimum sensing range and the cutoff distance are sensed; anything beyond the cutoff distance (e.g., other objects or background surfaces) is ignored.

Step	Procedure	Result
Sample Target Object	Present target object Single-pulse the gray/Input wire 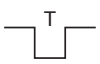	Green Power and Amber Light Sensed LEDs flash alternately 3 times (EOT LED alternately flashes Red/Blue 3 times at the same time)

Continued on page 11

© Banner Engineering Corp. All rights reserved.
www.bannerengineering.com

Continued from page 10

Step	Procedure	Result
Return to Run Mode	Sensor returns automatically to RUN mode	**SET accepted:** Sensor returns directly to RUN mode **SET failed:** Feedback is displayed for 2 seconds (Yellow Light Sensed LED OFF, Green Power LED flashes 4 times)

Cutoff Distance Adjustment Screw Disable/Enable

Step	Procedure	Result
Disable	Quad-pulse the gray/Input wire 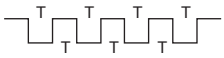	EOT LED flashes Red 4 times Cutoff point adjustment screw disabled
Enable	Quad-pulse the gray/Input wire 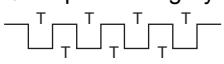	EOT LED flashes Blue 4 times Cutoff point adjustment screw enabled

End-of-Travel (EOT) Indicator LED

Cutoff Distance Adjustment Screw Status	Result
Cutoff distance adjustment screw in between max. and min. end-of-travel limits	EOT LED OFF
Cutoff distance adjustment screw turned clockwise to max. end-of-travel limit	EOT LED ON Blue
Cutoff distance adjustment screw turned counter-clockwise to min. end-of-travel limit	EOT LED ON Red
Cutoff distance adjustment screw turned while disabled	EOT LED alternately flashes Red/Blue 4 times

Output States

Background suppression mode

Output	Object Inside Minimum Sensing Range	Object Between Minimum Sensing Range and Cutoff Distance		Object Beyond Cutoff Distance	
		LO	DO	LO	DO
Yellow Output LED	Undefined	ON	OFF	OFF	ON
Black Wire (Pin 4)	Undefined	ON	OFF	OFF	ON
White Wire (Pin 2)	Undefined	ON	OFF	OFF	ON
Yellow Light Sensed LED	Undefined	ON or Flashing (if < 1.5x excess gain)		OFF	

© Banner Engineering Corp. All rights reserved.
www.bannerengineering.com

Chapter Contents

Chapter 4 Quick-Disconnect (QD) Cordsets

5-pin Single-Ended M12 Female Cordsets				
Model	**Length**	**Dimensions (mm)**	**Pinout (Female)**	
BC-M12F5-22-1	1 m (3.28 ft)	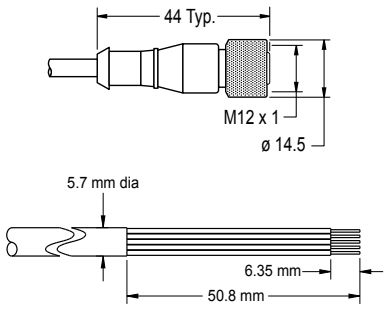	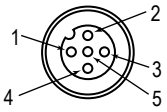	1 = Brown 2 = White 3 = Blue 4 = Black 5 = Gray
BC-M12F5-22-2	2 m (6.56 ft)			
BC-M12F5-22-5	5 m (16.4 ft)			
BC-M12F5-22-8	8 m (26.25 ft)			
BC-M12F5-22-10	10 m (30.81 ft)			
BC-M12F5-22-15	15 m (49.2 ft)			

5-pin Single-Ended M12 Female Right-Angle Cordsets				
Model	**Length**	**Dimensions (mm)**	**Pinout (Female)**	
BC-M12F5A-22-1	1 m (3.28 ft)	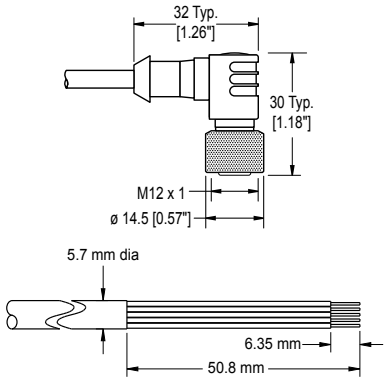	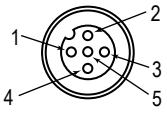	1 = Brown 2 = White 3 = Blue 4 = Black 5 = Gray
BC-M12F5A-22-2	2 m (6.56 ft)			
BC-M12F5A-22-5	5 m (16.4 ft)			
BC-M12F5A-22-8	8 m (26.25 ft)			
BC-M12F5A-22-10	10 m (30.81 ft)			
BC-M12F5A-22-15	15 m (49.2 ft)			

© Banner Engineering Corp. All rights reserved.
www.bannerengineering.com

Chapter Contents

Repairs 13
Contact Us 13
Banner Engineering Corp Limited Warranty 13

Chapter 5 Product Support and Maintenance

Repairs

Contact Banner Engineering for troubleshooting of this device. **Do not attempt any repairs to this Banner device; it contains no field-replaceable parts or components.** If the device, device part, or device component is determined to be defective by a Banner Applications Engineer, they will advise you of Banner's RMA (Return Merchandise Authorization) procedure.

> **IMPORTANT:** If instructed to return the device, pack it with care. Damage that occurs in return shipping is not covered by warranty.

Contact Us

Banner Engineering Corp. | 9714 Tenth Avenue North | Plymouth, MN 55441, USA | Phone: + 1 888 373 6767

For worldwide locations and local representatives, visit www.bannerengineering.com.

Banner Engineering Corp Limited Warranty

Banner Engineering Corp. warrants its products to be free from defects in material and workmanship for one year following the date of shipment. Banner Engineering Corp. will repair or replace, free of charge, any product of its manufacture which, at the time it is returned to the factory, is found to have been defective during the warranty period. This warranty does not cover damage or liability for misuse, abuse, or the improper application or installation of the Banner product.

THIS LIMITED WARRANTY IS EXCLUSIVE AND IN LIEU OF ALL OTHER WARRANTIES WHETHER EXPRESS OR IMPLIED (INCLUDING, WITHOUT LIMITATION, ANY WARRANTY OF MERCHANTABILITY OR FITNESS FOR A PARTICULAR PURPOSE), AND WHETHER ARISING UNDER COURSE OF PERFORMANCE, COURSE OF DEALING OR TRADE USAGE.

This Warranty is exclusive and limited to repair or, at the discretion of Banner Engineering Corp., replacement. **IN NO EVENT SHALL BANNER ENGINEERING CORP. BE LIABLE TO BUYER OR ANY OTHER PERSON OR ENTITY FOR ANY EXTRA COSTS, EXPENSES, LOSSES, LOSS OF PROFITS, OR ANY INCIDENTAL, CONSEQUENTIAL OR SPECIAL DAMAGES RESULTING FROM ANY PRODUCT DEFECT OR FROM THE USE OR INABILITY TO USE THE PRODUCT, WHETHER ARISING IN CONTRACT OR WARRANTY, STATUTE, TORT, STRICT LIABILITY, NEGLIGENCE, OR OTHERWISE.**

Banner Engineering Corp. reserves the right to change, modify or improve the design of the product without assuming any obligations or liabilities relating to any product previously manufactured by Banner Engineering Corp. Any misuse, abuse, or improper application or installation of this product or use of the product for personal protection applications when the product is identified as not intended for such purposes will void the product warranty. Any modifications to this product without prior express approval by Banner Engineering Corp will void the product warranties. All specifications published in this document are subject to change; Banner reserves the right to modify product specifications or update documentation at any time. Specifications and product information in English supersede that which is provided in any other language. For the most recent version of any documentation, refer to: www.bannerengineering.com.

For patent information, see www.bannerengineering.com/patents.

© Banner Engineering Corp. All rights reserved.
www.bannerengineering.com

LinkedIn

X (formerly Twitter)

Facebook



© 2025. All rights reserved.
www.bannerengineering.com