P4 Node Features

The Sure Cross® wireless system is a radio frequency network with integrated I/O that operates in most environments to eliminate the need for wiring runs.



- Wireless industrial I/O device with four 3-wire Pt100 RTDs; other types available with configuration
- Selectable transmit power levels of 250 mW or 1 Watt for 900 MHz models and 65 mW for 2.4 GHz models
- *Flex*Power® power options allow for 10 V DC to 30 V DC, solar, and battery power sources for low-power applications.
- DIP switches for user configuration
- Frequency Hopping Spread Spectrum (FHSS) technology ensures reliable data delivery
- Transceivers provide bidirectional communication between the Gateway and Node, including fully acknowledged data transmission
- Lost RF links are detected and relevant outputs set to user-defined conditions

For additional information, updated documentation, and a list of accessories, refer to Banner Engineering's website, www.bannerengineering.com.

P4 Node Models

Models	Frequency	Power	Housing	I/O
DX80N9X1S-P4E	900 MHz ISM Band	10 to 30 V DC or integrated battery	IP65, NEMA 4X	**Inputs**: Four 3-wire RTDs
DX80N2X1S-P4E	2.4 GHz ISM Band			

Configuration Instructions

Setting Up Your Wireless Network

To set up and install your wireless network, follow these steps.

For complete instructions, including binding, configuration, installation, weatherproofing, device menu maps, troubleshooting, and a list of accessories, refer to Sure Cross® Wireless I/O Network Instruction Manual (p/n 132607)

1. Disconnect the power from your Sure Cross® devices.
2. Configure the DIP switches of all devices. DIP switch configurations are always listed in the product's datasheet.
3. If your device has I/O, connect the sensors to the Sure Cross devices. Available I/O is always listed in the product's datasheet. If your device does not have I/O, skip this step.
4. Refer to the wiring diagrams to apply power to all devices.
    - For housed models, the Gateway's LED 1 is solid green and the Node's LED 2 flashes red to indicate there is no radio link to the Gateway.
    - For board-level models, the Gateway's LED is solid green and the Node's LED flashes red to indicate there is no radio link to the Gateway.
5. Form the wireless network by binding the Nodes to the Gateway.
6. Observe the LED behavior to verify the devices are communicating with each other.
    - For housed models, the Gateway's LED 1 is solid green and the Node's LED 1 flashes green to indicate it is communicating with the Gateway.
    - For board-level models, the Gateway's LED is solid green and the Node's LED flashes green to indicate it is communicating with the Gateway.
7. Configure any I/O points to use the sensors connected to the Sure Cross devices.
8. Conduct a site survey between the Gateway and Nodes.
9. Install your wireless sensor network components.

Configure the DIP Switches

Before changing DIP switch positions, disconnect the power[1]. Any changes made to the DIP switches are not recognized until after power is cycled to the device. For parameters not set using the DIP switches, use the configuration software to make configuration changes. For parameters set using the DIP switches, the DIP switch positions override any changes made using the configuration software.

[1] For devices powered by batteries integrated into the housing, triple-click button 2, then double-click button 2 to reset the device without removing the battery.

© Banner Engineering Corp.

ПРОМЭЛЕКТРОНИКА/ sales@prom-elec.com

Access the Internal DIP Switches

Follow these steps to access the internal DIP switches.

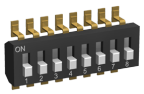

1. Unscrew the four screws that mount the cover to the bottom housing.
2. Remove the cover from the housing without damaging the ribbon cable or the pins the cable plugs into.
3. Gently unplug the ribbon cable from the board mounted into the bottom housing. Skip this step if there is no ribbon cable (integrated battery models) or the ribbon cable is glued down (for C housing models).
4. Remove the black cover plate from the bottom of the device's cover.
   The DIP switches are located behind the rotary dials.
5. Make the necessary changes to the DIP switches.
6. Place the black cover plate back into position and gently push into place.
7. If necessary, plug the ribbon cable in after verifying that the blocked hole lines up with the missing pin.
8. Mount the cover back onto the housing.

DIP Switch Settings (RTD)

	Switches							
Device Settings	**1**	**2**	**3**	**4**	**5**	**6**	**7**	**8**
Transmit power level: 1 Watt (30 dBm)	OFF*							
Transmit power level: 250 mW (24 dBm), DX80 compatibility mode	ON							
Modbus or UCT configured (overrides DIP switches)		OFF*						
DIP switch configured		ON						
Temp °Fahrenheit			OFF*					
Temp °Celsius			ON					
High resolution (0.1 degree) [1]				OFF*				
Low resolution (1 degree)				ON				
Platinum, 100 ohm (European, DIN 43760)					OFF*	OFF*	OFF*	
Unused					OFF	OFF	ON	
Copper, 10 ohm (alpha = 0.00427)					OFF	ON	OFF	
Unused					OFF	ON	ON	
Unused					ON	OFF	OFF	
Unused					ON	OFF	ON	
Unused					ON	ON	OFF	
Unused					ON	ON	ON	

* Default configuration

Modbus/Software or DIP Switch Configured

In Modbus/Software Configured mode, use the DX80 Performance Configuration Software or a Modbus command to change the device parameters. DIP switch positions 3 through 8 are ignored. In DIP Switch Configured mode, use the DIP switches to configure the parameters listed in the table.

RTD Type

Use DIP switches 5, 6, and 7 to select the RTD type. The default position is the OFF position for all switches, setting the RTD to a Platinum 100 ohm type.

Temperature Resolution

When set to high resolution, temperature values are stored to the nearest tenth (0.1) of a degree (default position). To measure temperatures above 1600 degrees Fahrenheit or 1600 degrees Celsius, switch the DIP switch to the ON position and use low resolution mode. In high resolution, the device cannot store values larger than 1600.

[1] In high resolution mode, the temperature = (Modbus register value) ÷ 20. In low resolution mode, the temperature = (Modbus register value) ÷ 2.

© Banner Engineering Corp. All rights reserved.

Temperature Units

Use the DIP switch to specify if the temperature is stored in degrees Fahrenheit or Celsius. The default position is OFF, setting the temperature to Fahrenheit. For Celsius measurements, set this switch to the ON position.

Transmit Power Levels

The 900 MHz radios have a high output option that will transmit at 1 Watt (30 dBm) or 500 mW (27 dBm). There is a low output option for each that will transmit at 250 mW (24 dBm). The 250 mW mode reduces the radio's range but improves the battery life in short-range applications. For 2.4 GHz models, this DIP switch is disabled. The transmit power for 2.4 GHz is fixed at about 65 mW EIRP (18 dBm).

Mixing Performance and Non-Performance (150 mW) Radios in the Same Network

To comply with federal regulations, the 150 mW radios and 1 Watt radios communicate differently. All Performance models offer the ability to select between 250 mW and 1 Watt operation using the DIP switches.

To mix Performance radios with non-Performance radios, refer to the product datasheet and:

- Operate Performance radios in 250 mW mode, not 1 Watt mode
- Set non-Performance (150 mW) radios to use Extended Address Mode

The 150 mW, 250 mW, and 1 Watt networks operate when collocated, but verify the antenna separation distance between a Gateway and Node or between two Gateways is at least 10 feet apart. For more detailed instructions about setting up your wireless network, refer to the following documents:

- DX80 Performance Quick Start Guide (p/n 128185)
- DX80 Performance Wireless I/O Network Instruction Manual (p/n 132607)
- DXM Quick Start Guide (p/n 191247)
- DXM Instruction Manuals (DXM100-Bx: 190037 and DXM150-Bx: 190038)

Wire Your Sure Cross Device

Use the following wiring diagrams to first wire the sensors and then apply power to the Sure Cross® devices.

Terminal Block (E Housing)

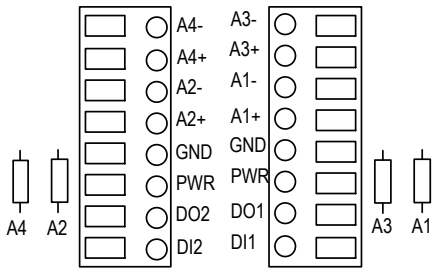

A*x*+ and A*x*–. Analog IN *x*. Analog inputs for devices requiring more than one connection, such as thermocouples or RTDs. When there is no A*x*–, use A*x*+ as an analog input.
DI*x*. Discrete IN *x*
DO*x*. Discrete OUT *x*
GND. Ground/DC common connection
PWR. 10 V DC to 30 V DC power connection

Wiring Diagram for RTD Inputs

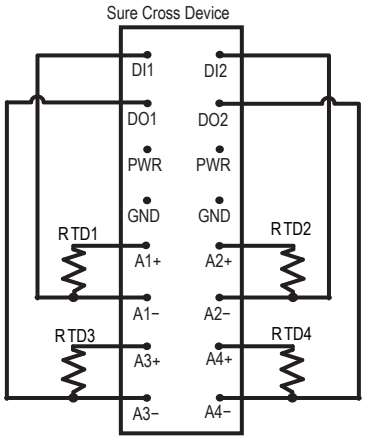

© Banner Engineering Corp. All rights reserved.

Apply Power to the DX80...E Radios

Connecting power to the communication pins will cause permanent damage. The integrated battery DX80...E radios may also be powered by 10 V DC to 30 V DC. The power for the sensors can be supplied by the radio's SPx terminals or from the 10 V DC to 30 V DC used to power the radio. The BAT connection is a low voltage connection to the internal battery. Remove the internal battery if a low voltage source is connected to the BAT terminal. When powering the device from the integrated battery, the BAT connection must remain open.

		Integrated battery (RS-485) for P1E, M-H1E, M-H12E, and P16E Models	Integrated battery (RS-232) for P3E, P4E, M-H3E, and M-H4E Models
	1	10 V DC to 30 V DC (optional)	10 V DC to 30 V DC (optional)
	2	RS-485 / D1 / B / +	RS-232 Tx
	3	DC common (GND)	DC common (GND)
	4	RS-485 / D0 / A / -	RS-232 Rx

Supported RTD Types

The RTD Node supports up to four 3-wire RTD inputs by default. Additional types are available with configuration.

RTDs	Range °F	Range °C
Pt100 (DIN 0.00385)	–328 to 900 °F	–200 to 482 °C
Cu 10 Ohm (alpha = 0.00427) [1]	–328 to 500 °F	–200 to 260 °C

LED Behavior for the Two LED Nodes

Nodes do not sample inputs until they are communicating with the Gateway.

The radios and antennas must be a minimum distance apart to function properly. Recommended minimum distances are:
- 900 MHz 150 mW and 250 mW radios: 6 feet
- 900 MHz 1 Watt radios: 15 feet
- 2.4 GHz 65 mW radios: 1 foot

LED behavior for the Nodes

LED 1	LED 2	Node Status
Flashing green		Radio Link Ok
Flashing red	Flashing red	Device Error
	Flashing red, 1 per 3 sec	No Radio Link

DX80 Performance Configuration Software

The configuration software offers an easy way to link I/O points in your wireless network, view I/O register values, and set system communication parameters when a host system is not part of the wireless network. The software runs on any computer with the Windows Vista, Windows 7, Windows 8, or Windows 10 operating system.

[1] For the copper RTD, the best accuracy is when measuring between −50 to +150 °C (−58 to +302 °F). Below this range, expect errors approaching 3% of reading. Above this range, expect errors approaching 0.5% of reading.

© Banner Engineering Corp. All rights reserved.

Device Configuration screen

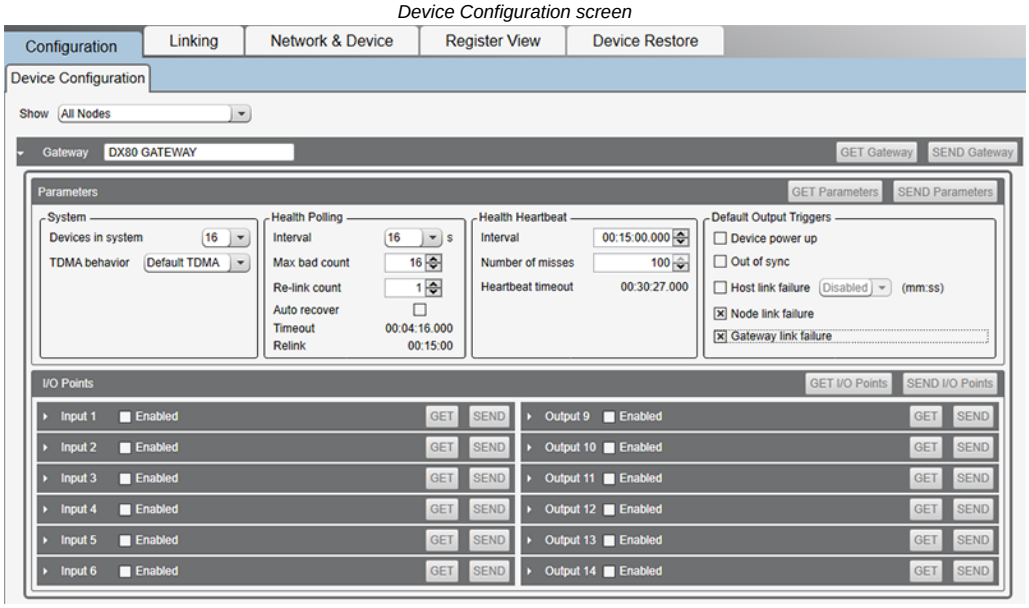

Use a USB to RS-485 adapter cable to connect a standalone DX80 Gateway to the computer. For DXM Controllers with an internal DX80 radio, connect a computer to the DXM Controller using the supplied USB or Ethernet connection. Download the most recent revisions of the configuration software from Banner Engineering's website: https://www.bannerengineering.com/us/en/products/wireless-sensor-networks/reference-library/software.html.

The USB to RS-485 adapter cable is not required for the DXM Controller. For standalone DX80 Gateway devices use:

- USB to RS-485 adapter cable model **BWA-UCT-900** for 1 Watt radios
- USB to RS-485 adapter cable model **BWA-HW-006** for all other radios

Installing Your Sure Cross® Radios

Please refer to one of these instruction manuals to install your wireless network components.

- DX80 Performance Wireless I/O Network Instruction Manual: 132607
- MultiHop Data Radio Instruction Manual: 151317

Holding Registers (High Resolution Mode)

In high resolution mode, the temperature = (Modbus register value) ÷ 20. In low resolution mode, the temperature is (Modbus register value) ÷ 2. Temperature values are stored as signed values in the Modbus register. A 0 in the register is interpreted as 0°; and -32767 (65535 unsigned) in the register (0xFFFF) is interpreted as −1 ÷ 20 = −0.05° in high resolution mode and −1 ÷ 2 = −0.5° in low resolution mode.

Modbus Registers		EIP Registers		I/O Type	I/O Range		Holding Register Representation (Dec)		Terminal Block Labels
Gateway	Node	Node			Min.	Max.	Min.	Max.	
1	1 + (Node# × 16)	0 + (Node# × 8)	Instance 100 / N7						
2	2 + (Node# × 16)	1 + (Node# × 8)							
3	3 + (Node# × 16)	2 + (Node# × 8)		RTD 1 (°F/°C)	–1638.3	+1638.4	–32768	32767	A1+/A1-/DI1
4	4 + (Node# × 16)	3 + (Node# × 8)		RTD 2 (°F/°C)					A2+/A2-/DI2
5	5 + (Node# × 16)	4 + (Node# × 8)		RTD 3 (°F/°C)					A3+/A3-/DO1
6	6 + (Node# × 16)	5 + (Node# × 8)		RTD 4 (°F/°C)					A4+/A4-/DO2
7	7 + (Node# × 16)	6 + (Node# × 8)		Reserved					
8	8 + (Node# × 16)	7 + (Node# × 8)		Device Message					
	...		Instance 112 / N14						
15	15 + (Node# × 16)	6 + (Node# × 8)		Control Message					
16	16 + (Node# × 16)	7 + (Node# × 8)		Reserved					

Storage and Sleep Modes

Storage Mode (applies to battery-powered models only)—While in **storage mode**, the radio does not operate. To put any integrated battery Sure Cross® radio into storage mode, press and hold button 1 for five seconds. To wake the device, press and hold button 1 for five

© Banner Engineering Corp. All rights reserved.

seconds. The radio is in storage mode when the LEDs stop blinking, but in some models, the LCD remains on for an additional minute after the radio enters storage mode. After a device has entered storage mode, you must wait one minute before waking it.

Sleep Mode (applies to both battery and 10–30 V DC powered models)—During normal operation, the Sure Cross radio devices enter **sleep mode** after 15 minutes of operation. The radio continues to function, but the LCD goes blank. To wake the device, press any button.

Install or Replace the Battery on a DX80E Model

Follow these steps to replace the lithium "D" cell battery or batteries in any DX80E model.

1. Remove the four screws mounting the face plate to the housing and remove the face plate. If there is a radio cover on the faceplate, do not remove the radio cover from the faceplate.
2. If applicable, remove the discharged battery or batteries.
3. Install the new battery or batteries.
4. Verify the positive and negative terminals align to the positive and negative terminals of the battery holder mounted within the case.
5. Allow up to 60 seconds for the device to power up.
6. Properly dispose of used batteries according to local regulations by taking it to a hazardous waste collection site, an e-waste disposal center, or other facility qualified to accept lithium batteries.

CAUTION: There is a risk of explosion if the battery is replaced incorrectly.



For outside or high humidity environments, dielectric grease may be applied to the battery terminals to prevent moisture and corrosion buildup.

As with all batteries, these are a fire, explosion, and severe burn hazard. Do not burn or expose them to high temperatures. Do not recharge, crush, disassemble, or expose the contents to water.

For non-hazardous locations, the replacement battery is model **BWA-BATT-011**. For non-hazardous or hazardous locations, the replacement battery is Xeno model XL-205F, Banner model **BWA-BATT-001**. For pricing and availability, contact Banner Engineering.

Specifications

Radio Specifications for Performance Models

Supplied Antenna

A 2 dB antenna ships with this device. High-gain antennas are available, but the transmit power and range depends on the antenna gain, environment, and line of sight. Always verify your wireless network's range by performing a Site Survey.

Radio Transmit Power (900 MHz, 1 Watt radios)

Conducted: 30 dBm (1 W)

EIRP with the supplied 2 dB antenna: < 36 dBm

Radio Transmit Power (2.4 GHz radios)

Conducted: < 18 dBm (65 mW)

EIRP with the supplied 2 dB antenna: < 20 dBm (100 mW)

Radio Range

900 MHz (in 1 Watt mode): Up to 9.6 km (6 miles) with the supplied 2 dB antenna

2.4 GHz: Up to 3.2 km (2 miles) with the supplied 2 dB antenna

Antenna Minimum Separation Distance

900 MHz (1 Watt): 4.57 m (15 ft) with the supplied 2 dB antenna

2.4 GHz (65 mW): 0.3 m (1 ft) with the supplied 2 dB antenna

Link Timeout (Performance)

Gateway: Configurable via User Configuration Software

Node: Defined by Gateway

Spread Spectrum Technology

FHSS (Frequency Hopping Spread Spectrum)

Antenna Connection

Ext. Reverse Polarity SMA, 50 Ohms

Max Tightening Torque: 0.45 N·m (4 lbf·in)

900 MHz Compliance (SX7023EXT Radio Module)

Radio module is indicated by the product label marking

Contains FCC ID: UE3SX7023EXT: FCC Part 15, Subpart C, 15.247

Contains IC: 7044A-SX7023EXT

900 MHz Compliance (RM1809 Radio Module)

Radio module is indicated by the product label marking

Contains FCC ID: UE3RM1809: FCC Part 15, Subpart C, 15.247

Contains IC: 7044A-RM1809

IFT: RCPBARM13-2283

2.4 GHz Compliance (DX80-2400 Radio Module)

Radio module is indicated by the product label marking

Contains FCC ID: UE300DX80-2400: FCC Part 15, Subpart C, 15.247

Radio Equipment Directive (RED) 2014/53/EU

Contains IC: 7044A-DX8024

ANATEL: 15966-21-04042

© Banner Engineering Corp. All rights reserved.

2.4 GHz Compliance (SX243 Radio Module)

Radio module is indicated by the product label marking

Contains FCC ID: UE3SX243: FCC Part 15, Subpart C, 15.247

Radio Equipment Directive (RED) 2014/53/EU

ETSI/EN: EN 300 328 V2.2.2 (2019-07) [RED HarmStds]

Contains IC: 7044A-SX243

ANATEL: 03737-22-04042

P4 Specifications

Supply Voltage

DX80 and "C" Housing Models: 10 V DC to 30 V DC or 3.6 V DC to 5.5 V DC low power option (Outside the USA: 12 V DC to 24 V DC, ±10% or 3.6 V DC to 5.5 V DC low power option) (1)

"E" Housing Models: 3.6 V DC (internal battery) or 10 to 30 V DC

Power Consumption

900 MHz Consumption: Maximum current draw is < 40 mA and typical current draw is < 30 mA at 24 V DC. (2.4 GHz consumption is less.)

Housing

Polycarbonate housing and rotary dial cover; polyester labels; EDPM rubber cover gasket; nitrile rubber, non-sulphur cured button covers

Weight: 0.26 kg (0.57 lbs)

DX80 and "C" Housing Models: Mounting: #10 or M5 (SS M5 hardware included)

"E" Housing Models: Mounting: 1/4-inch or M7 (SS M7 hardware included)

Max. Tightening Torque: 0.56 N·m (5 lbf·in)

(1) For European applications, power this device from a Limited Power Source as defined in EN 60950-1.

Wiring Access

DX80 Housing Models: Four PG-7, one 1/2-inch NPT, one 5-pin M12 male quick-disconnect connector

"C" Housing Models: External terminals

"E" Housing Models: Two 1/2-inch NPT

Interface

Two bi-color LED indicators

Two buttons

Six character LCD

Certifications

Banner Engineering BV
Park Lane, Culliganlaan 2F bus 3
1831 Diegem, BELGIUM

Turck Banner LTD Blenheim House
Blenheim Court
Wickford, Essex SS11 8YT
GREAT BRITAIN

(CE/UKCA approval only applies to 2.4 GHz models)

Environmental Specifications for the E Housing

Operating Conditions

–40 °C to +85 °C (–40 °F to +185 °F) (Electronics); –20 °C to +80 °C (–4 °F to +176 °F) (LCD)

95% maximum relative humidity (non-condensing)

Radiated Immunity: 10 V/m (EN 61000-4-3)

Shock and Vibration

All models meet IEC 60068-2-6 and IEC 60068-2-27 testing criteria

Shock: 30G 11 ms duration, half sine wave per IEC 60068-2-27

Vibration: 10 Hz to 55 Hz, 0.5 mm peak-to-peak amplitude per IEC 60068-2-6

Environmental Ratings

IP65

Refer to the Sure Cross® DX80 Performance (p/n 132607) or the Sure Cross® MultiHop (p/n 151317) instruction manual for installation and waterproofing instructions.

Operating the devices at the maximum operating conditions for extended periods can shorten the life of the device.

FCC Part 15 Class A for Intentional Radiators

This equipment has been tested and found to comply with the limits for a Class A digital device, pursuant to Part 15 of the FCC Rules. These limits are designed to provide reasonable protection against harmful interference when the equipment is operated in a commercial environment. This equipment generates, uses, and can radiate radio frequency energy and, if not installed and used in accordance with the instruction manual, may cause harmful interference to radio communications. Operation of this equipment in a residential area is likely to cause harmful interference in which case the user will be required to correct the interference at his own expense.

(Part 15.21) Any changes or modifications not expressly approved by the party responsible for compliance could void the user's authority to operate this equipment.

Industry Canada Statement for Intentional Radiators

This device contains licence-exempt transmitters(s)/receiver(s) that comply with Innovation, Science and Economic Development Canada's licence-exempt RSS(s). Operation is subject to the following two conditions:

1. This device may not cause interference.
2. This device must accept any interference, including interference that may cause undesired operation of the device.

Cet appareil contient des émetteurs/récepteurs exemptés de licence conformes à la norme Innovation, Sciences, et Développement économique Canada. L'exploitation est autorisée aux deux conditions suivantes:

1. L'appareil ne doit pas produire de brouillage.
2. L'utilisateur de l'appareil doit accepter tout brouillage radioélectrique subi, même si le brouillage est susceptible d'en compromettre le fonctionnement.

© Banner Engineering Corp. All rights reserved.

Accessories

Mounting Brackets

BWA-BK-020 • Includes two 80-lb pull rare-earth magnet mounts and two #10-32 × 1 inch screw mounts • Used on multiple mounting brackets • 31.75 mm (1.25 inch) diameter	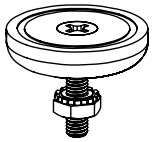

Included with the DX80..E Models

- Mounting hardware kit
- BWA-HW-003: PTFE tape
- BWA-9O2-C (900 MHz) or BWA-2O2-C (2.4 GHz): Antenna, 2 dBd Omni, Rubber Swivel RP-SMA Male. (Not included with Internal antenna models)
- BWA-BATT-001: Replacement battery, 3.6 Volt, "D" Lithium Cell
- BWA-HW-032: Access Hardware for "E" Housing (One each of 1/2-inch plug, 1/2-inch gland)
- Product datasheet and product family Quick Start Guide (128185 for DX80 Gateways or 152653 for MultiHop models)

Warnings

WARNING:
- **Do not use this device for personnel protection**
- Using this device for personnel protection could result in serious injury or death.
- This device does not include the self-checking redundant circuitry necessary to allow its use in personnel safety applications. A device failure or malfunction can cause either an energized (on) or de-energized (off) output condition.

IMPORTANT: Please download the complete Performance P4 Node technical documentation, available in multiple languages, from www.bannerengineering.com for details on the proper use, applications, Warnings, and installation instructions of this device.

IMPORTANT: Por favor descargue desde www.bannerengineering.com toda la documentación técnica de los Performance P4 Node, disponibles en múltiples idiomas, para detalles del uso adecuado, aplicaciones, advertencias, y las instrucciones de instalación de estos dispositivos.

IMPORTANT: Veuillez télécharger la documentation technique complète des Performance P4 Node sur notre site www.bannerengineering.com pour les détails sur leur utilisation correcte, les applications, les notes de sécurité et les instructions de montage.

Install and properly ground a qualified surge suppressor when installing a remote antenna system. Remote antenna configurations installed without surge suppressors invalidate the manufacturer's warranty. Keep the ground wire as short as possible and make all ground connections to a single-point ground system to ensure no ground loops are created. No surge suppressor can absorb all lightning strikes; do not touch the Sure Cross® device or any equipment connected to the Sure Cross® device during a thunderstorm.

Exporting Sure Cross® Radios. It is our intent to fully comply with all national and regional regulations regarding radio frequency emissions. **Customers who want to re-export this product to a country other than that to which it was sold must ensure the device is approved in the destination country.** The Sure Cross wireless products were certified for use in these countries using the antenna that ships with the product. When using other antennas, verify you are not exceeding the transmit power levels allowed by local governing agencies. This device has been designed to operate with the antennas listed on Banner Engineering's website and having a maximum gain of 9 dBm. Antennas not included in this list or having a gain greater than 9 dBm are strictly prohibited for use with this device. The required antenna impedance is 50 ohms. To reduce potential radio interference to other users, the antenna type and its gain should be so chosen such that the equivalent isotropically radiated power (EIRP) is not more than that permitted for successful communication. Consult with Banner Engineering Corp. if the destination country is not on this list.

IMPORTANT:
- **Never operate a radio without connecting an antenna**
- Operating radios without an antenna connected will damage the radio circuitry.
- To avoid damaging the radio circuitry, never apply power to a Sure Cross® Performance or Sure Cross® MultiHop radio without an antenna connected.

IMPORTANT:
- **Electrostatic discharge (ESD) sensitive device**
- ESD can damage the device. Damage from inappropriate handling is not covered by warranty.
- Use proper handling procedures to prevent ESD damage. Proper handling procedures include leaving devices in their anti-static packaging until ready for use; wearing anti-static wrist straps; and assembling units on a grounded, static-dissipative surface.

Banner Engineering Corp Limited Warranty

Banner Engineering Corp. warrants its products to be free from defects in material and workmanship for one year following the date of shipment. Banner Engineering Corp. will repair or replace, free of charge, any product of its manufacture which, at the time it is returned to the factory, is found to have been defective during the warranty period. This warranty does not cover damage or liability for misuse, abuse, or the improper application or installation of the Banner product.

© Banner Engineering Corp. All rights reserved.

THIS LIMITED WARRANTY IS EXCLUSIVE AND IN LIEU OF ALL OTHER WARRANTIES WHETHER EXPRESS OR IMPLIED (INCLUDING, WITHOUT LIMITATION, ANY WARRANTY OF MERCHANTABILITY OR FITNESS FOR A PARTICULAR PURPOSE), AND WHETHER ARISING UNDER COURSE OF PERFORMANCE, COURSE OF DEALING OR TRADE USAGE.

This Warranty is exclusive and limited to repair or, at the discretion of Banner Engineering Corp., replacement. **IN NO EVENT SHALL BANNER ENGINEERING CORP. BE LIABLE TO BUYER OR ANY OTHER PERSON OR ENTITY FOR ANY EXTRA COSTS, EXPENSES, LOSSES, LOSS OF PROFITS, OR ANY INCIDENTAL, CONSEQUENTIAL OR SPECIAL DAMAGES RESULTING FROM ANY PRODUCT DEFECT OR FROM THE USE OR INABILITY TO USE THE PRODUCT, WHETHER ARISING IN CONTRACT OR WARRANTY, STATUTE, TORT, STRICT LIABILITY, NEGLIGENCE, OR OTHERWISE.**

Banner Engineering Corp. reserves the right to change, modify or improve the design of the product without assuming any obligations or liabilities relating to any product previously manufactured by Banner Engineering Corp. Any misuse, abuse, or improper application or installation of this product or use of the product for personal protection applications when the product is identified as not intended for such purposes will void the product warranty. Any modifications to this product without prior express approval by Banner Engineering Corp will void the product warranties. All specifications published in this document are subject to change; Banner reserves the right to modify product specifications or update documentation at any time. Specifications and product information in English supersede that which is provided in any other language. For the most recent version of any documentation, refer to: www.bannerengineering.com.

For patent information, see www.bannerengineering.com/patents.

Notas Adicionales (con Antena)

Información México: La operación de este equipo está sujeta a las siguientes dos condiciones: 1) es posible que este equipo o dispositivo no cause interferencia perjudicial y 2) este equipo debe aceptar cualquier interferencia, incluyendo la que pueda causar su operación no deseada.

Banner es una marca registrada de Banner Engineering Corp. y podrán ser utilizadas de manera indistinta para referirse al fabricante. "Este equipo ha sido diseñado para operar con las antenas tipo Omnidireccional para una ganancia máxima de antena de 6 dBd y Yagi para una ganancia máxima de antena 10 dBd que en seguida se enlistan. También se incluyen aquellas con aprobación ATEX tipo Omnidireccional siempre que no excedan una ganancia máxima de antena de 6dBd. El uso con este equipo de antenas no incluidas en esta lista o que tengan una ganancia mayor que 6 dBd en tipo omnidireccional y 10 dBd en tipo Yagi, quedan prohibidas. La impedancia requerida de la antena es de 50 ohms."

Approved Antennas

- **BWA-9O2-C**--Antena, Omni 902-928 MHz, 2 dBd, junta de caucho, RP-SMA Macho
- **BWA-9O5-C**--Antena, Omni 902-928 MHz, 5 dBd, junta de caucho, RP-SMA Macho
- **BWA-9O6-A**--Antena, Omni 902-928 MHz, 6 dBd, fibra de vidrio, 1800mm, N Hembra
- **BWA-9Y10-A**--Antena, Yagi, 900 MHz, 10 dBd, N Hembra

Mexican Importer

Banner Engineering de Mèxico, S. de R.L. de C.V. | David Alfaro Siqueiros 103 Piso 2 Valle oriente | San Pedro Garza Garcia Nuevo Leòn, C. P. 66269

81 8363.2714

ANATEL

Este equipamento não tem direito à proteção contra interferência prejudicial e não pode causar interferência em sistemas devidamente autorizados. Para maiores informações, consulte o site da ANATEL www.gov.br/anatel/pt-br/

ANATEL
Agência Nacional de Telecomunicações

Document title: Sure Cross® Performance P4 Node
Part number: 155864
Revision: K
Original Instructions
© Banner Engineering Corp. All rights reserved.

155864

© Banner Engineering Corp. All rights reserved.