Features

Pulse Width Modulation (PWM) Intensity Control



- 3-wire dimmers are compatible with PWM models of many Banner LED lights
- 2-wire dimmers are compatible with standard WLS15 models and select indicators
- Intensity control (0 to 100%) on many lights at the same time
- Compact and easy to install
- High-frequency PWM delivers flicker-free lighting

Models

Model	Pulse Width Modulation Type	Connector
LC65P1T	3-wire	Terminal block
LC65P2T	2-wire	
LC65P1Q5	3-wire	(1) 150 mm (6 in) PVC-jacketed cable with a 5-pin M12 female, stainless steel quick-disconnect connector
LC65P2Q5	2-wire	(1) 150 mm (6 in) PVC-jacketed cable with a 4-pin M12 male, stainless steel quick-disconnect connector

Wiring

Quick-Disconnect Models - Male Input

Pinout	Pin	Wire Color	Connection
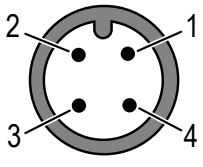	1	Brown	12 V DC to 30 V DC
	2	White	Not used
	3	Blue	DC common
	4	Black	Not used

Quick-Disconnect Models - Female Output

Pinout	Pin	Wire Color	Connection: 2-Wire	Connection: 3-Wire
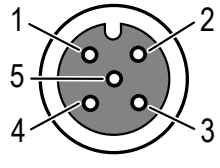	1	Brown	Pulse width modulation (PWM) output	12 V DC to 30 V DC
	2	White	Not used	Not used
	3	Blue	DC common	DC common
	4	Black	Not used	Pulse width modulation (PWM) output
	5	No connection	Not used	Not used

2-Wire Models: LED Light(s) Powered Through the Controller

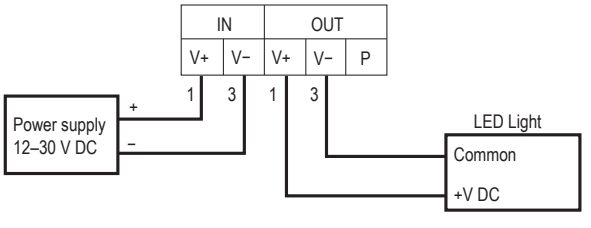

Original Instructions
31-Mar-26

© Banner Engineering Corp. All rights reserved.
www.bannerengineering.com

177086
p/n: 177086 Rev. E

ПРОМЭЛЕКТРОНИКА/ sales@prom-elec.com

3-Wire Models: LED Light(s) Powered Through the Controller

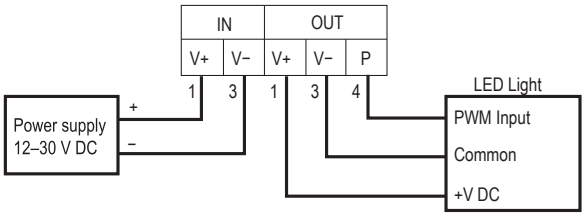

3-Wire Models: LED Light(s) Powered Externally

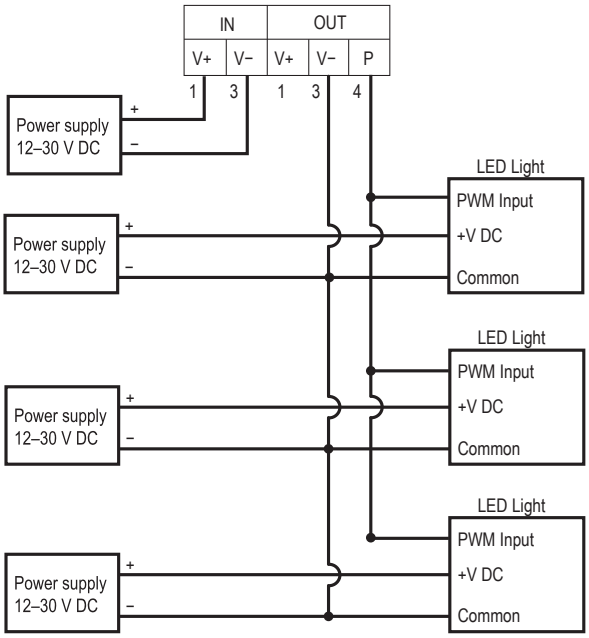

Specifications

Supply Voltage
12 V DC to 30 V DC

Supply Current
30 mA

Maximum Pass-Through Current
4 A

Maximum PWM Output Current
3-Wire Models: 150 mA
2-Wire Models: 4 A

Switching Frequency
300 Hz

Dimming Range
0% to 100%

Adjustments
270° potentiometer

Construction
ABS housing

Indicators
Power LED: Green

Operating Conditions
–20 °C to +60 °C (–4 °F to +140 °F)
95% at +50 °C maximum relative humidity (non-condensing)

Environmental Rating
IP20

Certifications

Banner Engineering BV
Park Lane, Culliganlaan 2F bus 3
1831 Diegem, BELGIUM

Required Overcurrent Protection

WARNING: Electrical connections must be made by qualified personnel in accordance with local and national electrical codes and regulations.

Overcurrent protection is required to be provided by end product application per the supplied table.

Overcurrent protection may be provided with external fusing or via Current Limiting, Class 2 Power Supply.

Supply wiring leads < 24 AWG shall not be spliced.

For additional product support, go to www.bannerengineering.com.

Supply Wiring (AWG)	Required Overcurrent Protection (A)	Supply Wiring (AWG)	Required Overcurrent Protection (A)
20	5.0	26	1.0
22	3.0	28	0.8
24	2.0	30	0.5

© Banner Engineering Corp. All rights reserved.
www.bannerengineering.com

Dimensions

All measurements are listed in millimeters [inches], unless noted otherwise. The measurements provided are subject to change.

Terminal Block Models

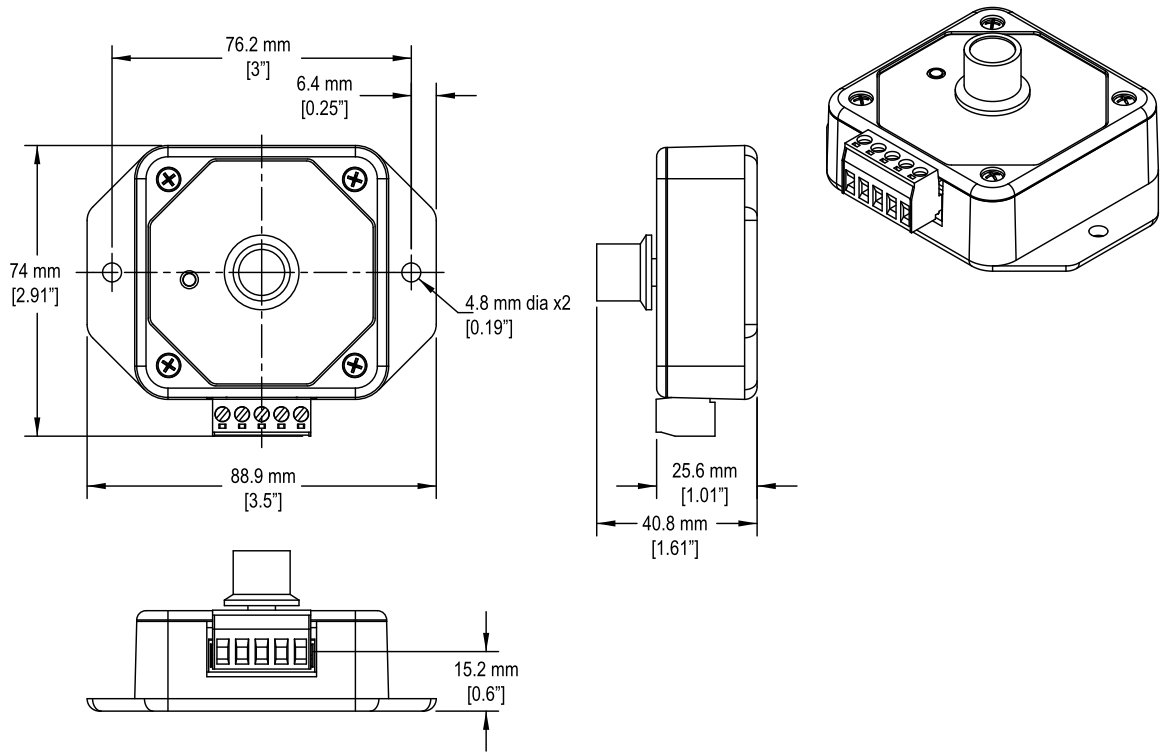

Cabled Models

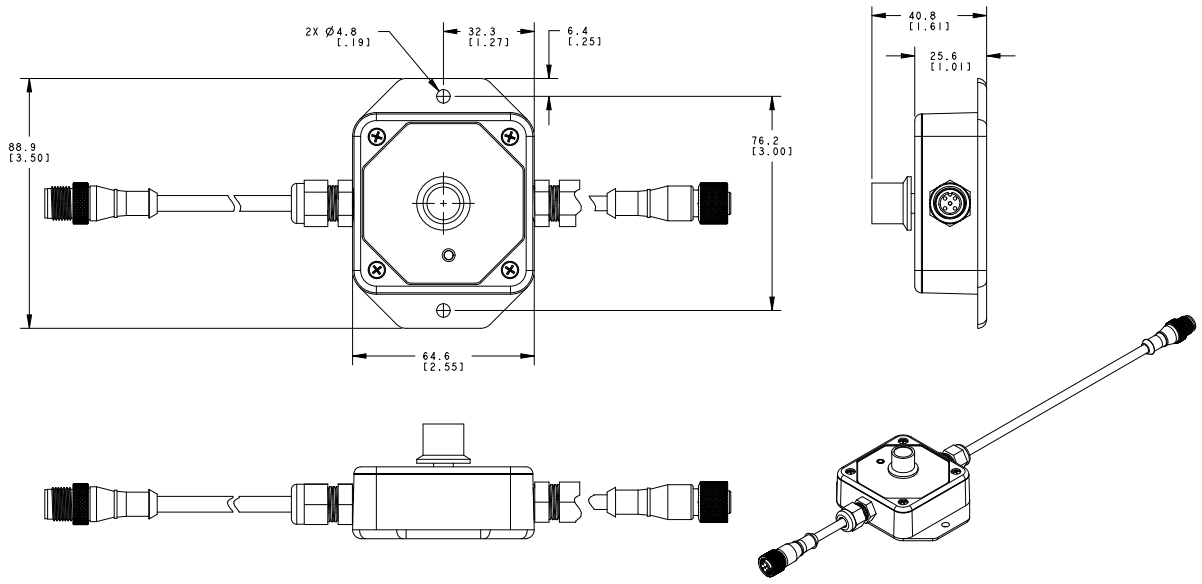

Banner Engineering Corp Limited Warranty

Banner Engineering Corp. warrants its products to be free from defects in material and workmanship for one year following the date of shipment. Banner Engineering Corp. will repair or replace, free of charge, any product of its manufacture which, at the time it is returned to the factory, is found to have been defective during the warranty period. This warranty does not cover damage or liability for misuse, abuse, or the improper application or installation of the Banner product.

THIS LIMITED WARRANTY IS EXCLUSIVE AND IN LIEU OF ALL OTHER WARRANTIES WHETHER EXPRESS OR IMPLIED (INCLUDING, WITHOUT LIMITATION, ANY WARRANTY OF MERCHANTABILITY OR FITNESS FOR A PARTICULAR PURPOSE), AND WHETHER ARISING UNDER COURSE OF PERFORMANCE, COURSE OF DEALING OR TRADE USAGE.

© Banner Engineering Corp. All rights reserved.
www.bannerengineering.com

This Warranty is exclusive and limited to repair or, at the discretion of Banner Engineering Corp., replacement. **IN NO EVENT SHALL BANNER ENGINEERING CORP. BE LIABLE TO BUYER OR ANY OTHER PERSON OR ENTITY FOR ANY EXTRA COSTS, EXPENSES, LOSSES, LOSS OF PROFITS, OR ANY INCIDENTAL, CONSEQUENTIAL OR SPECIAL DAMAGES RESULTING FROM ANY PRODUCT DEFECT OR FROM THE USE OR INABILITY TO USE THE PRODUCT, WHETHER ARISING IN CONTRACT OR WARRANTY, STATUTE, TORT, STRICT LIABILITY, NEGLIGENCE, OR OTHERWISE.**

Banner Engineering Corp. reserves the right to change, modify or improve the design of the product without assuming any obligations or liabilities relating to any product previously manufactured by Banner Engineering Corp. Any misuse, abuse, or improper application or installation of this product or use of the product for personal protection applications when the product is identified as not intended for such purposes will void the product warranty. Any modifications to this product without prior express approval by Banner Engineering Corp will void the product warranties. All specifications published in this document are subject to change; Banner reserves the right to modify product specifications or update documentation at any time. Specifications and product information in English supersede that which is provided in any other language. For the most recent version of any documentation, refer to: www.bannerengineering.com.

For patent information, see www.bannerengineering.com/patents.

© Banner Engineering Corp. All rights reserved.