VS8 Series



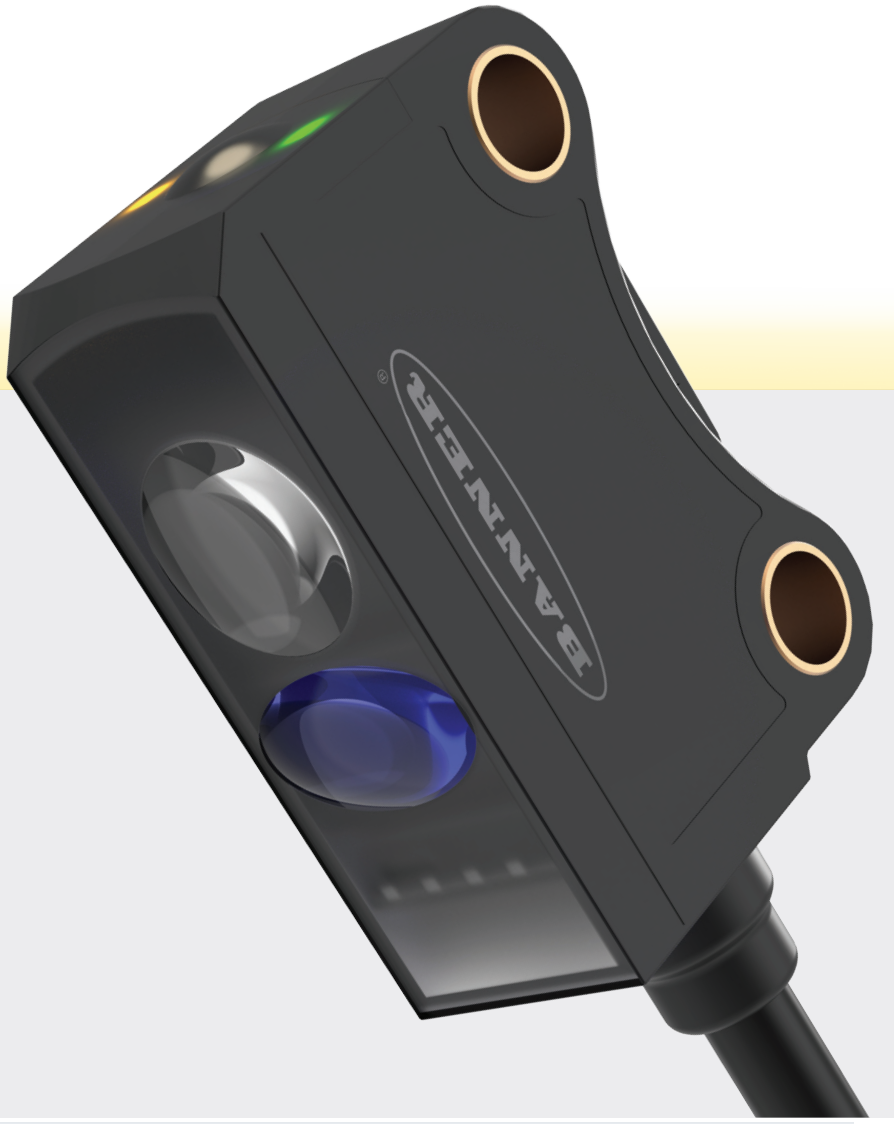

Miniature Sensors

- Installs in the smallest of spaces
- Red laser models provide bright, precise laser light spot for optimum small part detection
- High switching frequency for detection in even the fastest processes
- User-friendly operation using electronic push button or remote input provides reliable and precise detection
- Red laser, Red LED, and Blue LED versions to solve challenging applications
- ECOLAB and IP67

BANNER®

ПРОМЭЛЕКТРОНИКА/ sales@prom-elec.com

Introducing the VS8 Series

Full line of precise small object detection sensors



Opposed

- Red laser provides bright, precise beam spot for small part detection
- Teach input adjusts the switching threshold to optimize for small part detection
- High switching frequency for reliable detection in high speed applications
- Electronic push button or remote input allows easy programming
- Beam inhibit can be used to test if the pair is functioning correctly



Retroreflective

- Red laser models provides bright, precise beam spot for small part detection
- Red LED models provide a cost effective part detection solution
- Works with a variety of reflectors
- Electronic push button or remote input allows easy programming



Adjustable and Fixed Background Suppression

- Red laser models provide bright, precise beam spot for small part detection
- Blue LED models provide detection of dark light-absorbing objects and shiny or glossy objects
- Red LED models provide a cost effective part detection solution
- Reliable detection even with highly reflective objects in the background
- Adjustable range models cover a wide variety of applications with a single model
- Fixed range models ensure easy and consistent operation

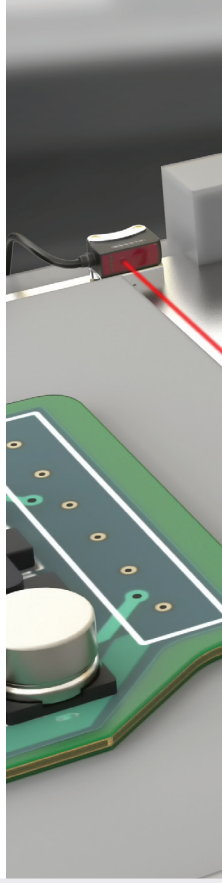

Miniature Size



Actual size shown

Industry Standard Mounting

- 15 mm spacing on mounting holes
- Dovetail mounting option allows ±10° tip/pivot adjustments of the sensor even when installed in tight spaces



Ultra Small Beam Spot

- Can reliably detected an object with a diameter of 0.5 mm at a distance of 70 mm (laser adjustable-field and fixed background suppression models)

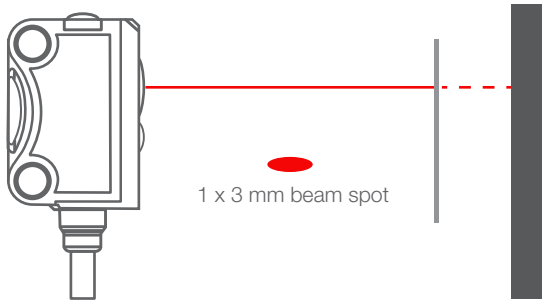

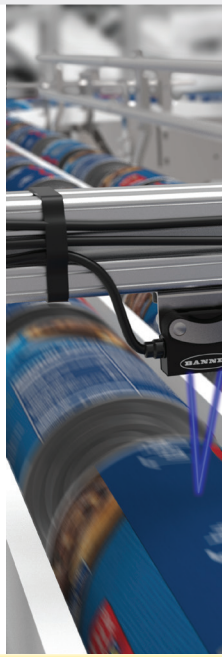

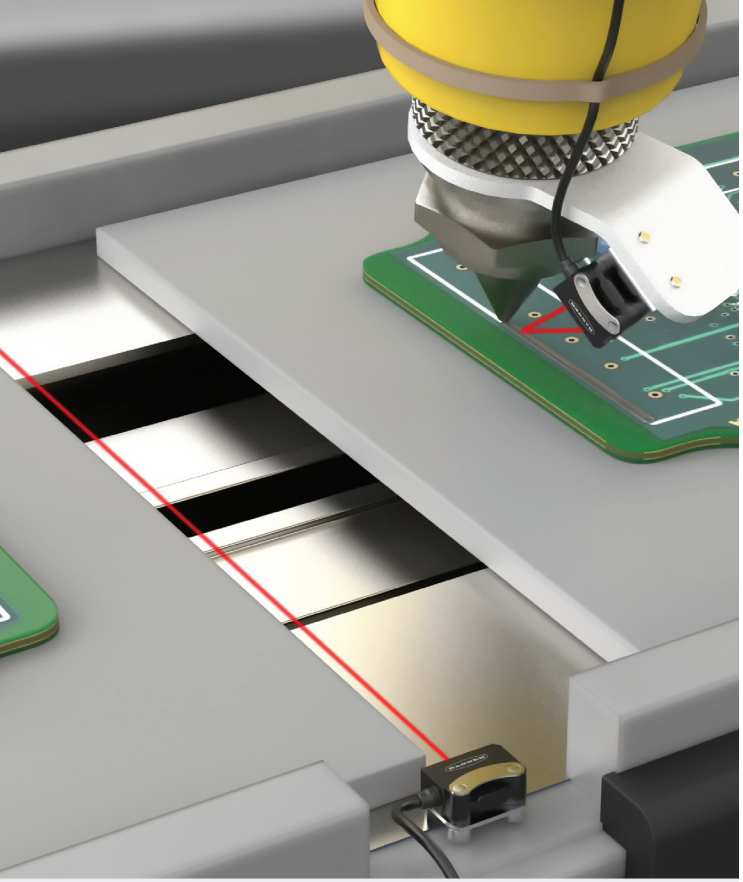



Opposed Mode

Model	Sensing Mode	Range	Output	Connection
VS8LEJ	Red Laser Emitter with Beam Inhibit	0 m to 3 m (0 in to 9.8 ft)	—	2 m (6.5 ft) unterminated 4-wire PUR cable
VS8LEJQ	Red Laser Emitter with Beam Inhibit	0 m to 3 m (0 in to 9.8 ft)	—	200 mm (7.8 in) PUR cable with a 4-pin M8/ Pico-style male quick disconnect (QD)
VS8EAPR	Receiver	0 m to 3 m (0 in to 9.8 ft)	PNP	2 m (6.5 ft) unterminated 4-wire PUR cable
VS8EANR			NPN	
VS8EAPRQ	Receiver	0 m to 3 m (0 in to 9.8 ft)	PNP	200 mm (7.8 in) PUR cable with a 4-pin M8/ Pico-style male quick disconnect (QD)
VS8EANRQ			NPN	

Retroreflective Mode

Model	Sensing Mode	Range	Output	Connection
VS8EAPLP	Red LED Retro Reflective	0.1 m to 1.6 m (3.9 in to 62.9 in) with BRT-2X2	PNP	2 m (6.5 ft) unterminated 4-wire PUR cable
VS8EANLP			NPN	
VS8EAPLPQ	Red LED Retro Reflective	0.1 m to 1.6 m (3.9 in to 62.9 in) with BRT-2X2	PNP	200 mm (7.8 in) PUR cable with a 4-pin M8/ Pico-style male quick disconnect (QD)
VS8EANLPQ			NPN	
VS8EAPLLP	Red Laser Retro Reflective	0.1 m to 2 m (3.9 in to 78.7 in) with BRT-51X51BM	PNP	2 m (6.5 ft) unterminated 4-wire PUR cable
VS8EANLLP			NPN	
VS8EAPLLPQ	Red Laser Retro Reflective	0.1 m to 2 m (3.9 in to 78.7 in) with BRT-51X51BM	PNP	200 mm (7.8 in) PUR cable with a 4-pin M8/ Pico-style male quick disconnect (QD)
VS8EANLLPQ			NPN	

Background Suppression

Model	Sensing Mode	Range	Output	Connection
VS8EAPAF70*	Red LED, Adjustable Background Suppression	5 to 70 mm (0.20 to 2.75 in)	PNP	2 m (6.5 ft) unterminated 4-wire PUR cable
VS8EANAF70*			NPN	
VS8EAPLAF70*	Red Laser, Adjustable Background Suppression	6 to 70 mm (0.24 to 2.75 in)	PNP	2 m (6.5 ft) unterminated 4-wire PUR cable
VS8EANLAF70*			NPN	
VS8APFF30B**	Blue LED, Fixed 30 mm Background Suppression	2 to 30 mm (0.08 to 1.18 in)	PNP	2 m (6.5 ft) unterminated 4-wire PUR cable
VS8ANFF30B**			NPN	
VS8APFF15**	Red LED, Fixed 15 mm Background Suppression	2 to 15 mm (0.08 to 0.59 in)	PNP	2 m (6.5 ft) unterminated 4-wire PUR cable
VS8ANFF15**			NPN	
VS8APFF30**	Red LED, Fixed 30 mm Background Suppression	2 mm to 30 mm (0.08 to 1.18 in)	PNP	2 m (6.5 ft) unterminated 4-wire PUR cable
VS8ANFF30**			NPN	
VS8APFF50**	Red LED, Fixed 50 mm Background Suppression	2 mm to 50 mm (0.08 to 1.97 in)	PNP	2 m (6.5 ft) unterminated 4-wire PUR cable
VS8ANFF50**			NPN	

* To order the 200 mm (7.8 in) PUR cable model with a 4-pin M8/Pico-style quick disconnect, add suffix "Q" to the model number. For example, VS8EAPAF70Q. Only available for AF and LAF models.

To order the 200 mm (7.8 in) PUR cable model with a 4-pin M12/Euro-style quick disconnect, add suffix "Q5" to the model number. For example, VS8EAPAF70Q5. Only available for AF and LAF models.

** To order the 200 mm (7.8 in) PUR cable model with a 3-pin M8/Pico-style quick disconnect, add suffix "Q3" to the model number. For example, VS8APFF15Q3. Only available for FF models.

VS8 Series

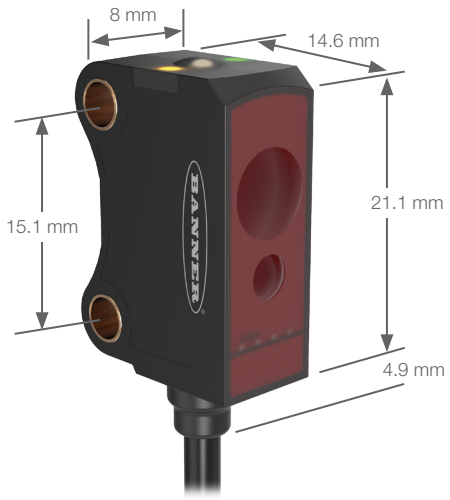

Supply Voltage	LED models: 10 V dc to 30 V dc (10% max. ripple) at less than 20 mA, exclusive of load Laser models: 10 V dc to 30 V dc (10% max. ripple) at less than 12 mA, exclusive of load
Supply Protection Circuitry	Protected against reverse polarity and short-circuit
Output Configuration	Retroreflective and Background Suppression Models: Single PNP or NPN on pin 4 (black wire) with remote input on pin 2 (white wire) Opposed Mode Receivers only: Single PNP or NPN on pin 4 (black wire) with remote input on pin 2 (white wire)
Output Response Time	500 µs
Output Rating	50 mA
Construction	Housing, cable: PUR Front screen: PMMA
Environmental Rating	IEC IP67
Laser Classification	All Models: Class 1 Blue LED Models: Risk Group 2
Operating Conditions	LED models: –20 °C to +60 °C (–4 °F to +140 °F) Laser models: –20 °C to +50 °C (–4 °F to +122 °F) UL Operating Temperature: –20 °C to +30 °C (–4 °F to +86 °F)
Certifications	

Accessories



SMBVS8DT
±10° Pivot



SMBVS8RA
Right-Angle



LED Reflectors	Laser Reflectors
BRT-2X2	BRT-51X51BM
BRT-10BM	BRT-TVAG2x2
BRT-40x18A	BRT-35x35BM



M12 4-Pin Euro-Style
Straight connector models

MQDC-406
2 m (6.5')
MQDC-415
5 m (15')
MQDC-430
9 m (30')
MQDC-450
15 m (50')



M8 Pico-Style
Straight connector models shown. For right-angle models change "G" to "W" (example, PKW4M-2)

3-Pin	4-Pin
PKG3M-2 2 m (6.5')	PKG4M-2 2 m (6.5')
PKG3M-5 5 m (15')	PKG4M-5 5 m (15')
PKG3M-9 9 m (30')	PKG4M-9 9 m (30')

189696 rev. A
© 2018 Banner Engineering Corp. Minneapolis, MN USA

1-888-373-6767
www.bannerengineering.com

BANNER®
more sensors, more solutions