Features

Visible red or infrared backlights in 2 sizes, for use with PresencePLUS® P4 sensors



- Diffused backlight for *Presence*PLUS® P4 sensors
- Continuous light and strobed operation, selectable via sensor software
- Solid-state LED matrix, in two sizes
- Direct connection to PresencePLUS P4 sensor (if sensor is powered by 24V DC)
- Two sizes available; see models table
- Bracket option(s) available for all models

IMPORTANT: Read the following instructions before operating the light. Please download the complete LED..B..W Backlight technical documentation, available in multiple languages, from www.bannerengineering.com for details on the proper use, applications, Warnings, and installation instructions of this device.

IMPORTANT: Lea el siguiente instructivo antes de operar el luminario. Por favor descargue desde www.bannerengineering.com toda la documentación técnica de los LED..B..W Backlight, disponibles en múltiples idiomas, para detalles del uso adecuado, aplicaciones, advertencias, y las instrucciones de instalación de estos dispositivos.

IMPORTANT: Lisez les instructions suivantes avant d'utiliser le luminaire. Veuillez télécharger la documentation technique complète des LED..B..W Backlight sur notre site www.bannerengineering.com pour les détails sur leur utilisation correcte, les applications, les notes de sécurité et les instructions de montage.

Models

Model	LED Color	Wave Length	Active Area
LEDIB70X70M	Infrared	940 nm	71 mm × 71 mm (2.8 in × 2.8 in)
LEDRB70X70M	Visible Red	660 nm	
LEDIB85X220M	Infrared	940 nm	85 mm × 220 mm (3.35 in × 8.67 in)
LEDRB85X220M	Visible Red	660 nm	

To order the 9 m (30 ft) integral cable model, add the suffix "**W/30**" to the model number (for example, **LEDIB70X70M W/30**).

Specifications

Light Source

LED; see models table for wavelengths

Illumination

Diffused for use in applications needing a backlit light source

Supply Voltage and Current

70×70 mm models: 24 V DC at 250 mA maximum

85×220 mm models: 24 V DC at 500 mA maximum

Voltage supplied by PresencePLUS P4 sensors, if operating at 24 V DC (see sensor manual)

See the electrical characteristics on the product label.

Connections

2 m (6.5 ft) or 9 m (30 ft) PUR-jacketed, 3-conductor attached cable

Construction

Low-carbon steel with black zinc plating, acrylic window

Useful Life

10,000 hours (LED ON time). When operated within specifications, output will decrease less than 30% after 10,000 hours and less than 40% after 20,000 hours

Operating Conditions

0 °C to +50 °C (+32 °F to +122 °F)

90% at +50 °C maximum relative humidity (non-condensing)

Certifications

Banner Engineering BV
Park Lane, Culliganlaan 2F bus 3
1831 Diegem, BELGIUM

Original Instructions
15-Jan-26

© Banner Engineering Corp. All rights reserved.
www.bannerengineering.com

116947
p/n: 116947 Rev. F

ПРОМЭЛЕКТРОНИКА/ sales@prom-elec.com

Dimensions

All measurements are listed in millimeters [inches], unless noted otherwise. The measurements provided are subject to change.

Backlight, 70x70 mm model

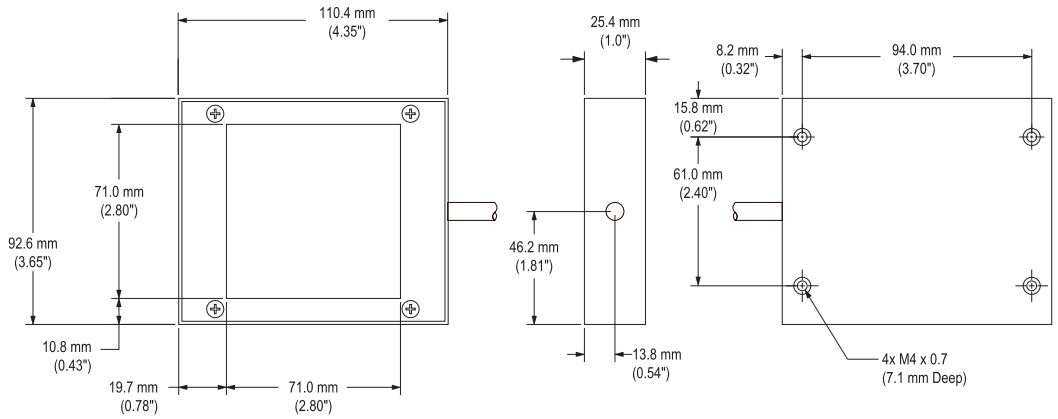

Backlight, 85x220 mm model

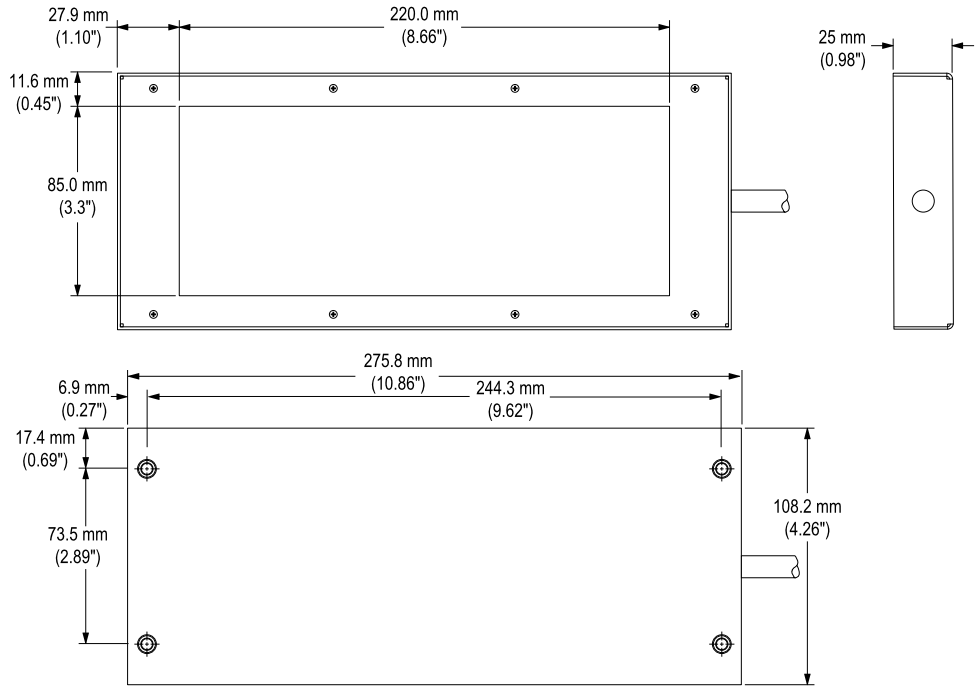

Clean the Light

Regularly remove dust, dirt, or fingerprints from the light source.

1. Blow off dust using anti-static compressed air.
2. If necessary, use a lens cloth and lens cleaner or window cleaner to wipe off remaining debris.

IMPORTANT: Do not use any other chemicals for cleaning the light source.

© Banner Engineering Corp. All rights reserved.
www.bannerengineering.com

Brackets

SMBABM
- 13-ga. zinc-plated low-carbon steel
- (4) M4 Phillips flathead screws included
- For mounting the light from the front
- Accommodates backlight models LED..B70X70..
- CAD Files: DXF, PDF, IGS, STP

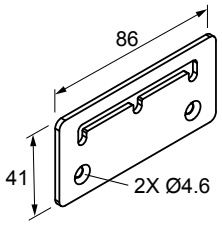

SMBACM
- 14-ga. zinc-plated low-carbon steel
- (4) M4 socket-head cap screws, washers and hex key included
- For mounting the light from the rear
- Accommodates backlight models LED..B70X70..
- CAD Files: DXF, PDF, IGS, STP

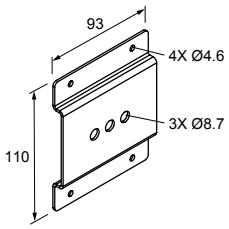

SMBLB
- Accommodates backlight models LED..B85X220..
- CAD Files: DXF, PDF, IGS, STP

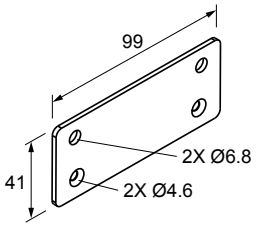

Banner Engineering Corp Limited Warranty

Banner Engineering Corp. warrants its products to be free from defects in material and workmanship for one year following the date of shipment. Banner Engineering Corp. will repair or replace, free of charge, any product of its manufacture which, at the time it is returned to the factory, is found to have been defective during the warranty period. This warranty does not cover damage or liability for misuse, abuse, or the improper application or installation of the Banner product.

THIS LIMITED WARRANTY IS EXCLUSIVE AND IN LIEU OF ALL OTHER WARRANTIES WHETHER EXPRESS OR IMPLIED (INCLUDING, WITHOUT LIMITATION, ANY WARRANTY OF MERCHANTABILITY OR FITNESS FOR A PARTICULAR PURPOSE), AND WHETHER ARISING UNDER COURSE OF PERFORMANCE, COURSE OF DEALING OR TRADE USAGE.

This Warranty is exclusive and limited to repair or, at the discretion of Banner Engineering Corp., replacement. **IN NO EVENT SHALL BANNER ENGINEERING CORP. BE LIABLE TO BUYER OR ANY OTHER PERSON OR ENTITY FOR ANY EXTRA COSTS, EXPENSES, LOSSES, LOSS OF PROFITS, OR ANY INCIDENTAL, CONSEQUENTIAL OR SPECIAL DAMAGES RESULTING FROM ANY PRODUCT DEFECT OR FROM THE USE OR INABILITY TO USE THE PRODUCT, WHETHER ARISING IN CONTRACT OR WARRANTY, STATUTE, TORT, STRICT LIABILITY, NEGLIGENCE, OR OTHERWISE.**

Banner Engineering Corp. reserves the right to change, modify or improve the design of the product without assuming any obligations or liabilities relating to any product previously manufactured by Banner Engineering Corp. Any misuse, abuse, or improper application or installation of this product or use of the product for personal protection applications when the product is identified as not intended for such purposes will void the product warranty. Any modifications to this product without prior express approval by Banner Engineering Corp will void the product warranties. All specifications published in this document are subject to change; Banner reserves the right to modify product specifications or update documentation at any time. Specifications and product information in English supersede that which is provided in any other language. For the most recent version of any documentation, refer to: www.bannerengineering.com.

For patent information, see www.bannerengineering.com/patents.

Mexican Importer

Banner Engineering de Mèxico, S. de R.L. de C.V. | David Alfaro Siqueiros 103 Piso 2 Valle oriente | San Pedro Garza Garcia Nuevo Leòn, C. P. 66269

81 8363.2714

© Banner Engineering Corp. All rights reserved.
www.bannerengineering.com