SSM-S Stainless Steel Corner Mirrors

Datasheet

For use with Banner Safety Light Screen and Safety Light Grid Systems

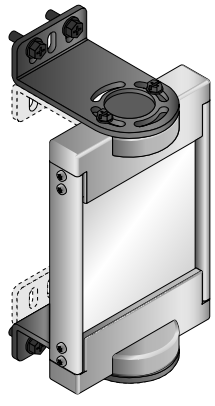

- Allows use of one emitter/receiver pair to guard multiple sides of a machine
- Sturdy, robust construction
- Extra width for use with long-range optical safety systems
- Stainless steel reflective surface provides 50 percent reflectivity
- Black anodized aluminum extrusion
- Molded PBT end caps
- Mounts easily to MSA Series stands or other surfaces
- Available in 20 lengths

Models

Mirror Model	Reflective Area Height (Y)	Mounting Height (L1) *	Overall Height (L2)
SSM-100-S	100 mm (3.9 in)	211 mm (8.3 in)	178 mm (7.0 in)
SSM-150-S	150 mm (5.9 in)	261 mm (10.3 in)	228 mm (9.0 in)
SSM-200-S	200 mm (7.9 in)	311 mm (12.2 in)	278 mm (10.9 in)
SSM-250-S	250 mm (9.8 in)	361 mm (14.2 in)	328 mm (12.9 in)
SSM-375-S	375 mm (14.8 in)	486 mm (19.1 in)	453 mm (17.8 in)
SSM-475-S	475 mm (18.7 in)	586 mm (23.1 in)	553 mm (21.8 in)
SSM-550-S	550 mm (21.7 in)	661 mm (26.0 in)	628 mm (24.7 in)
SSM-675-S	675 mm (26.6 in)	786 mm (31.0 in)	753 mm (29.6 in)
SSM-825-S	825 mm (32.5 in)	936 mm (36.9 in)	903 mm (35.6 in)
SSM-875-S	875 mm (34.4 in)	986 mm (38.8 in)	953 mm (37.5 in)
SSM-975-S	975 mm (38.4 in)	1086 mm (42.8 in)	1053 mm (41.5 in)
SSM-1100-S	1100 mm (43.3 in)	1211 mm (47.7 in)	1178 mm (46.4 in)
SSM-1175-S	1175 mm (46.3 in)	1286 mm (50.6 in)	1253 mm (49.3 in)
SSM-1275-S	1275 mm (46.3 in)	1386 mm (54.6 in)	1353 mm (53.3 in)
SSM-1400-S	1400 mm (55.1 in)	1511 mm (59.5 in)	1478 mm (58.2 in)
SSM-1475-S	1475 mm (58.1 in)	1586 mm (62.5 in)	1553 mm (61.1 in)
SSM-1550-S	1550 mm (61.0 in)	1661 mm (65.4 in)	1628 mm (64.1 in)
SSM-1675-S	1675 mm (65.9 in)	1786 mm (70.3 in)	1753 mm (69.0 in)
SSM-1750-S	1750 mm (68.9 in)	1861 mm (73.3 in)	1828 mm (72.0 in)
SSM-1900-S	1900 mm (74.8 in)	2011 mm (79.2 in)	1978 mm (77.9 in)

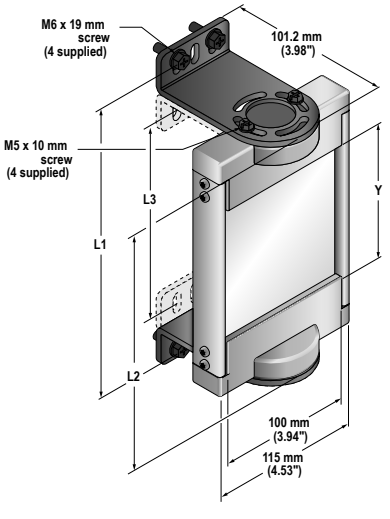

* The mounting brackets may be inverted from the positions shown at left (flanges pointing “inward” instead of “outward,” as shown). When this is done, dimension L1 decreases by 58 mm (2.3 in).

Original Document
67200 Rev. D

30 April 2018

67200

ПРОМЭЛЕКТРОНИКА/ sales@prom-elec.com

Overview

Banner SSM-S Series corner mirrors are designed for use with Banner Safety Light Screen systems, and other optical safety systems, including the SGS Safety Grid System. They enable guarding along more than one side of an area using only one emitter/receiver pair.

SSM-S Series mirrors are compact and extremely robust to withstand industrial environments. Brackets are included for quick and easy mounting. Once mounted, a unique mirror end cap design allows rotation of the mirror to any angle.

The stainless steel mirrors are rated at 50 percent efficiency. Refer to the information on sensing range and excess gain.

SSM-S Series mirrors are available in 20 lengths. SSM-S Series mirrors may be used with light screen sensors up to 1900 mm long. The table below recommends which mirror to use with the applicable sensors. The mirror height (Y) should be a minimum of 50 mm longer than the distance between the top and bottom beams.

SSM Models	EZ-SCREEN Models					
	SLS	LP	LS	Type 2	Point	SGS
SSM-100					SP/SPXL	
SSM-150						
SSM-200	150			150		
SSM-250						
SSM-375	300	270	280	300		
SSM-475		410	350/420			
SSM-550	450		490	450		2-500
SSM-675	600	550	560/630	600		
SSM-825	750	690	700/770	750		
SSM-875		830	840			3-400
SSM-975	900		910	900		4-300
SSM-1100	1050	970	980/1050	1050		
SSM-1175		1110	1120			
SSM-1275	1200		1190	1200		4-400
SSM-1400	1350	1250	1260/1330	1350		
SSM-1475		1390	1400			
SSM-1550	1500		1470	1500		
SSM-1675		1530	1540/1610			
SSM-1750	1650	1670	1680	1650		
SSM-1900	1800	1810	1750/1820	1800		

Each mirror is supplied with two mounting brackets and associated hardware. Mirrors should be securely mounted to a solid surface that is free from vibration. Mirrors must be mounted parallel to their sensors, with the midpoint of the mirror(s) directly in line with the midpoint of the sensor's defined area.

MSA Series stands may be used to mount SSM-S Series mirrors (requires adapter kit EZA-MBK-2, P/N 61947, sold separately). These stands offer an extruded channel design for convenient mirror (or sensor) height adjustment. See datasheet p/n 43687 for complete information. Several stand heights are available:

Stand Model	Stand Height (inch)	Mirror Length	
		Brackets Outward	Brackets Inward
MSA-S24-1	24	100 mm to 250 mm	100 mm to 375 mm
MSA-S42-1	42	100 mm to 675 mm	100 mm to 825 mm
MSA-S66-1	66	100 mm to 1275 mm	100 mm to 1275 mm
MSA-S84-1	84	100 mm to 1675 mm	100 mm to 1900 mm

Specifications

Construction

Mirror: Highly polished stainless steel
Mirror Frame: Molded PBT end caps; rigid aluminum extrusion
Bracket: Cold-rolled steel; black zinc chromate finish

Routine Maintenance

Mirror surface will scratch easily. When necessary, mirrors should be cleaned with a mild glass cleaning solution and a soft cloth.

Aligning Sensors and Corner Mirrors

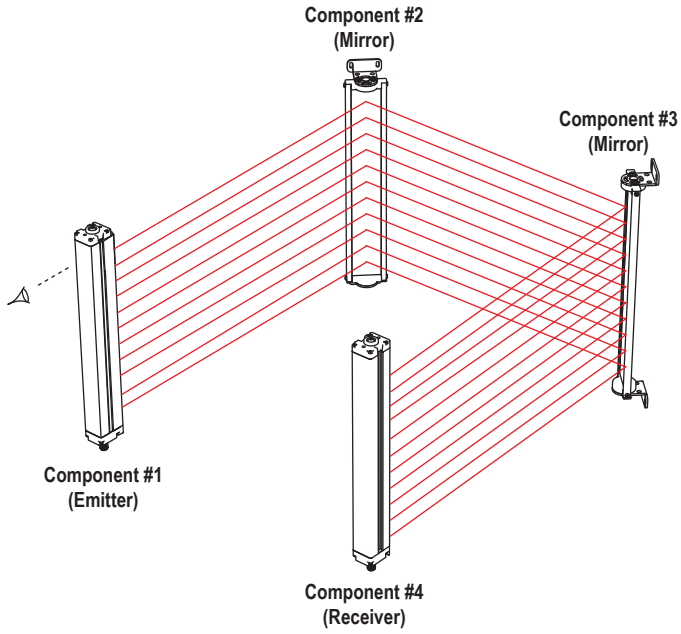

Figure 1. Corner Mirror Alignment

Mount the mirror(s) and the sensors so that they are all parallel. Use a level, if possible. Adjust the position of the sensors and the mirror(s) so that the midpoints of the mirror(s) and the sensors' defined areas are even. (A line connecting the midpoint of all components is illustrated by the dashed line in the drawing.) The midpoint of the defined area of a light curtain system can be determined by referring to the dimensions of the light curtain in its instruction manual.

Adjust the corner mirror(s) so that the angle of incidence to the mirrors equals the angle of reflection from the mirror. Sight from behind one of the sensors directly towards the mirror (or the first mirror in line). When alignment is correct, you will see the straight and centered reflection of the lens of the other sensor in the mirror.

Use the alignment indicator(s) of the safety light screen system (and the appropriate instruction manual) for final alignment.

Range Reduction Using SSM-S Series Corner Mirrors

Use of corner mirrors reduces light screen range (the maximum separation between the emitter and receiver). The following table lists the resultant range when using from one to three SSM-S Series corner mirrors in the sensing path.

Maximized excess gain is always important when installing a safety light screen. Use hard guarding whenever possible to reduce the overall sensing range and the number of mirrors required. Also, keep sensor lenses and mirrors clean and properly aligned.

Light Screen Series	Light Screen Maximum Range				
	0 Mirrors	1 Mirror	2 Mirrors	3 Mirrors	4 Mirrors
14mm EZ-SCREEN® (SLS)	6 m (20 ft)	4.7 m (15.5 ft)	3.7 m (12 ft)	2.8 m (9 ft)	2.2 m (7.2 ft)
30mm EZ-SCREEN® (SLS)	18 m (60 ft)	14.2 m (46.5 ft)	11 m (36 ft)	8.5 m (28 ft)	6.6 m (21.7 ft)
EZ-SCREEN® LP (SLP)	7 m (23 ft)	5.5 m (17.9 ft)	4.2 m (14 ft)	3.3 m (10.8 ft)	2.6 m (8.5 ft)
EZ-SCREEN® LP Basic (SLPVA)	4 m (13 ft)	3.12 m (10.2 ft)	2.4 m (8 ft)	1.9 m (6.2 ft)	1.5 m (1.9 ft)
EZ-SCREEN® LS (SLL)	12 m (39 ft)	9.4 m (30.7 ft)	7.3 m (23.9 ft)	5.7 m (18.7 ft)	4.4 m (14.6 ft)
EZ-SCREEN® LS Basic (SLLV)	8 m (26.2 ft)	6.2 m (20.5 ft)	4.9 m (15.9 ft)	3.8 m (12.4 ft)	3.0 m (9.7 ft)
EZ-SCREEN® Type 2 (LS2)	15 m (50 ft)	11.7 m (38.4 ft)	9.1 m (29.8 ft)	7.1 m (23.3 ft)	5.5 m (18.2 ft)
EZ-SCREEN® Point (SP) Standard Range	20 m (65 ft)	15.6 m (51.2 ft)	12.2 m (39.9 ft)	9.5 m (31.1 ft)	7.4 m (24.3 ft)
EZ-SCREEN® Point (SP) Long Range	70 m (230 ft)	54.6 m (179 ft)	42.6 m (140 ft)	33.2 m (109 ft)	25.9 m (85 ft)
SGS Safety Grid System - Standard Range	30 m (98 ft)	23.4 m (76.8 ft)	18.2 m (59.9 ft)	14.2 m (46.7 ft)	11.1 m (36.4 ft)

Light Screen Series	Light Screen Maximum Range				
	0 Mirrors	1 Mirror	2 Mirrors	3 Mirrors	4 Mirrors
SGS Safety Grid System - Long Range	60 m (197 ft)	46.8 m (153 ft)	36.5 m (120 ft)	28.5 m (93.4 ft)	22.2 m (72.8 ft)
SGS Safety Grid System - Active/Passive	8 m (26.2 ft)	6.2 m (20.5 ft)	4.9 m (15.9 ft)	3.8 m (12.4 ft)	3.0 m (9.7)
SGS Safety Grid System - Active/Passive	6.5 m (21.2 ft)	5.1 (16.6 ft)	3.9 m (12.9 ft)	3.1 m (10.1 ft)	2.4 m (7.9 ft)

Excess Gain

$$\text{Excess Gain} = \text{Maximum Range}^2 \div \text{Separation Distance}^2$$

Given the range, excess gain can be calculated for any distance by using the inverse square law. For example, the excess gain for a 12 m range EZ-Screen LS system at 3 meter separation, using two corner mirrors, is calculated as follows:

$$\text{E.G.} \div 1x = 7.3^2 \div 3^2 = 5.92$$

$$\text{E.G.} = (1x)(5.92) = 5.92x$$

Excess Gain Value Guidelines	
Maximum Excess Gain Required	Operation Environment
1.5×	Clean air: no dirt buildup on lenses or mirrors
5×	Slightly dirty: slight buildup of dust, dirt, oil, moisture, etc. on lenses or mirrors. Lenses and mirrors cleaned on a regular schedule.
10×	Moderately dirty: obvious contamination on lenses or mirrors (but not obscured). Lenses and mirrors cleaned occasionally or when necessary.
50×	Very dirty: heavy contamination on lenses and mirrors. Heavy fog, mist, dust, smoke, or oil film. Minimal cleaning of lenses and mirrors.

Banner Engineering Corp. Limited Warranty

Banner Engineering Corp. warrants its products to be free from defects in material and workmanship for one year following the date of shipment. Banner Engineering Corp. will repair or replace, free of charge, any product of its manufacture which, at the time it is returned to the factory, is found to have been defective during the warranty period. This warranty does not cover damage or liability for misuse, abuse, or the improper application or installation of the Banner product.

THIS LIMITED WARRANTY IS EXCLUSIVE AND IN LIEU OF ALL OTHER WARRANTIES WHETHER EXPRESS OR IMPLIED (INCLUDING, WITHOUT LIMITATION, ANY WARRANTY OF MERCHANTABILITY OR FITNESS FOR A PARTICULAR PURPOSE), AND WHETHER ARISING UNDER COURSE OF PERFORMANCE, COURSE OF DEALING OR TRADE USAGE.

This Warranty is exclusive and limited to repair or, at the discretion of Banner Engineering Corp., replacement. **IN NO EVENT SHALL BANNER ENGINEERING CORP. BE LIABLE TO BUYER OR ANY OTHER PERSON OR ENTITY FOR ANY EXTRA COSTS, EXPENSES, LOSSES, LOSS OF PROFITS, OR ANY INCIDENTAL, CONSEQUENTIAL OR SPECIAL DAMAGES RESULTING FROM ANY PRODUCT DEFECT OR FROM THE USE OR INABILITY TO USE THE PRODUCT, WHETHER ARISING IN CONTRACT OR WARRANTY, STATUTE, TORT, STRICT LIABILITY, NEGLIGENCE, OR OTHERWISE.**

Banner Engineering Corp. reserves the right to change, modify or improve the design of the product without assuming any obligations or liabilities relating to any product previously manufactured by Banner Engineering Corp. Any misuse, abuse, or improper application or installation of this product or use of the product for personal protection applications when the product is identified as not intended for such purposes will void the product warranty. Any modifications to this product without prior express approval by Banner Engineering Corp will void the product warranties. All specifications published in this document are subject to change; Banner reserves the right to modify product specifications or update documentation at any time. Specifications and product information in English supersede that which is provided in any other language. For the most recent version of any documentation, refer to: *www.bannerengineering.com*.

© Banner Engineering Corp. All rights reserved