DXM150-S2 Wireless Modbus Server

Features

The DXM150-S2 Wireless Modbus Server can connect directly to an RS-485 serial bus or to a wireless ISM network as a remote Modbus server device.



- Power options include 12 to 30 V DC with or without a battery backup, or a 12 V DC solar panel with a sealed lead acid battery
- Local I/O options: isolated discrete inputs, universal inputs, NPN/PNP outputs, analog outputs (0 to 10 V), and courtesy power
- ISM radios available in either a 900 MHz band or 2.4 GHz band for local wireless networks

Models

Model	Power In	Power Out	Inputs / Outputs	Radio
DXM150-S2	12-30 V DC, Solar, or Battery	Two courtesy power out, two jumper selectable between 2.7 V or battery, 4.2 V or incoming power	Inputs: Two isolated discrete, eight universal Outputs: Eight PNP/NPN (selectable), two analog	None
DXM150-S2R2				900 MHz HE5 MultiHop Data Radio (North America)

The following models are no longer available for order but are still covered by the information in this document.

- DXM150-S2R4 (2.4 GHz HE5 MultiHop Radio for Worldwide use)

DXM150 Documentation

- DXM Wireless Controller Sell Sheet, p/n 194063
- DXM150-B1 Wireless Controller Datasheet, p/n 178136
- DXM150-B2 Wireless Controller Datasheet, p/n 195952
- DXM150-Bx Wireless Controller Instruction Manual, p/n 190038
- DXM150-S1 Modbus Server Datasheet, p/n 160171
- DXM150-S2 Modbus Server Datasheet, p/n 200634
- DXM150-Sx Modbus Server Instruction Manual, p/n 195455
- DXM ScriptBasic Instruction Manual, p/n 191745
- DXM Controller API Protocol, p/n 186221
- DXM Controller Configuration Quick Start, p/n 191247
- DXM Configuration Software v4, p/n b_4496867
- DXM Configuration Software v4 Instruction Manual, p/n 209933
- DXM EDS Configuration file for Allen-Bradley PLCs, p/n b_4205242
- EIP Configuration File for DXM 1xx-BxR1 and R3 models, p/n 194730
- Activating a Cellular Modem, p/n b_4419353
- Additional technical notes and videos

For more information about the DXM150 family of products, including technical notes, configuration examples, and ScriptBasic programs, please visit www.bannerengineering.com/wireless.

System Overview

Banner's DXM Logic Controller integrates Banner's wireless radio and local I/O for a remote I/O device.

Inputs and Outputs	Connectivity
Universal inputs	Sure Cross® radios
PNP/NPN outputs	RS-485 client
Analog outputs	RS-485 server
Isolated inputs	
Courtesy power out	

Original Instructions
21-Aug-26

© Banner Engineering Corp. All rights reserved.
www.bannerengineering.com

200634
p/n: 200634 Rev. O

ПРОМЭЛЕКТРОНИКА/ sales@prom-elec.com

Inputs and Outputs

On-board universal and programmable I/O ports connect to local sensors, indicators, and control equipment.

Universal inputs, discrete outputs, courtesy power and switched power outputs, isolated inputs

Battery backup, solar controller

Connectivity

The integrated Sure Cross® wireless radio enables Modbus connectivity to remote sensors, indicators, and control equipment.

Wired Connectivity -- Field Bus: Modbus RS-485 Client

Wireless Connectivity -- Sure Cross MultiHop 900 MHz, or MultiHop 2.4 GHz

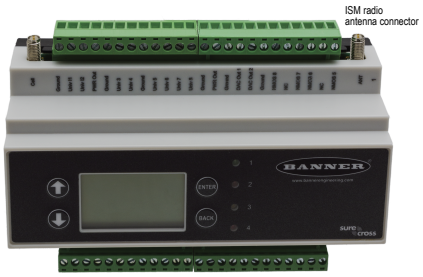

Specifications

Radio Specifications for MultiHop

Radio Transmit Power (900 MHz, 500 mW radios)

Conducted: 27 dBm (500 mW)

EIRP with the supplied antenna: < 36 dBm

Radio Transmit Power (2.4 GHz radios)

Conducted: < 18 dBm (65 mW)

EIRP with the supplied antenna: < 20 dBm (100 mW)

Radio Range

A 2 dB antenna ships with this device.

Transmit power and range are subject to many factors, including antenna gain, installation methods, characteristics of the application, and environmental conditions.

Please refer to the following documents for installation instructions and high-gain antenna options.

Installing Your Sure Cross® Radios (151514)
Conducting a Site Survey (133602)
Sure Cross® Antenna Basics (132113)

Antenna Minimum Separation Distance

900 MHz radios transmitting at ≥ 500 mW: 4.57 m (15 ft) with the supplied antenna

2.4 GHz radios transmitting at 65 mW: 0.3 m (1 ft) with the supplied antenna

Antenna Connection

Ext. Reverse Polarity SMA, 50 Ohms

Max Tightening Torque: 0.45 N·m (4 lbf·in)

Spread Spectrum Technology

FHSS (Frequency Hopping Spread Spectrum)

Radio Packet Size (MultiHop)

900 MHz: 175 bytes (85 Modbus registers)

2.4 GHz: 75 bytes (37 Modbus registers)

900 MHz Compliance (SX7023EXT Radio Module)

Radio module is indicated by the product label marking

Contains FCC ID: UE3SX7023EXT

Contains IC: 7044A-SX7023EXT

2.4 GHz Compliance (SX243 Radio Module)

Radio module is indicated by the product label marking

Contains FCC ID: UE3SX243

Radio Equipment Directive (RED) 2014/53/EU

Contains IC: 7044A-SX243

FCC Part 15 Class A for Intentional Radiators

This equipment has been tested and found to comply with the limits for a Class A digital device, pursuant to Part 15 of the FCC Rules. These limits are designed to provide reasonable protection against harmful interference when the equipment is operated in a commercial environment. This equipment generates, uses, and can radiate radio frequency energy and, if not installed and used in accordance with the instruction manual, may cause harmful interference to radio communications. Operation of this equipment in a residential area is likely to cause harmful interference in which case the user will be required to correct the interference at his own expense.

(Part 15.21) Any changes or modifications not expressly approved by the party responsible for compliance could void the user's authority to operate this equipment.

Industry Canada Statement for Intentional Radiators

This device contains licence-exempt transmitters(s)/receiver(s) that comply with Innovation, Science and Economic Development Canada's licence-exempt RSS(s). Operation is subject to the following two conditions:

1. This device may not cause interference.
2. This device must accept any interference, including interference that may cause undesired operation of the device.

Cet appareil contient des émetteurs/récepteurs exemptés de licence conformes à la norme Innovation, Sciences, et Développement économique Canada. L'exploitation est autorisée aux deux conditions suivantes:

1. L'appareil ne doit pas produire de brouillage.
2. L'utilisateur de l'appareil doit accepter tout brouillage radioélectrique subi, même si le brouillage est susceptible d'en compromettre le fonctionnement.

RS-485 Communication Specifications

Communication Hardware (MultiHop RS-485)

Interface: 2-wire half-duplex RS-485

Baud rates: 9.6k, 19.2k (default), or 38.4k via DIP switches; 1200 and 2400 via the MultiHop Configuration Software

Data format: 8 data bits, no parity, 1 stop bit

DXM150-S2 Power and IO Specifications

Supply Voltage

12 to 30 V DC (use only with a suitable Class 2 power supply (UL) or a SELV (CE) power supply) or

© Banner Engineering Corp. All rights reserved.
www.bannerengineering.com

12 V DC solar panel and 12 V sealed lead acid battery

Power Consumption

20 mA average at 12 Volts (exclusive of load)

Solar Power

12 V sealed lead acid battery

2 A maximum charge current

12 V, 20 W maximum solar panel

Solar Power Battery Charging

1 A maximum with 20 Watt solar panel

Courtesy Power Out

Two incoming power or battery power

100 mA maximum

Selectable (Jumper) Power Out

Output on pin 45, jumper selects 2.7 V or battery

Output on pin 35, jumper selects 4.2 V or incoming power

100 mA maximum

Communication Protocol

Modbus RTU Server

Construction

Polycarbonate; DIN rail mount option

Indicators

Four LEDs, four control buttons, one LCD

Universal Inputs

Sinking/Sourcing discrete, 4–20 mA analog, 0–10 V analog, counter, and temperature 10 kOhm thermistor

Counters, Synchronous

32-bits unsigned

10 ms clock rate minimum

Discrete Inputs

Optically isolated AC input type

Input to output isolation: 2.5 kV

Analog Outputs (DAC)

0 to 20 mA or 0 to 10 V DC output

Accuracy: 0.1% of full scale +0.01% per °C

Resolution: 12-bit

Discrete Outputs

Eight sourcing/PNP, sinking/NPN

ON Condition: Supply minus 2 V

OFF Condition: Less than 2 V

Discrete Output Rating (PNP)

100 mA max current at 30 V DC

ON-State Saturation: Less than 3 V at 100 mA

OFF-state Leakage: Less than 10 µA

Discrete Output Rating (NPN)

100 mA max current at 30 V DC

ON-State Saturation: Less than 1.6 V at 100 mA

OFF-state Leakage: Less than 200 µA for loads greater than 3 kΩ. For load current of 100 mA, leakage is less than 1% of load current.

Certifications

CE/UKCA approval only applies to 2.4 GHz models

Banner Engineering BV
Park Lane, Culliganlaan 2F bus 3
1831 Diegem, BELGIUM

Turck Banner LTD Blenheim House
Blenheim Court
Wickford, Essex SS11 8YT
GREAT BRITAIN

Required Overcurrent Protection

WARNING: Electrical connections must be made by qualified personnel in accordance with local and national electrical codes and regulations.

Overcurrent protection is required to be provided by end product application per the supplied table.

Overcurrent protection may be provided with external fusing or via Current Limiting, Class 2 Power Supply.

Supply wiring leads < 24 AWG shall not be spliced.

For additional product support, go to www.bannerengineering.com.

Supply Wiring (AWG)	Required Overcurrent Protection (A)	Supply Wiring (AWG)	Required Overcurrent Protection (A)
20	5.0	26	1.0
22	3.0	28	0.8
24	2.0	30	0.5

Environmental Specifications (DXM)

Operating Conditions

–20 °C to +60 °C (–4 °F to +140 °F)

95% maximum relative humidity (non-condensing)

Radiated Immunity: 10 V/m (EN 61000-4-3)

Operating the devices at the maximum operating conditions for extended periods can shorten the life of the device.

Environmental Rating

IP20

Shock and Vibration

All models meet IEC 60068-2-6 and IEC 60068-2-27 testing criteria

Shock: 15G 11 ms duration, half sine wave per IEC 60068-2-27

Vibration: 10 Hz to 55 Hz, 0.5 mm peak-to-peak amplitude per IEC 60068-2-6

© Banner Engineering Corp. All rights reserved.
www.bannerengineering.com

Dimensions

All measurements are listed in millimeters [inches], unless noted otherwise. The measurements provided are subject to change.

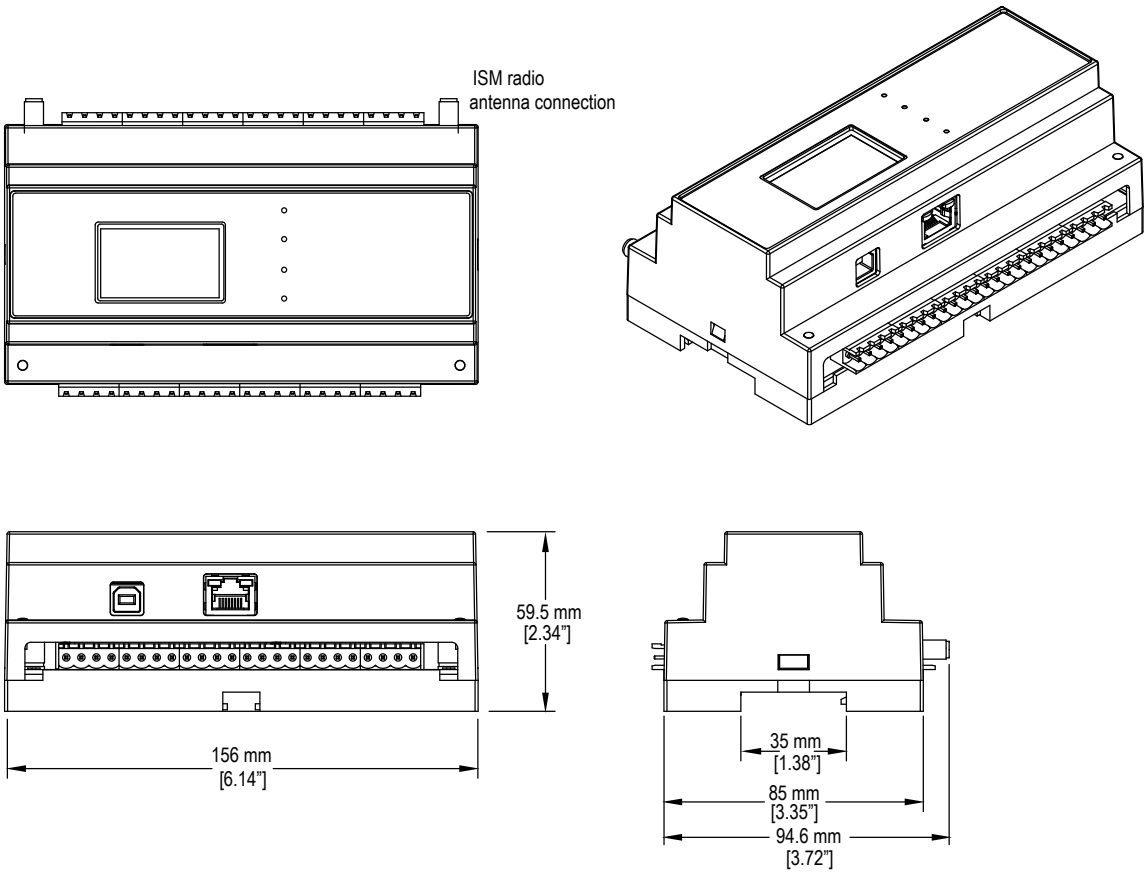

Accessories

For a complete list of all the accessories for the Sure Cross wireless product line, please download the Accessories List (p/n b_3147091).

Cordsets

BC-M12F5-22-2—5-pin M12, straight, single-ended, 2 m
BC-M12F5-22-10—5-pin M12, straight, single-ended, 10 m
BC-M12F5A-22-2—5-pin M12, right-angle, single-ended, 2 m
BC-M12F5A-22-10—5-pin M12, right-angle, single-ended, 10 m

Static and Surge Suppressor

BWC-PRC827-DC—Surge Suppressor, bulkhead, DC Blocking, N-Type Female, N-Type Male

Short-Range Omni Antennas

BWA-2O2-D—Antenna, Dome, 2.4 GHz, 2 dBi, RP-SMA Box Mount
BWA-9O2-D—Antenna, Dome, 900 MHz, 2 dBi, RP-SMA Box Mount
BWA-9O2-RA—Antenna, Rubber Fixed Right Angle, 900 MHz, 2 dBi, RP-SMA Male Connector

Medium-Range Omni Antennas

BWA-9O5-C—Antenna, Rubber Swivel, 900 MHz 5 dBi, RP-SMA Male Connector
BWA-2O5-C—Antenna, Rubber Swivel, 2.4 GHz 5 dBi, RP-SMA Male Connector

Enclosures and DIN Rail Kits

BWA-AH864—Enclosure, Polycarbonate, with Opaque Cover, 8 × 6 × 4
BWA-AH1084—Enclosure, Polycarbonate, with Opaque Cover, 10 × 8 × 4
BWA-AH12106—Enclosure, Polycarbonate, with Opaque Cover, 12 × 10 × 6
BWA-AH8DR—DIN Rail Kit, 8", 2 trilobular/self-threading screws
BWA-AH10DR—DIN Rail Kit, 10", 2 trilobular/self-threading screws
BWA-AH12DR—DIN Rail Kit, 12", 2 trilobular/self-threading screws

Misc Accessories

BWA-CG.5-3X5.6-10—Cable Gland Pack: 1/2-inch NPT, Cordgrip for 3 holes of 2.8 to 5.6 mm diam, 10 pack
BWA-HW-052— Cable Gland and Vent Plug Pack: includes 1/2-inch NPT gland, 1/2-inch NPT multi-cable gland, and 1/2-inch NPT vent plug, one each

Antenna Cables

BWC-1MRSMN05—LMR200 RP-SMA to N-Type Male, 0.5 m
BWC-2MRSFRS6—LMR200, RP-SMA Male to RP-SMA Female Bulkhead, 6 m
BWC-4MNFN6—LMR400 N-Type Male to N-Type Female, 6 m

Long-Range Omni Antennas

BWA-9O8-AS—Antenna, Fiberglass, 3/4 Wave, 900 MHz, 8 dBi, N-Type Female Connector
BWA-2O8-A—Antenna, Fiberglass, 2.4 GHz, 8 dBi, N-Type Female Connector

Long-Range Yagi Antennas

BWA-9Y10-A—Antenna, 900 MHz, 10 dBd, N-Type Female Connector

Power Supplies

PSD-24-4—DC Power Supply, Desktop style, 3.9 A, 24 V DC, Class 2, 4-pin M12 quick disconnect (QD)
PSDINP-24-13 —DC power supply, 1.3 Amps, 24 V DC, with DIN Rail Mount, Class I Division 2 (Groups A, B, C, D) Rated
PSDINP-24-25 — DC power supply, 2.5 Amps, 24 V DC, with DIN Rail Mount, Class I Division 2 (Groups A, B, C, D) Rated
BWA-SOLAR PANEL 20W—Solar Panel, 12 V, 20 W, Multicrystalline, 573 × 357 × 30, "L" style mounting bracket included (does not include controller)

© Banner Engineering Corp. All rights reserved.
www.bannerengineering.com

Product Support and Maintenance

Cleaning Instructions for the Product Label

Clean the product label with dry or water-dampened cloth only.

Warnings

WARNING:
- **Do not use this device for personnel protection**
- Using this device for personnel protection could result in serious injury or death.
- This device does not include the self-checking redundant circuitry necessary to allow its use in personnel safety applications. A device failure or malfunction can cause either an energized (on) or de-energized (off) output condition.

IMPORTANT: Please download the complete DXM150-S2 Wireless Modbus Server technical documentation, available in multiple languages, from www.bannerengineering.com for details on the proper use, applications, Warnings, and installation instructions of this device.

IMPORTANT: Por favor descargue desde www.bannerengineering.com toda la documentación técnica de los DXM150-S2 Wireless Modbus Server, disponibles en múltiples idiomas, para detalles del uso adecuado, aplicaciones, advertencias, y las instrucciones de instalación de estos dispositivos.

IMPORTANT: Veuillez télécharger la documentation technique complète des DXM150-S2 Wireless Modbus Server sur notre site www.bannerengineering.com pour les détails sur leur utilisation correcte, les applications, les notes de sécurité et les instructions de montage.

Install and properly ground a qualified surge suppressor when installing a remote antenna system. Remote antenna configurations installed without surge suppressors invalidate the manufacturer's warranty. Keep the ground wire as short as possible and make all ground connections to a single-point ground system to ensure no ground loops are created. No surge suppressor can absorb all lightning strikes; do not touch the Sure Cross® device or any equipment connected to the Sure Cross® device during a thunderstorm.

Exporting Sure Cross® Radios. It is our intent to fully comply with all national and regional regulations regarding radio frequency emissions. **Customers who want to re-export this product to a country other than that to which it was sold must ensure the device is approved in the destination country.** The Sure Cross wireless products were certified for use in these countries using the antenna that ships with the product. When using other antennas, verify you are not exceeding the transmit power levels allowed by local governing agencies. This device has been designed to operate with the antennas listed on Banner Engineering's website and having a maximum gain of 9 dBm. Antennas not included in this list or having a gain greater than 9 dBm are strictly prohibited for use with this device. The required antenna impedance is 50 ohms. To reduce potential radio interference to other users, the antenna type and its gain should be so chosen such that the equivalent isotropically radiated power (EIRP) is not more than that permitted for successful communication. Consult with Banner Engineering Corp. if the destination country is not on this list.

IMPORTANT:
- **Never operate a radio without connecting an antenna**
- Operating radios without an antenna connected will damage the radio circuitry.
- To avoid damaging the radio circuitry, never apply power to a Sure Cross® Performance or Sure Cross® MultiHop radio without an antenna connected.

IMPORTANT:
- **Electrostatic discharge (ESD) sensitive device**
- ESD can damage the device. Damage from inappropriate handling is not covered by warranty.
- Use proper handling procedures to prevent ESD damage. Proper handling procedures include leaving devices in their anti-static packaging until ready for use; wearing anti-static wrist straps; and assembling units on a grounded, static-dissipative surface.

Notas Adicionales (con Antena)

Información México: La operación de este equipo está sujeta a las siguientes dos condiciones: 1) es posible que este equipo o dispositivo no cause interferencia perjudicial y 2) este equipo debe aceptar cualquier interferencia, incluyendo la que pueda causar su operación no deseada.

Banner es una marca registrada de Banner Engineering Corp. y podrán ser utilizadas de manera indistinta para referirse al fabricante. "Este equipo ha sido diseñado para operar con las antenas tipo Omnidireccional para una ganancia máxima de antena de 6 dBd y Yagi para una ganancia máxima de antena 10 dBd que en seguida se enlistan. También se incluyen aquellas con aprobación ATEX tipo Omnidireccional siempre que no excedan una ganancia máxima de antena de 6dBd. El uso con este equipo de antenas no incluidas en esta lista o que tengan una ganancia mayor que 6 dBd en tipo omnidireccional y 10 dBd en tipo Yagi, quedan prohibidas. La impedancia requerida de la antena es de 50 ohms."

Approved Antennas

BWA-9O2-C--Antena, Omni 902-928 MHz, 2 dBd, junta de caucho, RP-SMA Macho
BWA-9O5-C--Antena, Omni 902-928 MHz, 5 dBd, junta de caucho, RP-SMA Macho
BWA-9O6-A--Antena, Omni 902-928 MHz, 6 dBd, fibra de vidrio, 1800mm, N Hembra
BWA-9Y10-A--Antena, Yagi, 900 MHz, 10 dBd, N Hembra

Mexican Importer

Banner Engineering de Mèxico, S. de R.L. de C.V. | David Alfaro Siqueiros 103 Piso 2 Valle oriente | San Pedro Garza Garcia Nuevo Leòn, C. P. 66269

81 8363.2714

Banner Engineering Corp Limited Warranty

Banner Engineering Corp. warrants its products to be free from defects in material and workmanship for one year following the date of shipment. Banner Engineering Corp. will repair or replace, free of charge, any product of its manufacture which, at the time it is returned to the factory, is found to have been defective during the warranty period. This warranty does not cover damage or liability for misuse, abuse, or the improper application or installation of the Banner product.

© Banner Engineering Corp. All rights reserved.
www.bannerengineering.com

THIS LIMITED WARRANTY IS EXCLUSIVE AND IN LIEU OF ALL OTHER WARRANTIES WHETHER EXPRESS OR IMPLIED (INCLUDING, WITHOUT LIMITATION, ANY WARRANTY OF MERCHANTABILITY OR FITNESS FOR A PARTICULAR PURPOSE), AND WHETHER ARISING UNDER COURSE OF PERFORMANCE, COURSE OF DEALING OR TRADE USAGE.

This Warranty is exclusive and limited to repair or, at the discretion of Banner Engineering Corp., replacement. **IN NO EVENT SHALL BANNER ENGINEERING CORP. BE LIABLE TO BUYER OR ANY OTHER PERSON OR ENTITY FOR ANY EXTRA COSTS, EXPENSES, LOSSES, LOSS OF PROFITS, OR ANY INCIDENTAL, CONSEQUENTIAL OR SPECIAL DAMAGES RESULTING FROM ANY PRODUCT DEFECT OR FROM THE USE OR INABILITY TO USE THE PRODUCT, WHETHER ARISING IN CONTRACT OR WARRANTY, STATUTE, TORT, STRICT LIABILITY, NEGLIGENCE, OR OTHERWISE.**

Banner Engineering Corp. reserves the right to change, modify or improve the design of the product without assuming any obligations or liabilities relating to any product previously manufactured by Banner Engineering Corp. Any misuse, abuse, or improper application or installation of this product or use of the product for personal protection applications when the product is identified as not intended for such purposes will void the product warranty. Any modifications to this product without prior express approval by Banner Engineering Corp will void the product warranties. All specifications published in this document are subject to change; Banner reserves the right to modify product specifications or update documentation at any time. Specifications and product information in English supersede that which is provided in any other language. For the most recent version of any documentation, refer to: www.bannerengineering.com.

For patent information, see www.bannerengineering.com/patents.

© Banner Engineering Corp. All rights reserved.