TABLE 1	
P/N	"L"
71452	258[10.16]
71453	368[14.49]
71454	518[20.39]
71455	667[26.26]
71456	817[32.17]
71457	968[38.07]
71458	1116[43.94]
71459	1266[49.84]
71460	1416[55.75]
71461	1565[61.61]
71462	1715[67.52]
71463	1865[73.43]
19864	227[8.94]

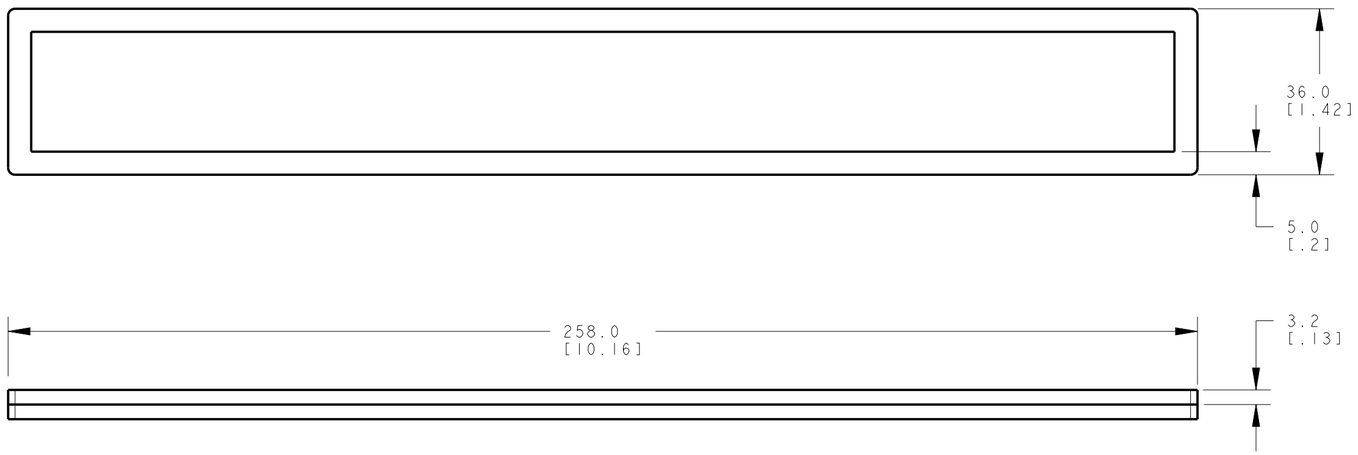



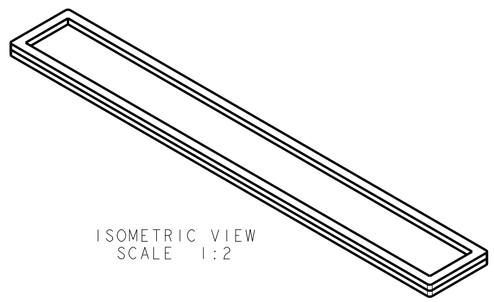

ISOMETRIC VIEW
SCALE 1:2

NOTES:
1. ALL DIMENSIONS ARE MILLIMETERS [INCHES] UNLESS OTHERWISE NOTED.
2. REFER TO "www.bannerengineering.com" FOR ADDITIONAL DATA AND SPECIFICATIONS.

This drawing is the property of BANNER ENGINEERING CORP. Any use or reproduction, in any form, without prior written permission of Banner is prohibited.
© 2015 Banner Engineering Corp.

THIRD ANGLE PROJECTION

BANNER ENGINEERING CORP.
www.bannerengineering.com

TITLE
EZS-150EA

SIZE	DRAWING NO.	REV.
C	215031	A
SCALE 1:1		SHEET 1 OF 1

CREO

ПРОМЭЛЕКТРОНИКА/ sales@prom-elec.com