VSM Series Micro Sensors

Datasheet

Miniature self-contained sensors in stainless steel housing

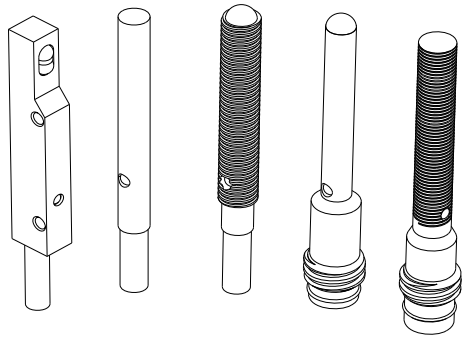

- Tough - 300 series stainless steel body withstands a wide variety of chemicals and cutting fluids
- Tiny sensors are available as small as a 4 mm barrel (about the size of a single optical fiber assembly)
- Economical, self-contained sensors are available in diffuse or opposed sensing modes; no separate amplifier required
- Advanced optical design provides high performance, and very repeatable sensing
- Well-focused, narrow beam allows the entire barrel sensor to be recessed into fixtures (excluding 50 mm range models)
- Smooth, stainless steel barrel is perfect for hygienic applications that require routine cleaning
- A choice of threaded or smooth barrel housings or flat-pack side-looking housing

WARNING: Not To Be Used for Personnel Protection

Never use this device as a sensing device for personnel protection. Doing so could lead to serious injury or death. This device does not include the self-checking redundant circuitry necessary to allow its use in personnel safety applications. A sensor failure or malfunction can cause either an energized or de-energized sensor output condition.

Models

Housing Style: 4 mm Smooth Barrel					
NPN Models	PNP Models	Sensing Mode	Range[1]	Output Type	Connection
VSM46E Emitter		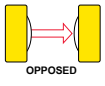 OPPOSED	250 mm (9.84 in)	—	2 m (6.6 ft)
VSM46EQ7 Emitter					3-Pin Pico QD
VSM4RN6R	VSM4RP6R			DO	2 m (6.6 ft)
VSM4RN6RQ7	VSM4RP6RQ7				3-Pin Pico QD
VSM4AN6CV10	VSM4AP6CV10	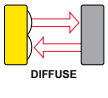 DIFFUSE	10 to 30 mm (0.39 to 1.18 in) typical	LO	2 m (6.6 ft)
VSM4AN6CV10Q7	VSM4AP6CV10Q7				3-Pin Pico QD
VSM4AN6CV20	VSM4AP6CV20		20 to 50 mm (0.79 to 1.97 in) typical		2 m (6.6 ft)
VSM4AN6CV20Q7	VSM4AP6CV20Q7				3-Pin Pico QD
VSM4AN6CV50	VSM4AP6CV50		50 to 140 mm (1.97 to 5.51 in) typical		2 m (6.6 ft)
VSM4AN6CV50Q7	VSM4AP6CV50Q7				3-Pin Pico QD

[1] Application Note: These sensors have a specified minimum detection range on a 90% reflectivity diffuse white card, but the maximum detection range varies with target reflectivity, target angle, and sensor tolerance. If reliable background suppression is required in your application, please contact Banner Engineering to specify a fixed-field or adjustable field sensor with background suppression technology.

Original Document
157367 Rev. F

7 June 2016

157367

ПРОМЭЛЕКТРОНИКА/ sales@prom-elec.com

Housing Style: 5 mm Threaded Barrel					
NPN Models	PNP Models	Sensing Mode	Range[2]	Output Type	Connection
VSM56E Emitter		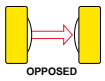	250 mm (9.84 in)	—	2 m (6.6 ft)
VSM56EQ7 Emitter					3-Pin Pico QD
VSM5RN6R	VSM5RP6R			DO	2 m (6.6 ft)
VSM5RN6RQ7	VSM5RP6RQ7				3-Pin Pico QD
VSM5AN6CV10	VSM5AP6CV10	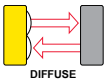	10 to 30 mm (0.39 to 1.18 in) typical	LO	2 m (6.6 ft)
VSM5AN6CV10Q7	VSM5AP6CV10Q7				3-Pin Pico QD
VSM5AN6CV20	VSM5AP6CV20		20 to 50 mm (0.79 to 1.97 in) typical		2 m (6.6 ft)
VSM5AN6CV20Q7	VSM5AP6CV20Q7				3-Pin Pico QD
VSM5AN6CV50	VSM5AP6CV50		50 to 140 mm (1.97 to 5.51 in) typical		2 m (6.6 ft)
VSM5AN6CV50Q7	VSM5AP6CV50Q7				3-Pin Pico QD

Housing Style: Flat-Pack Side-Looker					
NPN Models	PNP Models	Sensing Mode	Range[2]	Output Type	Connection
VSMQAN6CV20	VSMQAP6CV20	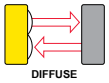	20 to 50 mm (0.79 to 1.97 in) typical	LO	2 m (6.6 ft)
VSMQAN6CV50	VSMQAP6CV50		50 to 140 mm (1.97 to 5.51 in) typical		
VSMQAN6CV90	VSMQAP6CV90		90 to 200 mm (3.54 to 7.87 in) typical		

[2] Application Note: These sensors have a specified minimum detection range on a 90% reflectivity diffuse white card, but the maximum detection range varies with target reflectivity, target angle, and sensor tolerance. If reliable background suppression is required in your application, please contact Banner Engineering to specify a fixed-field or adjustable field sensor with background suppression technology.

Specifications

Supply Voltage and Current
10 to 30 V dc (10% maximum ripple)

Supply Protection Circuitry
Protected against reverse polarity and transient voltages

Output Configuration
Single-output: 1 NPN or 1 PNP; light operate (LO) or dark operate (DO), depending on model

Output Rating
100 mA max
OFF-state leakage current: less than 1 µA
ON-state saturation voltage: less than 2 V at 100 mA

Required Overcurrent Protection

WARNING: Electrical connections must be made by qualified personnel in accordance with local and national electrical codes and regulations.

Overcurrent protection is required to be provided by end product application per the supplied table.
Overcurrent protection may be provided with external fusing or via Current Limiting, Class 2 Power Supply.
Supply wiring leads < 24 AWG shall not be spliced.
For additional product support, go to *http://www.bannerengineering.com*.

Supply Wiring (AWG)	Required Overcurrent Protection (Amps)
20	5.0
22	3.0
24	2.0
26	1.0
28	0.8
30	0.5

Output Protection Circuitry
Protected against false power-up and continuous overload or short circuit of outputs
Overload trip point ≥ 100 mA

Response Time
2.5 milliseconds

Delay at Power-Up
20 milliseconds

Repeatability
1 millisecond

Indicators
Yellow LED: light sensed

Construction
300 series stainless steel with PVC cable
CV10, CV20: sapphire lens
CV50, emitter and receiver: glass lens

Environmental Rating
IP67

Connection
2 m PVC-jacketed cable or 3-pin Pico-style integral QD (Q7), depending on model.

Operating Conditions
Temperature: 0 °C to +55 °C (+32 °F to +131 °F)

Certifications

Dimensions

4 mm Smooth Barrel Emitter/Receiver Cable and 50 mm CV Models

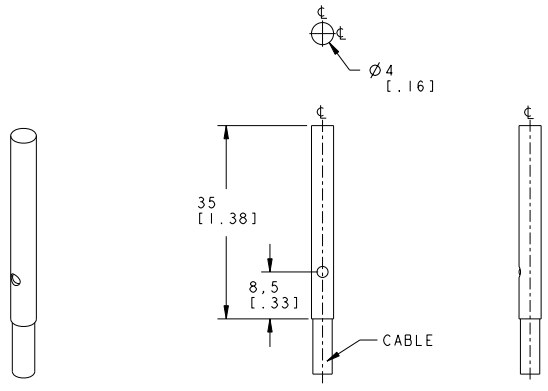

4 mm Smooth Barrel Emitter/Receiver QD and 50 mm CV Models

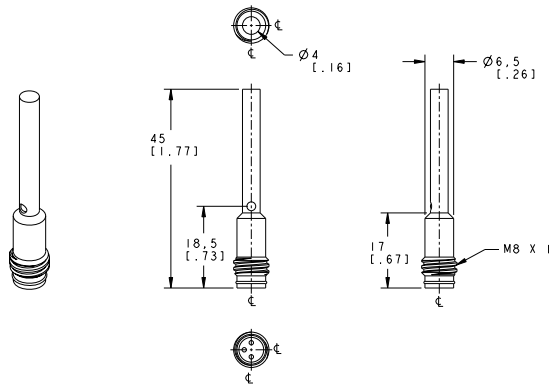

5 mm Threaded Barrel Emitter/Receiver Cable and 50 mm CV Models

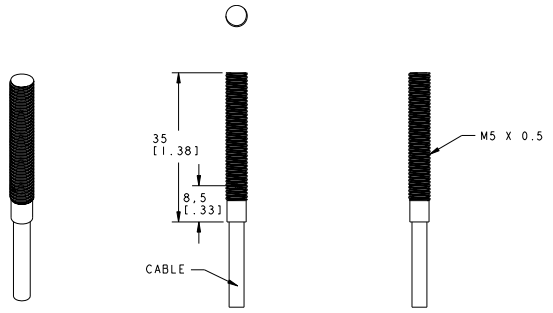

VSM5 Emitter/Receiver QD and 50 mm CV Models

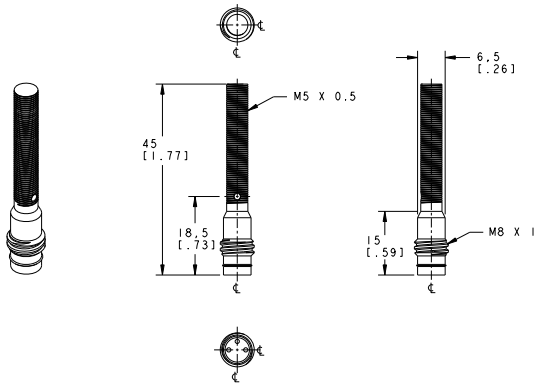

4 mm Smooth Barrel Cable/10 and 20 mm CV Models

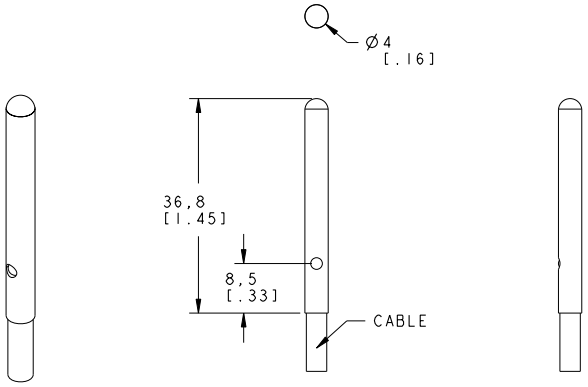

4 mm Smooth Barrel QD/10 and 20 mm CV Models

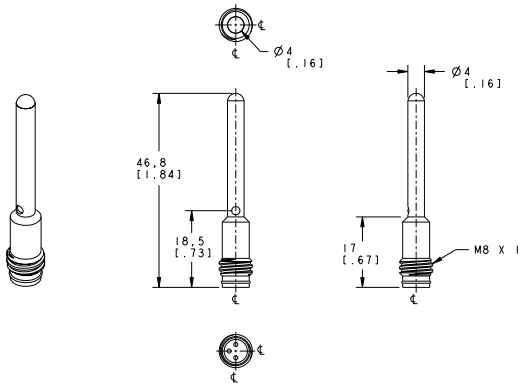

5 mm Threaded Barrel Cable/10 and 20 mm CV Models

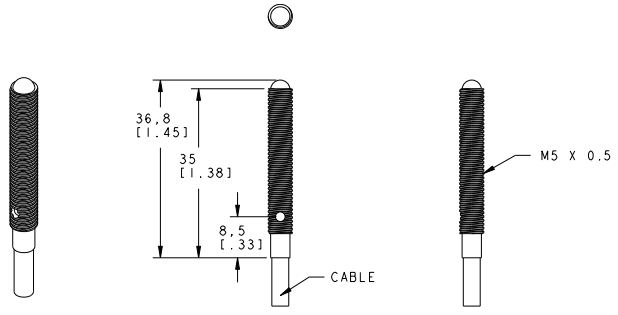

5 mm Threaded Barrel QD/10 and 20 mm CV Models

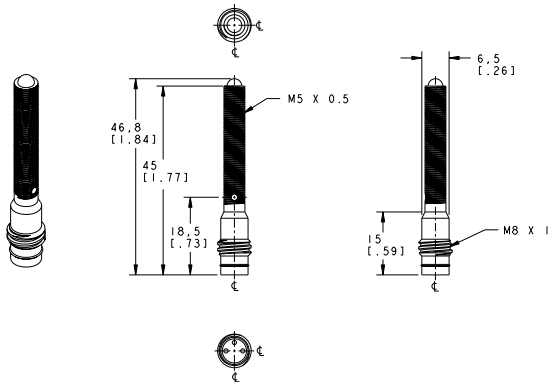

Flat-Pack Side-Looker
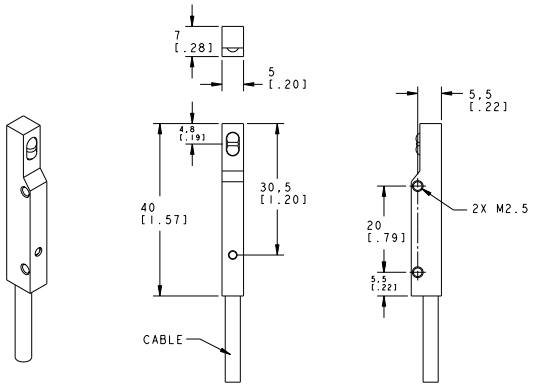

Excess Gain Curves

Opposed Mode VSM4 and VSM5	Diffuse Mode VSM4 and VSM5		
Range 250 mm	Range 10 mm	Range 20 mm	Range 50 mm
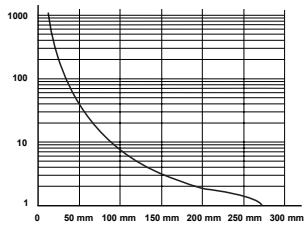	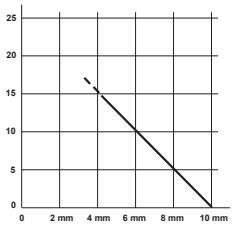	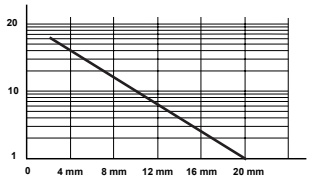	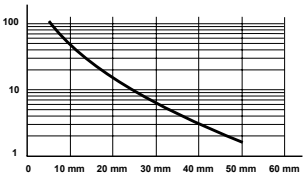

Diffuse Mode VSMQ		
Range 20 mm	Range 50 mm	Range 90 mm
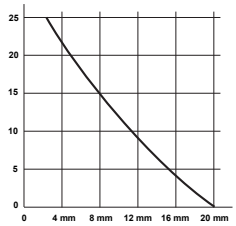	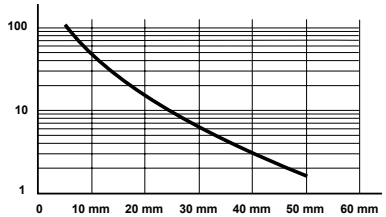	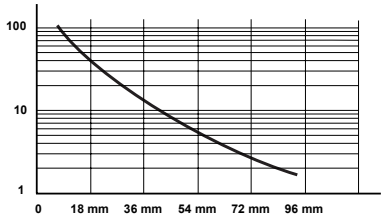

Beam Patterns

Opposed Mode VSM4 and VSM5	Diffuse Mode VSM4 and VSM5		
Range 250 mm	Range 10 mm	Range 20 mm	Range 50 mm
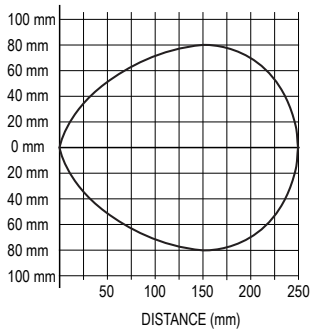	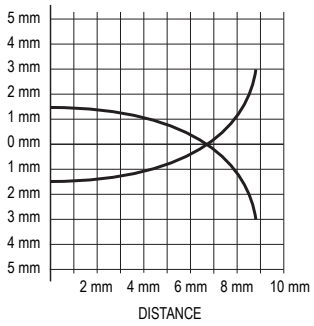	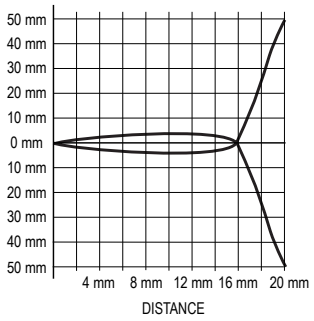	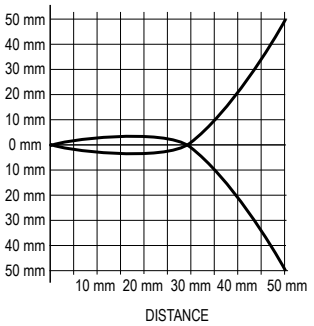

Diffuse Mode VSMQ		
Range 20 mm	Range 50 mm	Range 90 mm
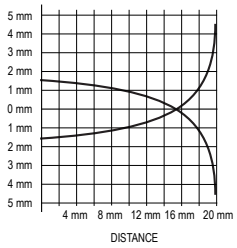	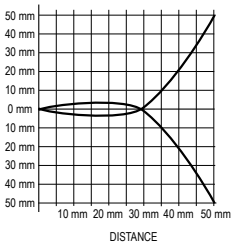	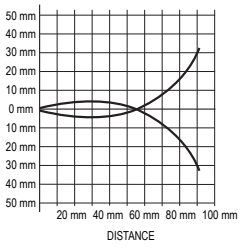

Wiring

Emitters	PNP Models	NPN Models
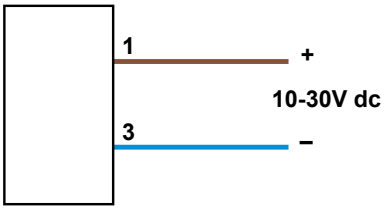	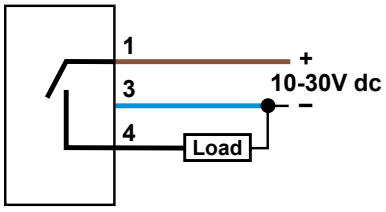	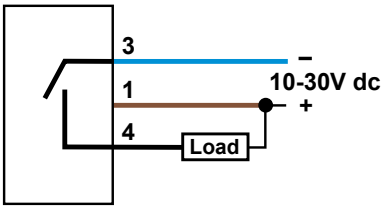

Accessories

Cordsets

3-Pin Threaded M8/Pico-Style Cordsets				
Model	Length	Style	Dimensions	Pinout
PKG3M-2	2 m (6.56 ft)	Straight	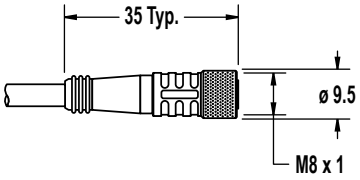	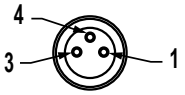 1 = Brown 3 = Blue 4 = Black
PKG3M-5	5 m (16.40 ft)			
PKG3M-7	7 m (22.97 ft)			
PKG3M-9	9 m (29.53 ft)			
PKG3M-10	10 m (32.81 ft)			
PKW3M-2	2 m (6.56 ft)	Right-Angle	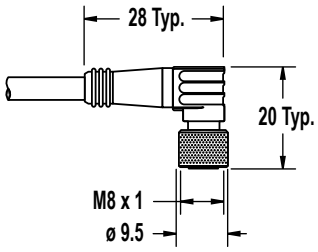	
PKW3M-5	5 m (16.40 ft)			
PKW3M-9	9 m (29.53 ft)			

Brackets

SMBVSM4

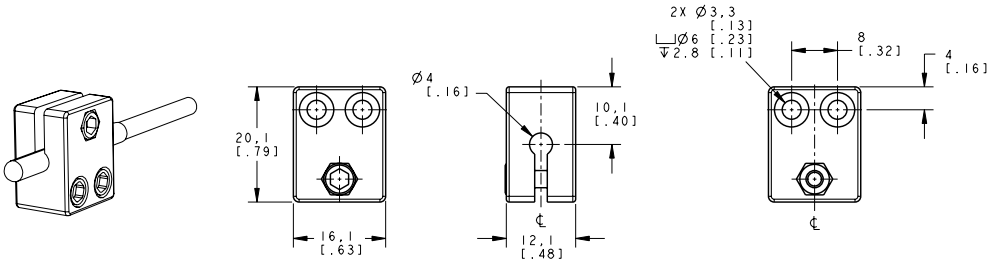

Banner Engineering Corp. Limited Warranty

Banner Engineering Corp. warrants its products to be free from defects in material and workmanship for one year following the date of shipment. Banner Engineering Corp. will repair or replace, free of charge, any product of its manufacture which, at the time it is returned to the factory, is found to have been defective during the warranty period. This warranty does not cover damage or liability for misuse, abuse, or the improper application or installation of the Banner product.

THIS LIMITED WARRANTY IS EXCLUSIVE AND IN LIEU OF ALL OTHER WARRANTIES WHETHER EXPRESS OR IMPLIED (INCLUDING, WITHOUT LIMITATION, ANY WARRANTY OF MERCHANTABILITY OR FITNESS FOR A PARTICULAR PURPOSE), AND WHETHER ARISING UNDER COURSE OF PERFORMANCE, COURSE OF DEALING OR TRADE USAGE.

This Warranty is exclusive and limited to repair or, at the discretion of Banner Engineering Corp., replacement. IN NO EVENT SHALL BANNER ENGINEERING CORP. BE LIABLE TO BUYER OR ANY OTHER PERSON OR ENTITY FOR ANY EXTRA COSTS, EXPENSES, LOSSES, LOSS OF PROFITS, OR ANY INCIDENTAL, CONSEQUENTIAL OR SPECIAL DAMAGES RESULTING FROM ANY PRODUCT DEFECT OR FROM THE USE OR INABILITY TO USE THE PRODUCT, WHETHER ARISING IN CONTRACT OR WARRANTY, STATUTE, TORT, STRICT LIABILITY, NEGLIGENCE, OR OTHERWISE.

Banner Engineering Corp. reserves the right to change, modify or improve the design of the product without assuming any obligations or liabilities relating to any product previously manufactured by Banner Engineering Corp.

Copyright Notice

Any misuse, abuse, or improper application or installation of this product or use of the product for personal protection applications when the product is identified as not intended for such purposes will void the product warranty. Any modifications to this product without prior express approval by Banner Engineering Corp will void the product warranties. All specifications published in this document are subject to change; Banner reserves the right to modify product specifications or update documentation at any time. For the most recent version of any documentation, refer to: www.bannerengineering.com. © Banner Engineering Corp. All rights reserved.