SI-LS42 Series Locking-Style Safety Interlock Switch Instruction Manual

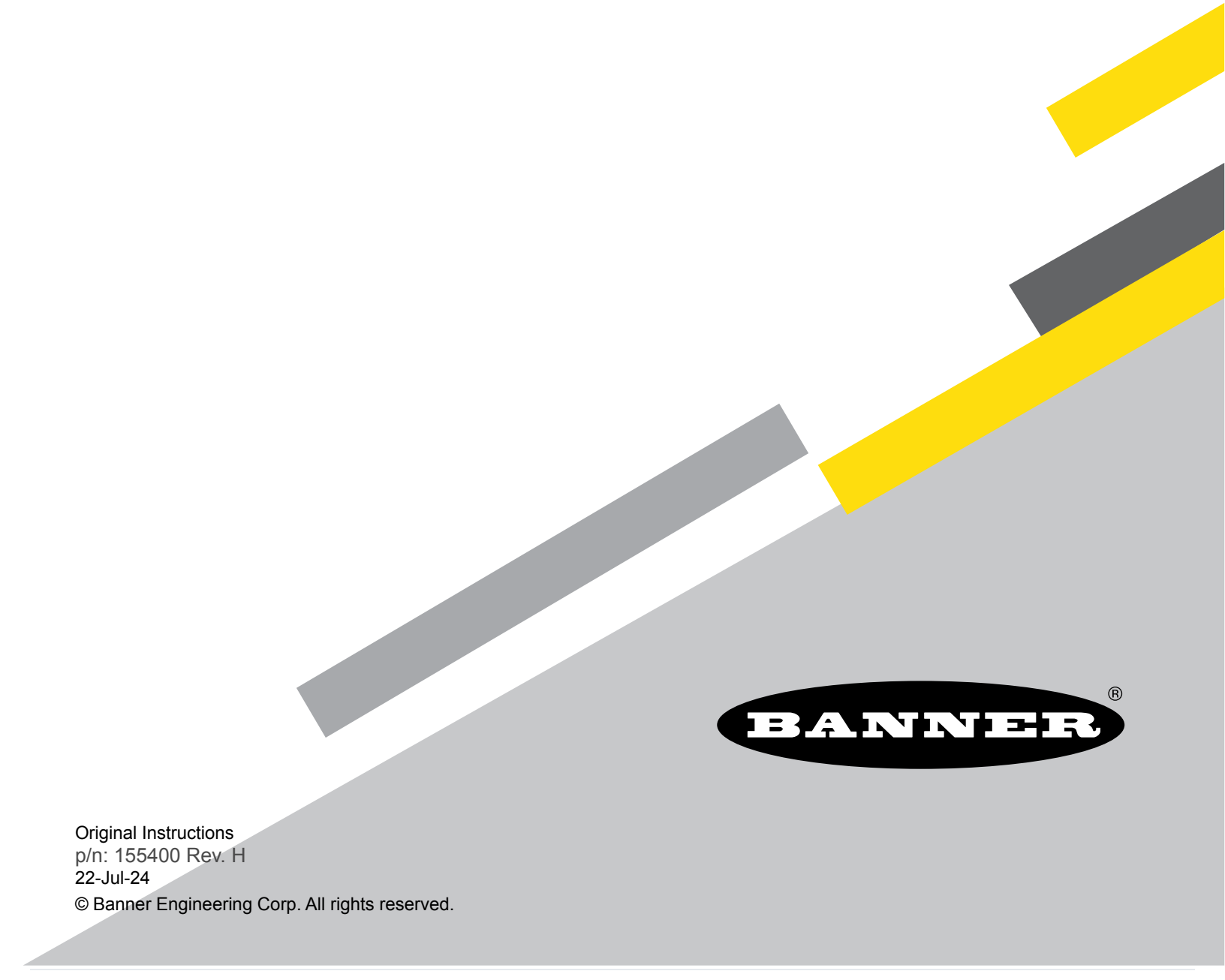

Original Instructions
p/n: 155400 Rev. H
22-Jul-24
© Banner Engineering Corp. All rights reserved.

ПРОМЭЛЕКТРОНИКА/ sales@prom-elec.com

Contents

Chapter 1 SI-LS42 Product Overview

SI-LS42 Models 3
Important... Read this before proceeding! 4
SI-LS42 Overview 5

Chapter 2 Installation Instructions

Installation Requirements 6
Pass-Through Hazards and Perimeter Guarding 7
Mechanical Installation 7
- Position the Actuator Head Horizontally 8
- Position the Actuator Head Vertically 9
- Install the Switch and Actuator 10
- Align the SI-QM-SMFA 11
- Operate the Manual Release of the Spring Lock Models 12

Electrical Installation 13
- Access the Wiring Chamber 13
- Wire the Terminals 13
- Connection to a Machine 14

Chapter 3 Operating Instructions

Checkout Procedures 17
Initial and Daily Checks 17
Periodic Checks 17

Chapter 4 SI-LS42 Specifications

Dimensions 20

Chapter 5 Accessories

Actuators 22
Plastic Conduit Adapter 22
Cable Glands 22
Universal (Input) Safety Modules 22
Safety Controllers 23
Replacement Parts 23

Chapter 6 Product Support and Maintenance

Repairs 24
EU/UK Declaration of Conformity (DoC) 24
Banner Engineering Corp Limited Warranty 24
..... 25

© Banner Engineering Corp. All rights reserved.

Chapter Contents

SI-LS42 Models 3
Important... Read this before proceeding! 4
SI-LS42 Overview 5

Chapter 1 SI-LS42 Product Overview

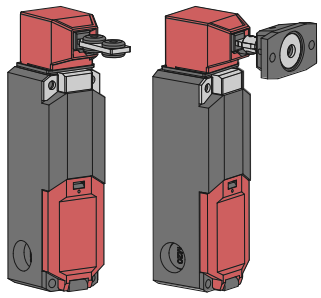

- Positive opening safety contacts (IEC 60947-5-1)
- Contact monitors both the presence of the actuator and if it is locked into the interlock
- Choice of two locking mechanism types:
  - Spring lock with energized solenoid release
  - Energized solenoid lock with spring unlock
- Models with spring lock/solenoid unlock have a manual release
- Two solenoid voltages available:
  - 24 V AC/DC
  - 110/230 V AC
- Choose either of two stainless steel actuator types:
  - Rigid in-line
  - Flexible in-line
- Actuator head rotatable in 90° increments and can be positioned for either horizontal or vertical actuation
- Choice of four switching actuator contact configurations (with actuator engaged):
  - 1 normally-closed plus 1 normally-open
  - 2 normally-closed
  - 2 normally-closed plus 1 normally-open
  - 3 normally-closed
- Heavy-duty thermoplastic housing, rated IP67, suitable for demanding industrial environments
- Insulated device (IEC 60947-5-1)

SI-LS42 Models

A complete safety system is typically made up of two interlocks, two actuators, two cables, and a safety monitoring device.

For kit models and interlock body models, insert **"S" for Spring Lock/Solenoid Unlock** or **"M" for Solenoid Lock/Spring Unlock**.
Example: SI-LS42DM_G can become SI-LS42DMSG or SI-LS42DMMG.

© Banner Engineering Corp. All rights reserved.

Kit Model [1]	Solenoid Voltage	Actuator Type	Interlock Body	Contact Configuration		Switching Diagram [2]
				(Actuator Engaged and Locked)	(Actuator Unlocked and Removed)	
SI-LS42DM_G	24 V AC/DC	SI-QM-SSA Rigid in-line	SI-LS42D_G	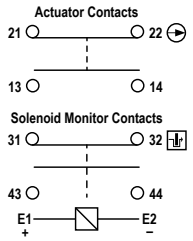	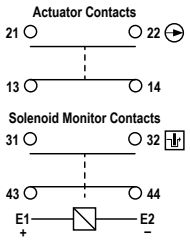	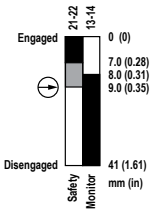
SI-LS42WM_G	110/230 V AC		SI-LS42W_G			
SI-LS42DM_GF	24 V AC/DC	SI-QM-SMFA Flexible in-line	SI-LS42D_G			
SI-LS42WM_GF	110/230 V AC		SI-LS42W_G			
SI-LS42DM_H	24 V AC/DC	SI-QM-SSA Rigid in-line	SI-LS42D_H	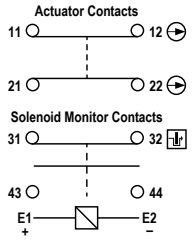	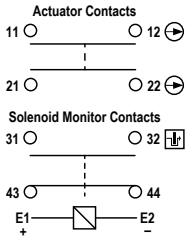	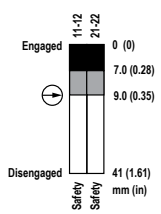
SI-LS42WM_H	110/230 V AC		SI-LS42W_H			
SI-LS42DM_HF	24 V AC/DC	SI-QM-SMFA Flexible in-line	SI-LS42D_H			
SI-LS42WM_HF	110/230 V AC		SI-LS42W_H			
SI-LS42DM_I	24 V AC/DC	SI-QM-SSA Rigid in-line	SI-LS42D_I	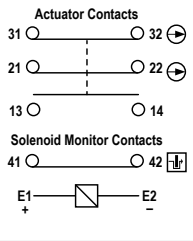	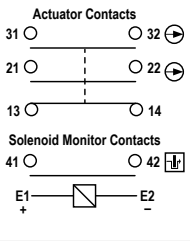	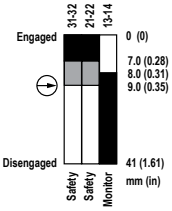
SI-LS42WM_I	110/230 V AC		SI-LS42W_I			
SI-LS42DM_IF	24 V AC/DC	SI-QM-SMFA Flexible in-line	SI-LS42D_I			
SI-LS42WM_IF	110/230 V AC		SI-LS42W_I			
SI-LS42DM_J	24 V AC/DC	SI-QM-SSA Rigid in-line	SI-LS42D_J	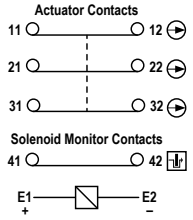	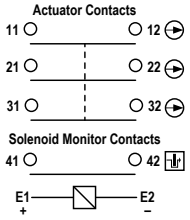	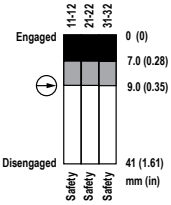
SI-LS42DM_JF		SI-QM-SMFA Flexible in-line				

⊕—Signifies which contacts are positive opening safety contacts (per IEC 60947-5-1). This contact is forced open by the action of removing the actuator from the Interlock.

—Signifies which contact is positively connected to the locking mechanism. This contact cannot close if the actuator is not present in the interlock.

Important... Read this before proceeding!

The user is responsible for satisfying all local, state, and national laws, rules, codes, and regulations relating to the use of this product and its application. Banner Engineering Corp. has made every effort to provide complete application, installation, operation, and maintenance instructions. Please contact a Banner Applications Engineer with any questions regarding this product.

The user is responsible for making sure that all machine operators, maintenance personnel, electricians, and supervisors are thoroughly familiar with and understand all instructions regarding the installation, maintenance, and use of this product, and with the machinery it controls. The user and any personnel involved with the installation and use of this product must be thoroughly familiar with all applicable standards, some of which are listed within the specifications. Banner Engineering Corp.

[1] A kit contains an interlock and actuator. Individual pieces are for replacement purposes only.
[2] Contacts: □ Open ■ Closed ■ Transition

© Banner Engineering Corp. All rights reserved.

makes no claim regarding a specific recommendation of any organization, the accuracy or effectiveness of any information provided, or the appropriateness of the provided information for a specific application.

SI-LS42 Overview

The SI-LS42 Series Locking-Style Safety Interlock Switch with guard locking capability can be used to monitor the position of a guard to detect its movement, opening, or removal.

The SI-LS42 can also be used to secure the guard in place to allow the hazard time to stop before the guard is opened. This allows the guard to be located closer to the hazard than otherwise possible in applications where the guard can be opened and the hazard can be accessed. A guard can be a gate, door, cover, panel, barrier, or other physical means that separates individuals from the hazard. Safety switches will issue a signal to the machine control system to prevent or stop hazardous situations when the guard is not in the proper position.

The SI-LS42 is designed for guard-locking applications. There are two styles available:

- Spring Lock, Solenoid Unlock (Models **SI-LS42DMS..** and **SI-LS42WMS..**)—The actuator is mechanically locked when it is fully inserted into the actuator head. The actuator is unlocked by applying voltage to the solenoid.
- Solenoid Lock, Spring Unlock (Models **SI-LS42DMM..** and **SI-LS42WMM..**)—The fully inserted actuator is locked when voltage is applied to the solenoid. The actuator is unlocked when voltage is removed from the solenoid.

The SI-LS42 is a type 2 locking fixture with an electromechanical latching device and low-level coding according to ISO 14119.

Applications involving the use of the SI-LS42 Series Locking-Style Safety Interlock Switch should take into consideration the following standards:

- ISO 13849-1 Safety of Machinery – Safety-Related Parts of Control Systems – Part 1: General Principles for Design
- ISO 12100 Safety of Machinery – General Principles for Design – Risk Assessment and Risk Reduction
- ISO 14119 (EN 1088) Interlocking Devices Associated with Guards – Principles for Design and Selection
- ISO 13857 Safety of Machinery – Safety Distances to Prevent Hazard Zones Being Reached
- ANSI B11.0 Safety of Machinery
- ANSI B11.19 Performance Requirements for Risk Reduction Measures: Safeguarding and Other Means of Reducing Risk

© Banner Engineering Corp. All rights reserved.

Chapter Contents

Installation Requirements 6
Pass-Through Hazards and Perimeter Guarding 7
Mechanical Installation 7
Electrical Installation 13

Chapter 2 Installation Instructions

Installation Requirements

The following general requirements and considerations apply to the installation of interlocked gates and guards for the purpose of safeguarding. In addition, the user must refer to the relevant regulations and comply with all necessary requirements. See ANSI B11.19, or ISO 14119 and ISO 14120, or the appropriate standard.

Hazards guarded by the interlocked guard must be prevented from operating until the guard is closed; a stop command must be issued to the guarded machine if the guard opens while the hazard is present. Closing the guard must not, by itself, initiate hazardous motion; a separate procedure must be required to initiate the motion. The safety switches must not be used as a mechanical or end-of-travel stop.

Locate the guard an adequate distance from the danger zone (so the hazard has time to stop before the guard is opened sufficiently to provide access to the hazard). The guard must open either laterally or away from the hazard, not into the safeguarded area. The guard also should not be able to close by itself and activate the interlocking circuitry. The installation must prevent personnel from reaching over, under, around or through the guard to access the hazard. Any openings in the guard must not allow access to the hazard—see ANSI B11.19, ISO 13857, or the appropriate standard.

The guard must be strong enough and designed to protect personnel and contain hazards within the guarded area that can be ejected, dropped, or emitted by the machine. Design and install the safety switches and actuators so that they cannot be easily defeated. Measures to minimize defeat (bypassing) of interlocking safety switches include:

- Minimizing motivation for defeating interlocking by providing training, supervision, and efficient means for machine setup/adjustment, operation, and maintenance
- Limiting accessibility to the interlocking device, such as mounting out of reach, mounting behind a physical obstruction, mounting in a concealed position
- Mounting them securely so that their physical position cannot shift, using reliable fasteners that require a tool to remove
- Preventing the switch or the actuator from being disassembled or repositioned that compromises the safety function (for example, welding, one-way screws, riveting)

Mounting slots in the housing, if provided, are for initial adjustment only; final mounting holes (round) must be used for permanent location. The switches, actuating systems, and actuators must not be used as a mechanical or end-of-travel stop.

The normally closed safety contacts are of a "positive-opening" design. Positive-opening operation causes the contacts to be forced open, without the use of springs, when the actuator is disengaged or moved from its home position. In addition, the switch(es) must be mounted in a "positive mode", to move/disengage the actuating system and actuator from its home position and open the normally closed contact, when the guard opens.

The overall control concept, into which the switch has been integrated, must be validated in accordance with ISO 13849-2 or evaluated according to IEC 62061.

See Mechanical Installation, Connection to a Machine, and Specifications.

© Banner Engineering Corp. All rights reserved.

WARNING:

- **Properly Install the Interlocked Guards**
- Failure to follow these guidelines could result in serious injury or death.
- At a minimum, the interlocked guard must prevent hazards when not fully closed and must prevent access to the hazards through any opening in the guard.
- Install the safety switches and actuators so they cannot be easily defeated and are not used as a mechanical or end-of-travel stop. Mount at least one switch in a positive mode and verify it opens the normally closed contact when the guard opens.
- The user must refer to the relevant regulations and comply with all necessary requirements. See ANSI B11.19, or ISO 14119 and ISO 14120, or the appropriate standard.

CAUTION:

- **Do not use the safety switch as a mechanical or end-of-travel stop.**
- Catastrophic damage can cause the safety switch to fail in an unsafe manner (that is, loss of the switching action).
- Limit the movement or rotation of the guard to prevent damage to the safety switch or the actuator.

Pass-Through Hazards and Perimeter Guarding

A pass-through hazard is associated with applications where personnel may pass through a safeguard (which issues a stop command to remove the hazard), and then continues into the guarded area, such as in perimeter guarding. Subsequently, their presence is no longer detected, and the related danger becomes the unexpected start or restart of the machine while personnel are within the guarded area.

Eliminate or reduce pass-through hazards whenever possible—see ANSI B11.19 and ANSI B11.20 or ISO 11161. One method to mitigate the risk is to ensure that once tripped, either the safeguarding device, the safety related part of the control system, or the guarded machine's MSCs/MPCEs will latch in an OFF condition. The latch must require a deliberate manual action to reset that is separate from the normal means of machine cycle initiation.

This method relies upon the location of the reset switch as well as safe work practices and procedures to prevent an unexpected start or restart of the guarded machine. All reset switches must be:

- Outside the guarded area
- Located to allow the switch operator a full, unobstructed view of the entire guarded area while the reset is performed
- Out of reach from within the guarded area
- Protected against unauthorized or inadvertent operation (such as through the use of rings or guards)

If any areas within the guarded area are not visible from the reset switch, additional safeguarding must be provided.

WARNING:

- **Perimeter guarding applications**
- Failure to observe this warning could result in serious injury or death.
- Use lockout/tagout procedures per ANSI Z244.1, or use additional safeguarding as described by ANSI B11.19 safety requirements or other applicable standards if a passthrough hazard cannot be eliminated or reduced to an acceptable level of risk.

Mechanical Installation

IMPORTANT: Install a safety switch in a manner that discourages tampering or defeat. Mount switches to prevent bypassing of the switching function at the terminal chamber or Quick Disconnect (QD). A switch and its actuator must never be used as a mechanical stop. Overtravel may cause damage to switch.

© Banner Engineering Corp. All rights reserved.

All mounting hardware is supplied by the user. Fasteners must be of sufficient strength to guard against breakage. Use of permanent fasteners or locking hardware is recommended to prevent the loosening or displacement of the actuator and the switch body. The mounting holes (5.3 mm) in the switch body accept M5 (#10) hardware. The mounting holes in the actuators accept M4 (#6) for the **SI-QM-SSA**, 4.5 mm, or M5 (#10) for the **SI-QM-SMFA**, 5.5 mm.

Mount the sensor and actuator such that the position cannot be changed after installation/adjustment. Mount the switch securely on a solid, stationary surface. Prevent the loosening of mounting hardware by using lock washers, thread-locking compound, etc. Only use slots for initial positioning. Pins, dowels, and splines can be used to prevent movement of the switch and the actuator.

Locate the switch body and actuator to allow access for functional checks, maintenance, service or replacement. The installation should provide suitable clearances, be readily accessible, and allow access to the actuator and sensor.

CAUTION: Do not overtighten the units during installation. Overtightening can twist the housing and affect the sensor/switch performance.

IMPORTANT: It is the responsibility of the machine builder (user) to ensure the wiring/cabling is not easily manipulated by an operator to defeat the safety function(s); for example, cannot remove a switch from the system.

Actuator minimum door radius

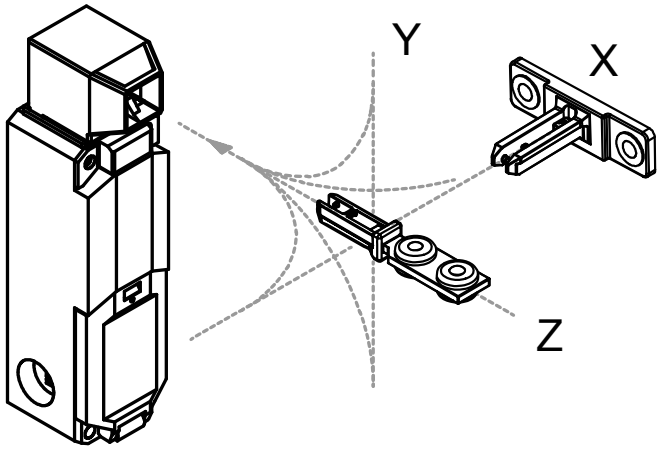

Each actuator style has its own minimum door radius to ensure that its tongue smoothly enters the opening of the head of the switch.

- **SI-QM-SSA**: 400 mm (16 in)
- **SI-SM-SMFA**: 150 mm (6 in)

Position the Actuator Head Horizontally

The actuator head can be rotated in increments of 90° to create eight possible actuator positions (four horizontal and four vertical positions). Follow these steps to horizontally rotate the head.

1. Pull the holding clamp forward.
2. Rotate the head (in either direction) to the desired position.
3. Push the holding clamp back in to lock.
   The head may be rotated with the actuator either engaged or removed.

© Banner Engineering Corp. All rights reserved.

Head rotation

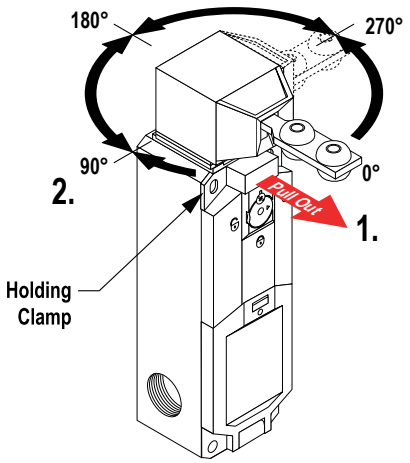

4. After the actuation direction (vertical or horizontal) is configured, install the M3 x 15 mm tamper-proof (one-way) screw.

   This screw is found in the plastic bag stored in the wiring chamber.

Install the tamper-proof screw

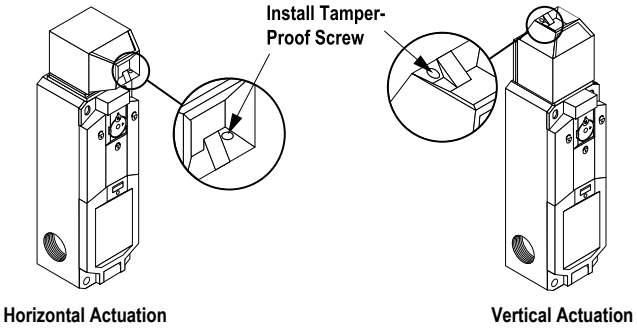

Position the Actuator Head Vertically

To use vertical actuation, follow these steps.

1. Remove the head by pulling straight up and off.
2. Re-orient the actuator head and slide it back on until it snaps in place.

© Banner Engineering Corp. All rights reserved.

Position the head for vertical actuation

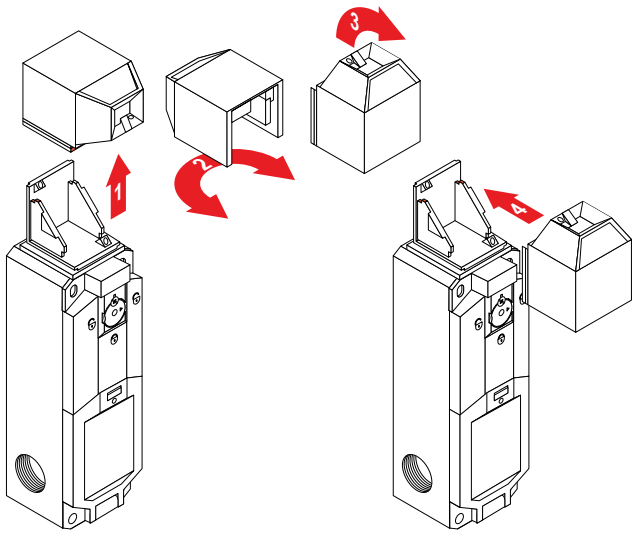

3. After the actuation direction (vertical or horizontal) is configured, install the M3 x 15 mm tamper-proof (one-way) screw.
   This screw is found in the plastic bag stored in the wiring chamber.

Install the tamper-proof screw

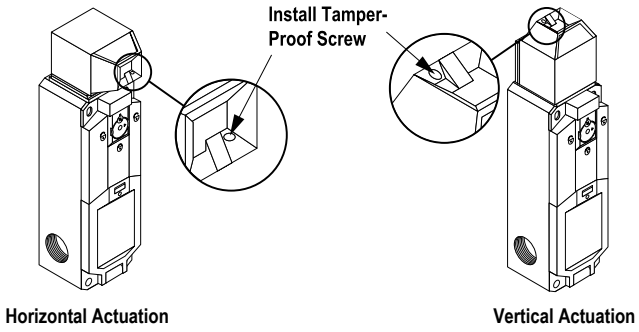

Install the Switch and Actuator

Follow these steps to mount the switch and actuator.

CAUTION: When ambient temperatures are above 40 °C, the housing temperature may be hot enough to cause a dangerous situation. Do not allow the housing to come into contact with people or with flammable material.

1. Verify the mounting surface is flat.
2. Mount the safety switch, tightening the four M5 (#10) screws to 2 N·m.
3. Insert the actuator, in the correct position. The molded end of the actuator should be flush with the edge of the head of the SI-LS42.
4. Connect the actuator to the guard in a tamper-proof manner.
5. Verify no lateral forces are occurring between the actuator and the switch head.
   Refer to the dimensions drawing to see the fully inserted actuator placement.

© Banner Engineering Corp. All rights reserved.

Align the SI-QM-SMFA

All measurements are listed in millimeters, unless noted otherwise. The measurements provided are subject to change.

The flexible actuator mounting flange may be rotated 90° with respect to the actuator position. To rotate, push the actuator tongue into the mounting flange, turn the flange either direction, and release to lock the flange in the new position.

Rotating the actuator

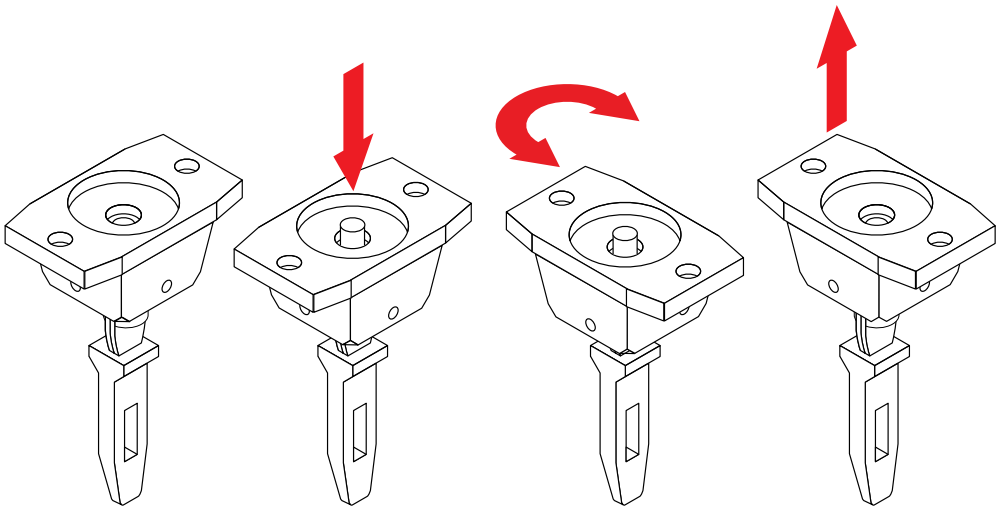

Aligning the SMFA actuator

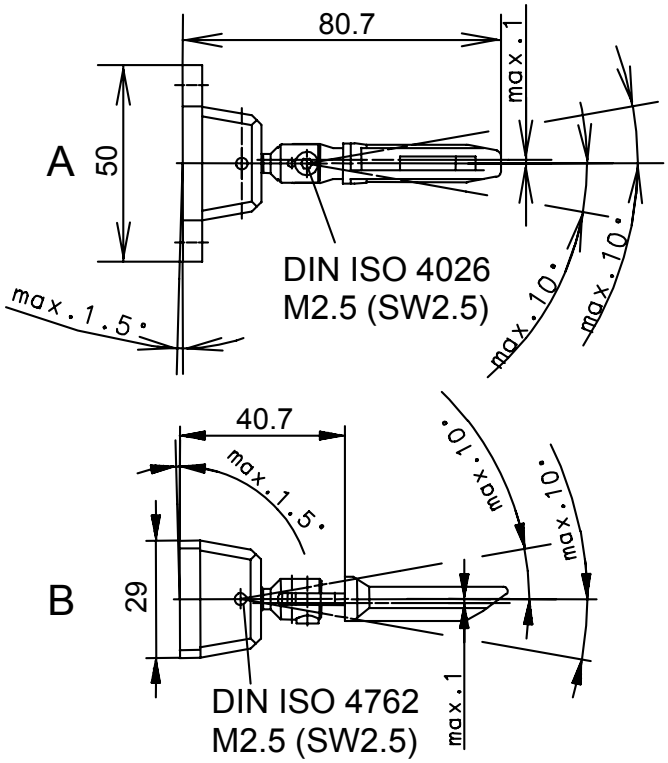

1. Align and fasten **SI-QM-SMFA** to the hinged guard as described in "Install the Switch and Actuator" on page 10.
2. Loosen one of the set screws.
   You may loosen one of the small alignment set screws or the hexagon set screen or both to align the actuator tongue into the head of the interlock switch.

© Banner Engineering Corp. All rights reserved.

- One of the small alignment set screws (whichever one is easiest to access with the door slightly open): Loosen until the actuator tongue can swivel without spring force. The **SI-QM-SMFA** has four holes but only two alignment set screws. The location of the two screws depends on the orientation of the mounting flange (screws are opposite each other).
- Hexagon set screw (ISO 4026): Loosen until the actuator tongue can easily swivel from side to side.

3. Insert the actuator tongue into the mounted switch head until the actuator comes into contact with the head housing, the spring in **SI-QM-SMFA** must not be loaded.
4. Pull the actuator tongue almost out of the switch head by swinging the guard open so that the end of the tongue is still in the opening of the switch head.

   The head must still be equipped with an anti-rotation device.
5. Tighten the small alignment set screw to 1.5 N·m.
6. Open and close the guard.

   The round shaft of the actuator tongue must only move in the spring bearing (actuator housing). The shaft must not support itself on the housing and cause an overload of the actuator tongue.
7. Verify the actuator tongue moves into the switch head without colliding with the head. Verify the opposite small alignment set screw was tightened with a torque of 1.5 N·m.

Operate the Manual Release of the Spring Lock Models

After the switch is installed and before restarting normal operations, verify the unlock mechanism is in the locked ( ) position and the security screw is tight and covered with tamper-resistant lacquer (user supplied).

Models with spring lock/solenoid unlock may be unlocked manually by rotating the manual unlock element on the front of the unit.

Manual release element

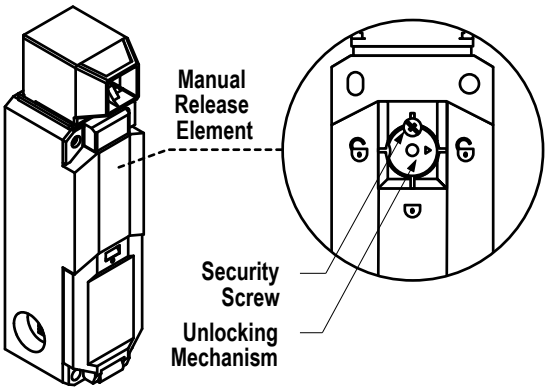

Operate the manual release if the latching device fails.

1. Raise the lock screw enough so that the element can be turned.
2. Turn the release element 90° with a hexagon wrench (M3, SW3). From to .

   The actuator can now be withdrawn. The NC contacts marked with this symbol will open.
3. Turn the release element back to its original position (locked) before restarting normal operation.
4. Screw in the lock screw (0.5 N·m) and seal in place with the screw-locking compound.

© Banner Engineering Corp. All rights reserved.

Electrical Installation

WARNING:

- **Risk of electric shock**
- Use extreme caution to avoid electrical shock. Serious injury or death could result.
- Always disconnect power from the safety system (for example, device, module, interfacing, etc.), guarded machine, and/or the machine being controlled before making any connections or replacing any component. Lockout/tagout procedures might be required. Refer to OSHA 29CFR1910.147, ANSI Z244-1, or the applicable standard for controlling hazardous energy.
- Make no more connections to the device or system than are described in this manual. Electrical installation and wiring must be made by a Qualified Person[1] and must comply with the applicable electrical standards and wiring codes, such as the NEC (National Electrical Code), NFPA 79, or IEC 60204-1, and all applicable local standards and codes.

Access the Wiring Chamber

Opening the wiring chamber

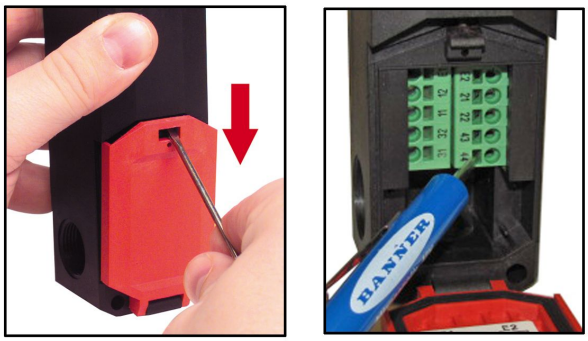

1. Use the hinged door to access the wiring chamber. Insert a flat-bladed screwdriver, as shown, and gently pry down to open.
2. Select the best wiring entrance and, if required, thread in the ½" x 14 NPT conduit adapter (**SI-QS-M20**, included with kits, otherwise ordered separately) or an M20 × 1.5 cable gland (**SI-QS-CGM20**, ordered separately). For more information, see "Accessories" on page 22.
3. Tighten the conduit adapter or cable gland to 6 N·m.

   The switch knockout breaks loose with the final turns of the conduit adapter or cable gland.

Wire the Terminals

The electrical contacts of the switching elements have spring clamp connections. Use a small flathead screwdriver to open and close the connections.

See "SI-LS42 Models" on page 3 for contact assignments. The connections require a stranded flexible wire with or without a ferrule having a cross-section of 0.5 to 1.5 mm^2. Strip length should be 10 mm without a ferrule and 8 mm with a ferrule.

1. Insert the screwdriver blade into the slot next to the desired wiring terminal.
2. Twist the screwdriver blade in the slot to open the terminal jaws; insert the wire.
3. Hold the wire in place and remove the screwdriver blade.

When using the locking mechanism for personal protection, use the contacts marked with . Because the locking element can only go to the engaged position if the actuator is present, this contact signifies the closed position and the locking status of the guard so it can be checked by the monitoring device of the safety circuit (per ISO 14119).

[1] A person who, by possession of a recognized degree or certificate of professional training, or who, by extensive knowledge, training and experience, has successfully demonstrated the ability to solve problems relating to the subject matter and work.

© Banner Engineering Corp. All rights reserved.

When using the locking mechanism for process control purposes (only the fact that the door is closed is used for personnel safety), the contacts marked with the ⊕ symbol can be used, which signals the status of the actuator (present or not).

Connection to a Machine

Perform a risk assessment to determine the means of interfacing the switch(es) with the machine control circuit. Although Banner Engineering always recommends the highest level of safety in any application, it is the responsibility of the user to safely install, operate, and maintain each safety system and comply with all relevant laws and regulations.

To ensure the highest level of reliability (e.g. Control Reliable or Category 4/PL e), we recommend wiring the safety contacts from two safety switches per interlocked guard in a dual-channel connection to a safety module, safety controller, or other safety-related parts of the control system (see "Accessories" on page 22 for a list of safety evaluation devices from Banner Engineering) that comply with the required level of safety performance as shown.

Actuator safety contacts (circle with arrow symbol)

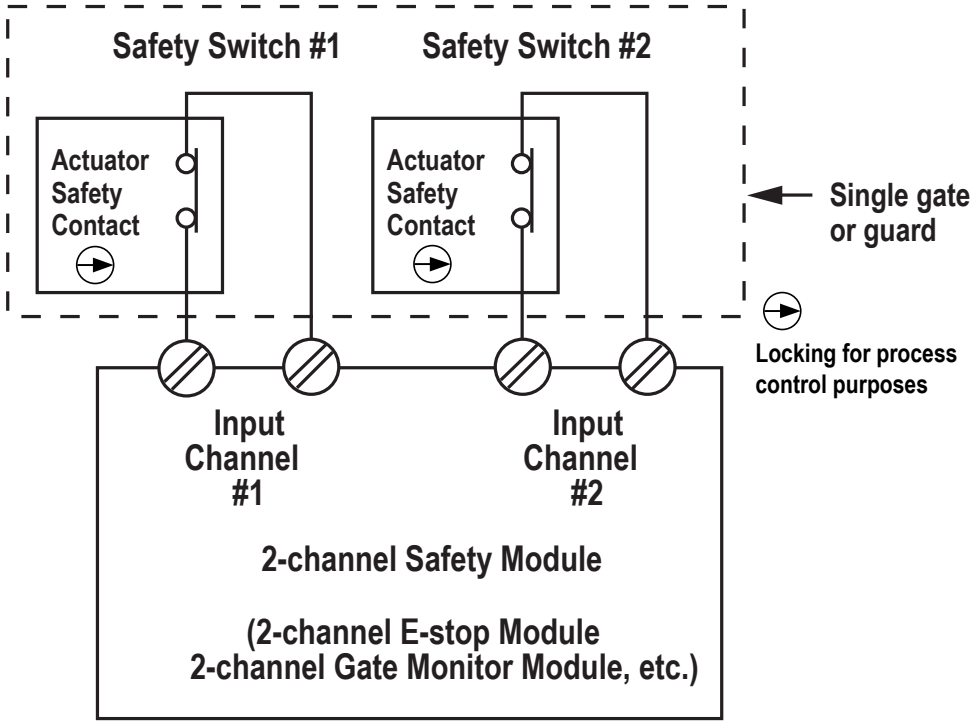

© Banner Engineering Corp. All rights reserved.

Solenoid monitor contacts (lock symbol)

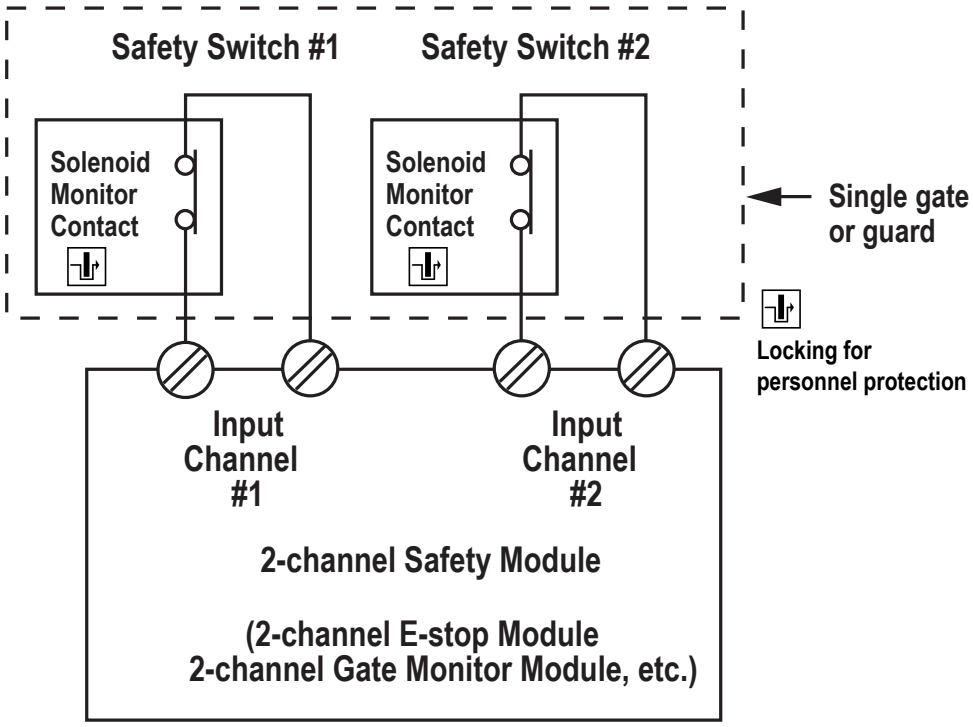

Refer to the installation instructions provided with the safety module for information about the interface of the safety module to the machine stop control elements (MSCE).

Two functions of the safety evaluation device are to provide:

- A means of Monitoring the contacts of both safety switches for contact failure and to prevent the machine from restarting if either switch fails.
- A reset routing after closing the guard and returning the safety contacts to their closed position. This prevents the controlled machinery from restarting by simply reinserting the safety switch actuators. This necessary reset function is required by ANSI B11.0 and NFPA 79 machine safety standards.

Use only positively-driven, normally-closed safety contacts (or) from each switch for connection to the safety module. The normally open contacts may be used for control functions that are not safety related. A typical use is to communicate with a process controller.

Solenoid voltage connects to terminals E1 (+) and E2 (-).

CAUTION:

- **Safety switch installation**
- Using only one safety switch per interlock guard is not recommended.
- Use two safety switches for each interlock guard to achieve control reliability or Safety Category 4 (per ISO 13849-1) of a machine stop circuit.
- In addition, normally-closed (N.C.) safety contacts from each of the two safety switches should be connected to the two separate inputs of a two-channel safety monitoring device. This is required to monitor for safety switch contact failure and to provide the necessary reset routine, as required by IEC 60204-1 and NFPA 79 machine safety standards.

© Banner Engineering Corp. All rights reserved.

WARNING:

- **Connecting safety switches in series**
- Monitoring multiple guards with a series connection of multiple safety interlock switches is not a Safety Category 4 Application (per ISO 13849-1). A single failure can be masked or not detected at all. The loss of a safety stop signal or an inappropriate reset can lead to serious injury or death.
- When such a configuration is used, procedures must be performed regularly to verify proper operation of each switch. Correct all failures immediately (for example, immediately replace a failed switch).

© Banner Engineering Corp. All rights reserved.

Chapter Contents

Checkout Procedures 17
Initial and Daily Checks 17
Periodic Checks 17

Chapter 3 Operating Instructions

Checkout Procedures

Banner Engineering highly recommends performing the System checkouts as described. However, a Qualified Person (or team) should evaluate these generic recommendations, considering their specific application, and determine the appropriate frequency of checkouts. This will generally be determined by a risk assessment, such as the one contained in ANSI B11.0. The result of the risk assessment will drive the frequency and content of the periodic checkout procedures and must be followed.

WARNING:

- **Test multiple safety devices individually**
- Failure to test each safety device individually could result in undetected faults and create an unsafe condition that could result in serious injury or death.
- When two or more safety devices are used, individually actuate each device, causing a stop or open-contact condition, then reset/rearm the safety module (if using manual reset mode). This allows the monitoring circuits to check each device and its wiring to detect faults.

Initial and Daily Checks

Verify the functioning of the safety switch(es) and the interlocked guard (if applicable) at designated periods. Verify at initial installation by a *qualified person*, verify daily or before each use by a *designated person*, and as part of the regular periodic checkout procedure listed below to ensure proper operation.

A *qualified person* possesses a recognized degree or certificate or has extensive knowledge, training, and experience to be able to solve problems relating to the safety switch installation. A *designated person* is identified in writing by the employer as being appropriately trained to perform a specified checkout procedure.

1. Inspect for breakage of the switch body or actuator
2. Verify good alignment and full engagement of the actuator
3. Confirmation that the safety switch is not being used as an end stop
4. Inspect for loosening, corrosion, or damage to the mounting hardware of the switch body and actuator
5. Verify that it is not possible to reach any hazard point through an opened guard (or any opening) before hazardous machine motion has completely stopped
6. Verify switch(es) operation per specific application. For example, the machine cycle stops and/or can not be initiated when the actuator is removed from the switch body.
7. If more than one safety switch(es) and the interlocked guard is used, perform this procedure individually for EACH device.

Periodic Checks

A *qualified person* (as defined above) should check for the following on a periodic schedule determined by the user, based upon the severity of the operating environment and the frequency of switch actuations. At a minimum, this should take place once a year (lockout/tagout procedures for controlling hazardous energy may be required):

1. Inspect the wiring chamber for signs of contamination, deterioration, loose connections, or damage
2. Inspect the sealing at the cable entry and all electrical wiring for continuity and damage

© Banner Engineering Corp. All rights reserved.

3. Verify that wiring and installation conforms to the instructions in this document and that there are no signs of tampering or defeat
4. Perform the initial/daily checkout listed above

See also the machine manufacturer's recommendations for additional instructions. If any of these checks cannot be verified, do not attempt to use the machine until the defect or problem has been corrected.

© Banner Engineering Corp. All rights reserved.

Chapter Contents

Dimensions..... 20

Chapter 4 SI-LS42 Specifications

Contact Rating

Utilization Categories: AC-15, U_e/L_e 230 V/2.5 A

Rated isolation voltage (U_i): 250 V

Conventional thermal current (Ithe): 5 A

Rated impulse withstand voltage (Uimp): 2.5 kV

Maximum making current (4 contacts): 10 A

Rated conditional short-circuit current: 1000 A

Direct/Positive Opening Action (circle with arrow) per IEC 60947-5-1, Annex K

Contact Material

Silver-nickel alloy

Short Circuit Protection

4 A general purpose fuse (rated gL per IEC DIN EN 60269-1)

Electrical Protection Class

II, double insulated

Solenoid Power Consumption

Switch operations: 600/h max

Temperature class: F (155 °C)

Operating voltage: 110/230 V AC -15%/+10%

Inrush power consumption 65 VA (0.1 s)
Permanent power consumption 8 VA

Operating voltage: 24 V AC/DC -15%/+10%

Inrush power consumption 12 VA (0.2 s)
Permanent power consumption 4.4 VA

Maximum Actuator Speed

0.5 m/second (19.7 in/second)

Minimum Actuator Engagement Radius

In-line actuators: 400 mm (16 in)

Flexible actuators: 150 mm (6 in)

Actuator Extraction Force

≤ 1500 Newtons (337 lbf) when locked (acc. to GS-ET-19)

≥ 27 N (6 lbf) when unlocked

Mechanical Life

1 x 10^6 switching cycles

B10d: 2 × 10^6 cycles (NC contacts) at DC-13; 24 V; I_{e2} = 0.1 A

Wire Connections

10 spring-clamp connections

0.5-1.5 mm^2 max. flexible (stranded) (16 AWG max)

Cable Entry

M20 × 1.5 threaded entrance (x3 ports)

Adapter supplied to convert M20 × 1.5 to 1/2" - 14 NPT

Construction

Enclosure: Thermoplastic GV (UL94-V0)

Actuating Head: Thermoplastic GV (exterior) / Zn-GD (internal cam)

(GV = Glass fiber-reinforced polymide thermoplastic housing, UL 94-V0 rating)

(Zn-GD = Zinc-diecast)

Weight

approximately 0.34 kg

Operating Conditions

–25 °C to +70 °C (–13 °F to +158 °F)

Environmental Rating

IP67 (acc. to IEC/EN 60529) (with suitable screw)

Applicable Standards

IEC 60947-1

DIN EN 60947-1

IEC 60947-5-1

DIN EN 60947-5-1

VDE 0660 T100/T200

GS-ET-19

Certifications

Banner Engineering BV
Park Lane, Culliganlaan 2F bus 3
1831 Diegem, BELGIUM

Turck Banner LTD Blenheim House
Blenheim Court
Wickford, Essex SS11 8YT
GREAT BRITAIN

c us B300 (same polarity)

Required Overcurrent Protection

WARNING: Electrical connections must be made by qualified personnel in accordance with local and national electrical codes and regulations.

Overcurrent protection is required to be provided by end product application per the supplied table.

Overcurrent protection may be provided with external fusing or via Current Limiting, Class 2 Power Supply.

Supply wiring leads < 24 AWG shall not be spliced.

For additional product support, go to www.bannerengineering.com.

Supply Wiring (AWG)	Required Overcurrent Protection (A)	Supply Wiring (AWG)	Required Overcurrent Protection (A)
20	5.0	26	1.0
22	3.0	28	0.8
24	1.0	30	0.5

© Banner Engineering Corp. All rights reserved.

Dimensions

All measurements are listed in millimeters, unless noted otherwise. The measurements provided are subject to change.

Dimensions for the SI-LS42 models

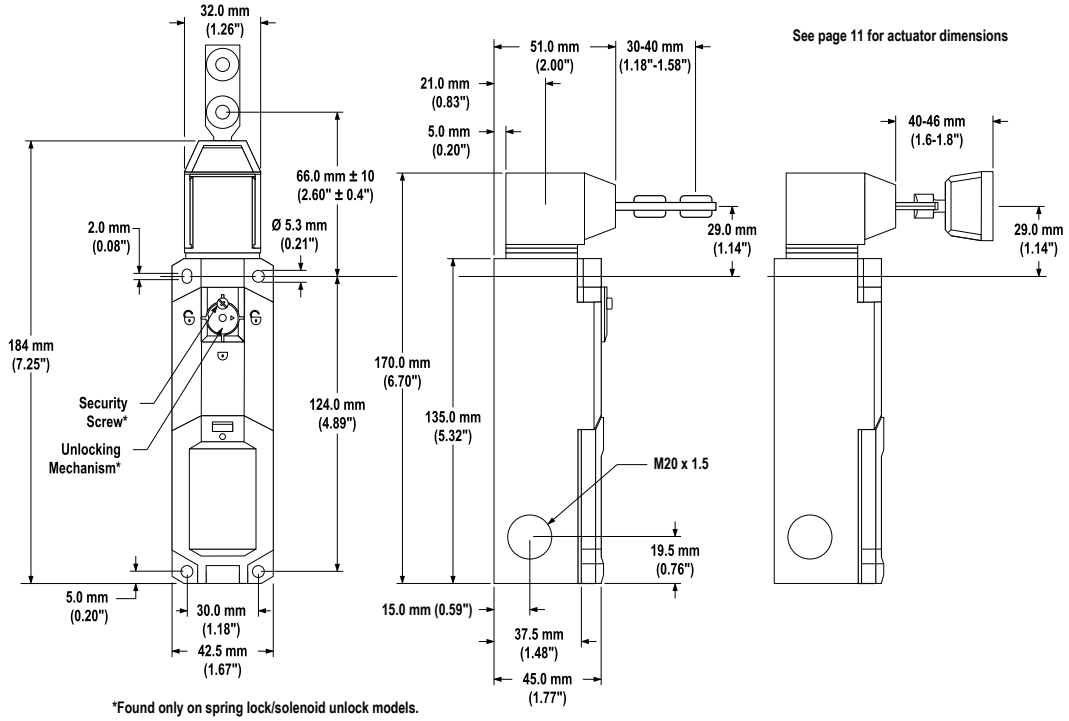

Dimensions for the SI-QM-SMFA model actuator

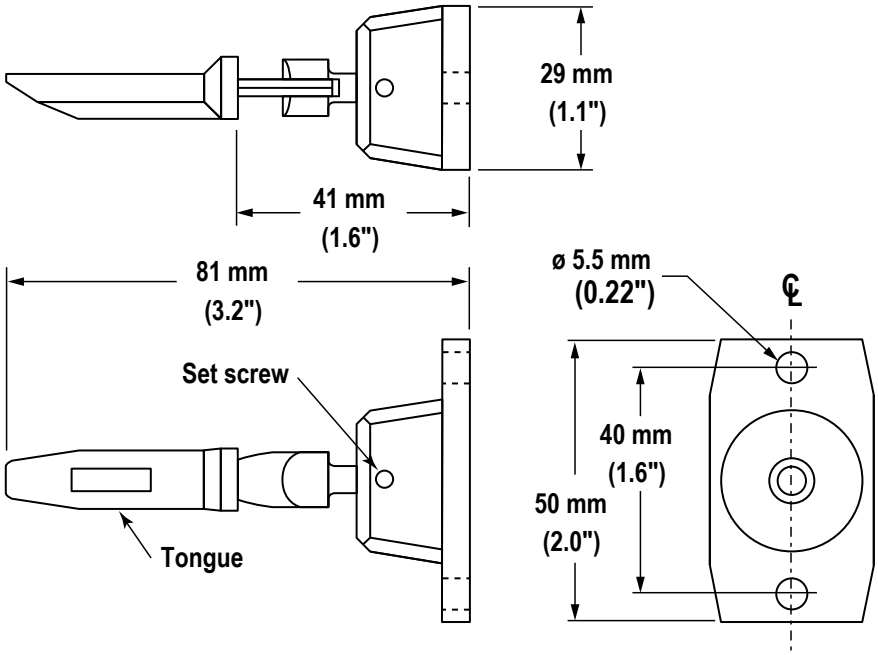

© Banner Engineering Corp. All rights reserved.

Dimensions for the SI-QM-SSA model actuator

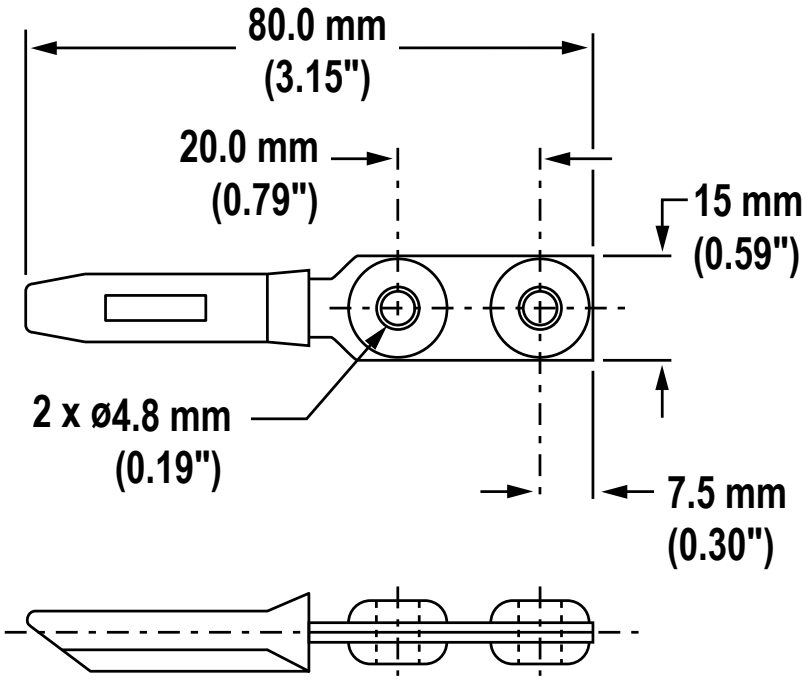

Dimensions for the SI-QM-SB model actuator

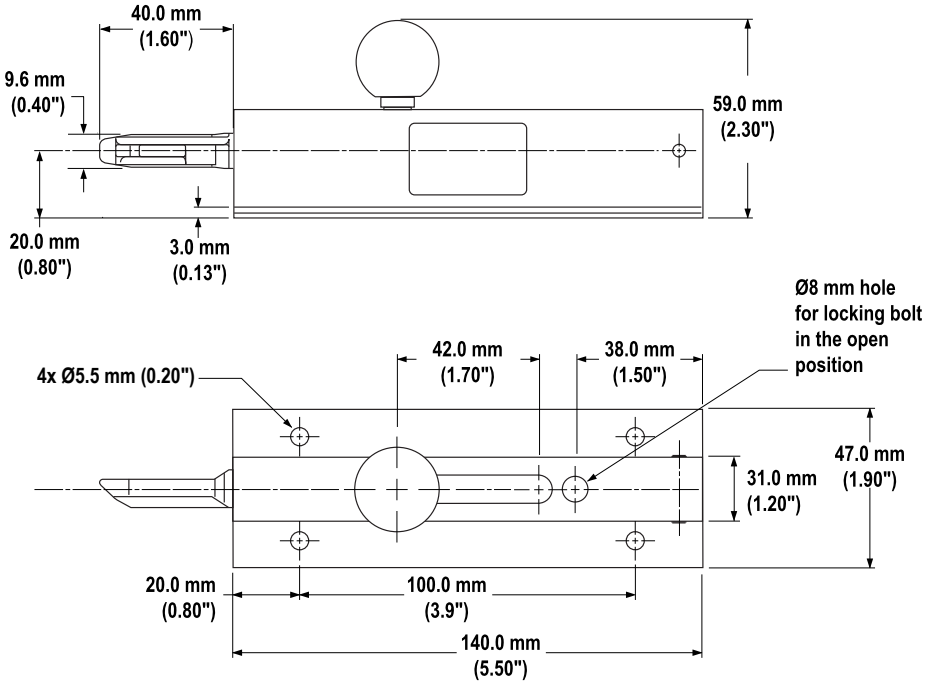

© Banner Engineering Corp. All rights reserved.

Chapter Contents

Actuators 22
Plastic Conduit Adapter 22
Cable Glands 22
Universal (Input) Safety Modules 22
Safety Controllers 23
Replacement Parts 23

Chapter 5 Accessories

Actuators

Model	Description	Minimum Approach Radius
SI-QM-SSA	Straight Actuator	400 mm (16 in)
SI-QM-SMFA	Fully Flexible Actuator	150 mm (6 in)
SI-QM-SB	Rigid in-line metal actuator used for doors or covers. Slide-bolt design for use in heavy-duty applications where alignment is difficult to maintain.	

Plastic Conduit Adapter

Model	Size	Thread Conversion	Dimensions	Used With
SI-QS-M20	½ in-14 NPT Plastic	M20 × 1.5 to ½ in-14 NPT	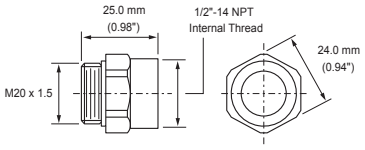	SI-GL42 Safety Interlock Switch SI-LS42 Safety Interlock Switch SI-LS100 Safety Interlock Switch SI-QS90 Safety Interlock Switch RP-LS42 Rope Pull Switch

Cable Glands

Model	Size	For Cable Diameter	Dimensions	Used With
SI-QS-CGM20	M20 × 1.5 Plastic	5.0 to 12.0 mm (0.20 to 0.47 inches)	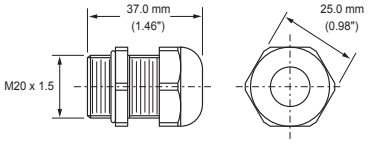	RP-LS42 Rope Pull Switch SI-GL42 Safety Interlock Switch SI-LS42 Safety Interlock Switch SI-LS100 Safety Interlock Switch SI-QS90 Safety Interlock Switch

Universal (Input) Safety Modules

Safety modules provide forced-guided, mechanically-linked relay (safety) outputs for the system when an external manual reset (latch) is desired or external device monitoring is required in the application.

See datasheet p/n 141249 or 60606 for more information.

© Banner Engineering Corp. All rights reserved.

Model	Description
UM-FA-9A	3 Normally Open (NO) Redundant-output 6 A Contacts
UM-FA-11A	2 Normally Open (NO) Redundant-output 7 A Contacts, plus 1 Normally Closed (NC) Auxiliary Contact
ES-FA-9AA	3 Normally Open (NO) Redundant-output 6 A Contacts
ES-FA-11AA	2 Normally Open (NO) Redundant-output 7 A Contacts, plus 1 Normally Closed (NC) Auxiliary Contact

Safety Controllers

Safety Controllers provide a fully configurable, software-based safety logic solution for monitoring safety and non-safety devices.

For additional models and XS26 expansion modules, see instruction manual p/n 174868.

Safety controller models

Non-Expandable Models	Expandable Models	Description
SC26-2	**XS26-2**	26 convertible I/O and 2 redundant solid-state safety outputs
SC26-2d	**XS26-2d**	26 convertible I/O and 2 redundant solid-state safety outputs with display
SC26-2e	**XS26-2e**	26 convertible I/O and 2 redundant solid-state safety outputs with Ethernet
SC26-2de	**XS26-2de**	26 convertible I/O and 2 redundant solid-state safety outputs with display and Ethernet
SC10-2roe		10 inputs, 2 redundant relay safety outputs (3 contacts each) (ISD and Ethernet compatible)
	XS26-ISDd	26 inputs, 2 redundant solid-state safety outputs with display, Ethernet, and 8 ISD channels

Replacement Parts

Model	Description	Used with Switch Models	Dimensions
SI-LS42-COVER	Replacement Terminal Cover	All	N/A
SI-LS42-SCREW OW	Replacement One-Way Screw	All	N/A

© Banner Engineering Corp. All rights reserved.

Chapter Contents

Repairs 24
EU/UK Declaration of Conformity (DoC) 24
Banner Engineering Corp Limited Warranty 24

Chapter 6 Product Support and Maintenance

Repairs

Do not attempt any repairs to the safety interlocking switch. It contains no field-replaceable components. Return it to Banner Engineering for warranty repair or replacement.

Contact Banner Factory Application Engineering. They will attempt to troubleshoot the system from your description of the problem. If they conclude that a component is defective, they will issue a return merchandise authorization (RMA) number for your paperwork, and give you the proper shipping address.

> **IMPORTANT:** Pack the safety switches carefully. **Damage that occurs in return shipping is not covered by warranty.**

EU/UK Declaration of Conformity (DoC)

Banner Engineering Corp. herewith declares that these products are in conformity with the provisions of the listed directives and all essential health and safety requirements have been met. For the complete DoC, please go to www.bannerengineering.com.

Product	Directive
SI-LS42 Series Locking-Style Safety Interlock Switch	EU: 2006/42/EC
	UKCA: Machinery (Safety) Regulations 2008

Representative in EU: Spiros Lachandidis, Managing Director, **Banner Engineering BV** Park Lane | Culliganlaan 2F bus 3 | 1831 Diegem, BELGIUM

Representative in UK: Tony Coghlan, Managing Director, **Turck Banner LTD** Blenheim House | Blenheim Court | Wickford, Essex SS11 8YT | Great Britain

Banner Engineering Corp Limited Warranty

Banner Engineering Corp. warrants its products to be free from defects in material and workmanship for one year following the date of shipment. Banner Engineering Corp. will repair or replace, free of charge, any product of its manufacture which, at the time it is returned to the factory, is found to have been defective during the warranty period. This warranty does not cover damage or liability for misuse, abuse, or the improper application or installation of the Banner product.

THIS LIMITED WARRANTY IS EXCLUSIVE AND IN LIEU OF ALL OTHER WARRANTIES WHETHER EXPRESS OR IMPLIED (INCLUDING, WITHOUT LIMITATION, ANY WARRANTY OF MERCHANTABILITY OR FITNESS FOR A PARTICULAR PURPOSE), AND WHETHER ARISING UNDER COURSE OF PERFORMANCE, COURSE OF DEALING OR TRADE USAGE.

This Warranty is exclusive and limited to repair or, at the discretion of Banner Engineering Corp., replacement. **IN NO EVENT SHALL BANNER ENGINEERING CORP. BE LIABLE TO BUYER OR ANY OTHER PERSON OR ENTITY FOR ANY EXTRA COSTS, EXPENSES, LOSSES, LOSS OF PROFITS, OR ANY INCIDENTAL, CONSEQUENTIAL OR SPECIAL DAMAGES RESULTING FROM ANY PRODUCT DEFECT OR FROM THE USE OR INABILITY TO USE THE PRODUCT, WHETHER ARISING IN CONTRACT OR WARRANTY, STATUTE, TORT, STRICT LIABILITY, NEGLIGENCE, OR OTHERWISE.**

Banner Engineering Corp. reserves the right to change, modify or improve the design of the product without assuming any obligations or liabilities relating to any product previously manufactured by Banner Engineering Corp. Any misuse, abuse, or improper application or installation of this product or use of the product for personal protection applications when the product is identified as not intended for such purposes will void the product warranty. Any modifications to this product without prior express approval by Banner Engineering Corp will void the product warranties. All specifications published in this document are subject to change; Banner reserves the right to modify product specifications or update documentation at any time. Specifications and product information in English supersede that which is provided in any other language. For the most recent version of any documentation, refer to: www.bannerengineering.com.

For patent information, see www.bannerengineering.com/patents.

© Banner Engineering Corp. All rights reserved.

Document title: SI-LS42 Series Locking-Style Safety Interlock Switch Instruction Manual
Part number: 155400
Revision: H
Original Instructions
© Banner Engineering Corp. All rights reserved.

© Banner Engineering Corp. All rights reserved.

LinkedIn

Twitter

Facebook



© 2024. All rights reserved.
www.bannerengineering.com