SGS Safety Grid System (Emitter-Receiver Models) Instruction Manual

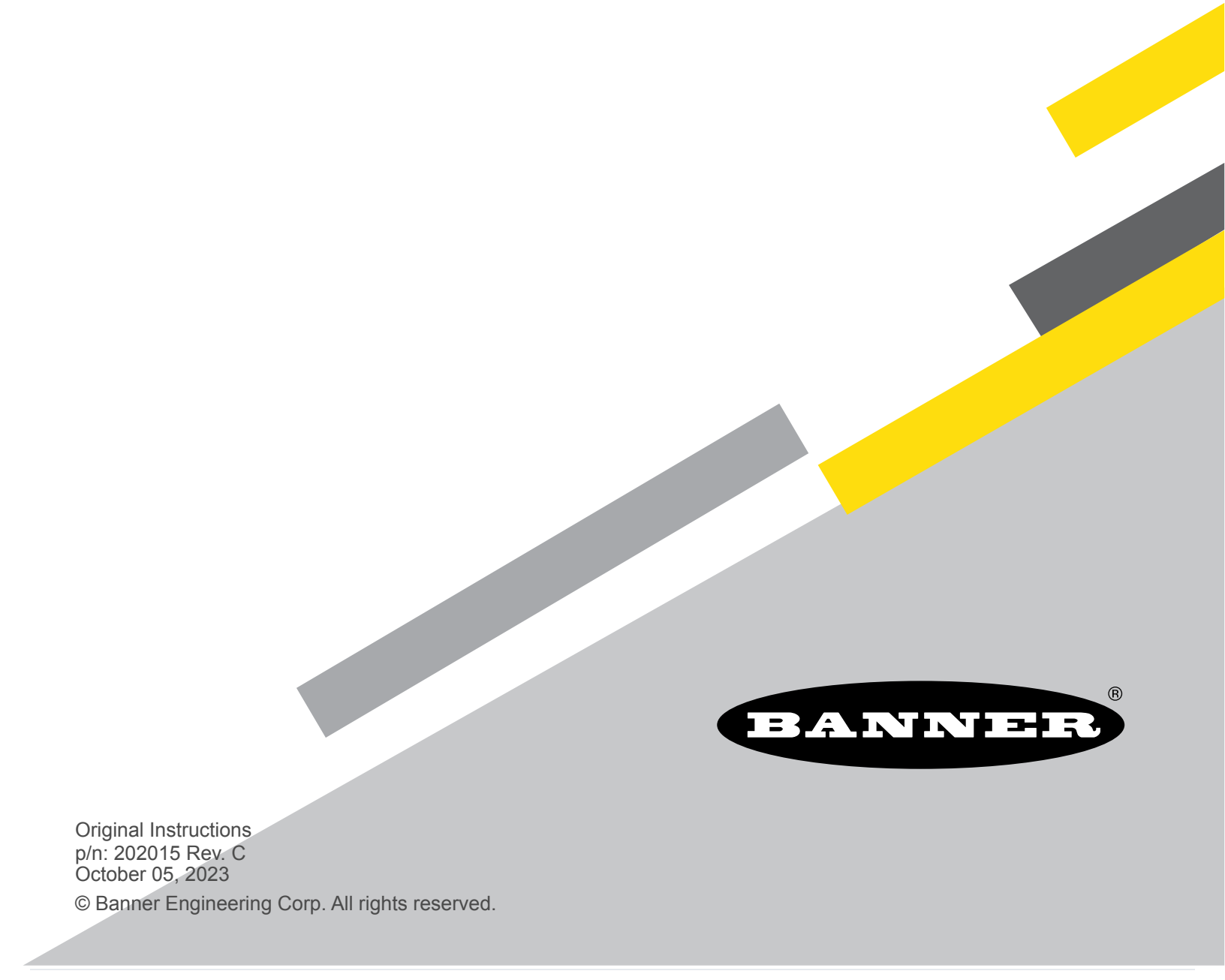

Original Instructions
p/n: 202015 Rev. C
October 05, 2023

© Banner Engineering Corp. All rights reserved.

ПРОМЭЛЕКТРОНИКА/ sales@prom-elec.com

Contents

Chapter 1 About This Document

Important... Read This Before Proceeding! 5
Use of Warnings and Cautions 5
EU Declaration of Conformity (DoC) 6

Chapter 2 Standards and Regulations

Applicable US Standards 7
Applicable OSHA Regulations 8
International/European Standards 8

Chapter 3 Product Overview

Models 9
Appropriate Applications and Limitations 10
- Appropriate Applications 11
- Examples: Inappropriate Applications 11
- Control Reliability: Redundancy and Self-Checking 11

Operating Features 11
- Selectable Auto or Manual Start/Restart 11
- External Device Monitoring (EDM) 12
- Scan Code Configuration 12
- Status Indicators 12

Chapter 4 Mechanical Installation

Mechanical Installation Considerations 15
- Safety (Minimum) Distance 15
- Calculating Safety Distance Formula and Examples 16
- Example Calculation 16
- Reducing or Eliminating Pass-Through Hazards 17
- Supplemental Safeguarding 18
- Reset Switch Location 19
- Adjacent Reflective Surfaces 20
- Use of Corner Mirrors 21
- Emitter and Receiver Orientation 21
- Installing Adjacent Systems 22

Mounting System Components 23
- Mounting Hardware 23
- Mounting the End-Mount Brackets 23
- Sensor Mounting and Mechanical Alignment 24
- Mounting Dimensions 24

Chapter 5 Electrical Installation and Testing

Routing Cordsets 25
Initial Electrical Connections 26
Initial Checkout Procedure 26
- Configuring the System for Initial Checkout 26
- Apply (Initial) Power to the System 27
- Optically Align the Components 27
- Optically Align the Components with Corner Mirrors 29
- Conduct a Trip Test 30

Electrical Connections to the Guarded Machine 31
- OSSD Output Connections 31
- Final Switching Devices (FSD) Interfacing Connections 32
- Machine Primary Control Elements and EDM Input 32
- External Device Monitoring (EDM) 33
- Select the Scan Code 34
- Preparing for System Operation 34
- Sensor Interchangeability 34

Wiring Diagrams 35
- Reference Wiring Diagrams 35
- Generic Wiring Diagram for the Emitter 35
- Generic Wiring for a Receiver and Safety Module/Controller or Safety PLC/PES 36
- Generic Wiring for a Receiver and Redundant FSD 37
- Generic Wiring for a Receiver and IM-T-9A Interface Module 38

Chapter 6 System Operation

Security Protocol 39
System Configuration Settings 39
Reset Procedures 40
Reset the Receiver or Active Transceiver After a Lockout 40
Reset in Manual Start/Restart Mode 40
Normal Operation 41
System Power-Up 41
Run Mode 41
Periodic Checkout Requirements 41

Chapter 7 Product Support and Maintenance

Cleaning 43
Disposal 43
Warranty Service 43
Banner Engineering Corp Limited Warranty 43
Contact Us 44

Chapter 8 Troubleshooting

Error Codes 45
Lockout Conditions 46
Recovery Procedure 47
Electrical and Optical Noise 47
Check for Sources of Electrical Noise 47
Check for Optical Noise Sources 48

Chapter 9 Checkout Procedures

Schedule of Checkouts 49
Perform a Commissioning Checkout 49

Chapter 10 Specifications

General Specifications 51
Dimensions 52

Chapter 11 Accessories

Bracket and Test Piece 55
Cordsets 55
Single-Ended (Machine Interface) Cables 56
Double-Ended (Sensor Interconnect) Cordsets 56
Splitter Cordsets 56
Bulkhead Connector 57
Universal (Input) Safety Modules 57
Safety Controllers 57
Interface Modules 58
Contactors 58
Alignment Aids 58
EZ-LIGHTS® for SGS 59
SSM Series Corner Mirrors 60
MSA Series Stands 61

Chapter 12 Safety Glossary 63

Blank page

Chapter Contents

Important... Read This Before Proceeding! 5
Use of Warnings and Cautions 5
EU Declaration of Conformity (DoC) 6

Chapter 1 About This Document

Important... Read This Before Proceeding!

It is the responsibility of the machine designer, controls engineer, machine builder, machine operator, and/or maintenance personnel or electrician to apply and maintain this device in full compliance with all applicable regulations and standards. The device can provide the required safeguarding function only if it is properly installed, properly operated, and properly maintained. This manual attempts to provide complete installation, operation, and maintenance instructions. *Reading the manual in its entirety is highly recommended to ensure proper understanding of the operation, installation, and maintenance.* Please direct any questions regarding the application or use of the device to Banner Engineering Corp..

For more information regarding U.S. and international institutions that provide safeguarding application and safeguarding device performance standards, see "Standards and Regulations" on page 7.

WARNING:

- The user is responsible for following these instructions.
- **Failure to follow any of these responsibilities may potentially create a dangerous condition that could result in serious injury or death.**
- Carefully read, understand, and comply with all instructions for this device.
- Perform a risk assessment that includes the specific machine guarding application. Guidance on a compliant methodology can be found in ISO 12100 or ANSI B11.0.
- Determine what safeguarding devices and methods are appropriate per the results of the risk assessment and implement per all applicable local, state, and national codes and regulations. See ISO 13849-1, ANSI B11.19, and/or other appropriate standards.
- Verify that the entire safeguarding system (including input devices, control systems, and output devices) is properly configured and installed, operational, and working as intended for the application.
- Periodically re-verify, as needed, that the entire safeguarding system is working as intended for the application.

Use of Warnings and Cautions

The precautions and statements used throughout this document are indicated by alert symbols and must be followed for the safe use of the SGS Safety Grid System. Failure to follow all precautions and alerts may result in unsafe use or operation. The following signal words and alert symbols are defined as follows:

Signal Word and Symbol	Definition
WARNING:	**Warnings** refer to potentially hazardous situations which, if not avoided, could result in serious injury or death.
CAUTION:	**Cautions** refer to potentially hazardous situations which, if not avoided, could result in minor or moderate injury.

These statements are intended to inform the machine designer and manufacturer, the end user, and maintenance personnel, how to avoid misapplication and effectively apply the SGS Safety Grid System to meet the various safeguarding application requirements. These individuals are responsible to read and abide by these statements.

© Banner Engineering Corp. All rights reserved.

EU Declaration of Conformity (DoC)

Banner Engineering Corp. herewith declares that these products are in conformity with the provisions of the listed directives and all essential health and safety requirements have been met. For the complete DoC, please go to www.bannerengineering.com.

Product	Directive
SGS Safety Grid System	EU: Machinery Directive 2006/42/EC

Representative in EU: Spiros Lachandidis, Managing Director, **Banner Engineering BV** Park Lane | Culliganlaan 2F bus 3 | 1831 Diegem, BELGIUM

© Banner Engineering Corp. All rights reserved.

Chapter Contents

Applicable US Standards 7
Applicable OSHA Regulations 8
International/European Standards 8

Chapter 2 Standards and Regulations

The list of standards below is included as a convenience for users of this Banner device. Inclusion of the standards below does not imply that the device complies specifically with any standard, other than those specified in the Specifications section of this manual.

Applicable US Standards

ANSI B11.0 Safety of Machinery, General Requirements, and Risk Assessment

ANSI B11.1 Mechanical Power Presses

ANSI B11.2 Hydraulic Power Presses

ANSI B11.3 Power Press Brakes

ANSI B11.4 Shears

ANSI B11.5 Iron Workers

ANSI B11.6 Lathes

ANSI B11.7 Cold Headers and Cold Formers

ANSI B11.8 Drilling, Milling, and Boring

ANSI B11.9 Grinding Machines

ANSI B11.10 Metal Sawing Machines

ANSI B11.11 Gear Cutting Machines

ANSI B11.12 Roll Forming and Roll Bending Machines

ANSI B11.13 Single- and Multiple-Spindle Automatic Bar and Chucking Machines

ANSI B11.14 Coil Slitting Machines

ANSI B11.15 Pipe, Tube, and Shape Bending Machines

ANSI B11.16 Metal Powder Compacting Presses

ANSI B11.17 Horizontal Extrusion Presses

ANSI B11.18 Machinery and Machine Systems for the Processing of Coiled Strip, Sheet, and Plate

ANSI B11.19 Performance Criteria for Safeguarding

ANSI B11.20 Manufacturing Systems

ANSI B11.21 Machine Tools Using Lasers

ANSI B11.22 Numerically Controlled Turning Machines

ANSI B11.23 Machining Centers

ANSI B11.24 Transfer Machines

© Banner Engineering Corp. All rights reserved.

ANSI/RIA R15.06 Safety Requirements for Industrial Robots and Robot Systems

NFPA 79 Electrical Standard for Industrial Machinery

ANSI/PMMI B155.1 Package Machinery and Packaging-Related Converting Machinery — Safety Requirements

Applicable OSHA Regulations

OSHA Documents listed are part of: Code of Federal Regulations Title 29, Parts 1900 to 1910

OSHA 29 CFR 1910.212 General Requirements for (Guarding of) All Machines

OSHA 29 CFR 1910.147 The Control of Hazardous Energy (lockout/tagout)

OSHA 29 CFR 1910.217 (Guarding of) Mechanical Power Presses

International/European Standards

EN ISO 12100 Safety of Machinery – General Principles for Design — Risk Assessment and Risk Reduction

ISO 13857 Safety of Machinery – Safety Distances to Prevent Hazard Zones Being Reached

ISO 13850 (EN 418) Emergency Stop Devices, Functional Aspects – Principles for Design

ISO 13851 Two-Hand Control Devices – Principles for Design and Selection

IEC 62061 Functional Safety of Safety-Related Electrical, Electronic and Programmable Control Systems

EN ISO 13849-1:2015 Safety-Related Parts of Control Systems

EN 13855 (EN 999) The Positioning of Protective Equipment in Respect to Approach Speeds of Parts of the Human Body

ISO 14119 (EN 1088) Interlocking Devices Associated with Guards – Principles for Design and Selection

EN 60204-1 Electrical Equipment of Machines Part 1: General Requirements

IEC 61496 Electro-sensitive Protection Equipment

IEC 60529 Degrees of Protection Provided by Enclosures

IEC 60947-1 Low Voltage Switchgear – General Rules

IEC 60947-5-1 Low Voltage Switchgear – Electromechanical Control Circuit Devices

IEC 60947-5-5 Low Voltage Switchgear – Electrical Emergency Stop Device with Mechanical Latching Function

IEC 61508 Functional Safety of Electrical/Electronic/Programmable Electronic Safety-Related Systems

IEC 62046 Safety of Machinery – Applications of Protective Equipment to Detect the Presence of Persons

ISO 3691-4 Industrial Trucks—Safety Requirements and Verification, Part 4 Driverless Industrial trucks and their Systems

© Banner Engineering Corp. All rights reserved.

Chapter Contents

Models 9
Appropriate Applications and Limitations 10
Operating Features 11

Chapter 3 Product Overview



Banner SGS Safety Grid System is a two-piece (emitter and receiver), redundant, microprocessor-controlled, opposed-mode optoelectronic "light grid". Standard models are available in 2 beam (500 mm beam spacing), 3 beam (400 mm beam spacing), or 4 beam (300 mm and 400 mm beam spacing) systems.

Emitters have a row of synchronized modulated infrared (invisible) light-emitting diodes (LEDs) in a robust metal housing. Receivers have a corresponding row of synchronized photodetectors. The sensing range spans from 0.5 m to 30 m (20 in to 98 ft) or 6 m to 60 m (20 ft to 197 ft), depending on the model. The sensing range decreases if corner mirrors are used.

The SGS can be configured for Trip Output (Automatic start/restart) or Latch Output (Manual start/restart). In typical operation, if any part of an operator's body (or any opaque object) of more than a pre-determined cross section is detected, the solid-state output signal switching device (OSSD) safety outputs turn Off. These safety outputs are connected to the guarded machine's final switching devices (FSDs) that control the machine primary control elements (MPCEs), which immediately stop the motion of the guarded machine.

SGS sensors are extensively FMEA (Failure Mode and Effects Analysis) tested to establish an extremely high degree of confidence that when properly installed, no system component (even if it should ever fail) can cause a failure to danger.

SGS systems (receivers with 8-pin M12 QD) do not require an external controller when using the external device monitoring (EDM) function. This function ensures the fault detection capability required by U.S. Control Reliability and ISO 13849-1 Categories 3 or 4 and PL d or e for controlling final switching devices (FSDs) or Machine Primary Control Elements (MPCEs).

When the SGS is connected to a self-checking safety module, safety controller, or safety PLC/PES, that conforms to the level of performance required by the risk assessment, the EDM function of the SGS is not used. Examples include the UM-FA-9A/-11A safety module, SC10-2roe or XS/SC26-2 safety controller for applications requiring Control Reliability and/or ISO 13849-1 Categories 3 or 4 and PL d or e.

Electrical connections (power, ground, inputs and outputs) are made via M12 quick-disconnect cordsets.

Both the emitter and receiver feature 7-segment Diagnostic Displays and individual LEDs to provide continuous indication of operating status, configuration and error conditions.

Models

An SGS Safety Grid System refers to a compatible emitter and receiver of equal length and resolution (available in pairs only), including their cordsets. Mounting hardware must be ordered separately. Interfacing solutions include IM-T-.. modules, redundant positively guided contactors, safety modules/controllers, and muting modules.

WARNING: The emitters and receivers are tested and sold only as a unique pair (with matching serial numbers) and must not be used with a mismatched emitter/receiver. The range and the Effective Aperture Angle (EAA) can not be guaranteed if mismatched emitters and receivers are used. **Failure to follow these instructions could result in serious injury or death.**

SGS Safety Grid System pair model numbers include the following items:

© Banner Engineering Corp. All rights reserved.

Qty	Description
1	SGS Safety Grid System Receiver
1	SGS Safety Grid System Emitter
1	Literature packet with MiniDVD

The following items, ordered separately from the sensors, are required for a complete system.

Qty	Description
1	End cap bracket kit (SGSA-MBK-10-4), includes four brackets per kit
2	Appropriate cables

See "Accessories" on page 55 for a list of brackets and cordsets.

SGS Safety Grid System Emitter/Receiver Models

Model	Beams	Beam Spacing (mm)	Protected Height (mm)	Response Time (ms) (with no scan code)	Response Time (ms) (with scan code)	Operating Range (m)
SGSSP2-500Q88	2	500	500	12	19	0.5 to 30
SGSSP3-400Q88	3	400	800	13	22	
SGSSP4-300Q88	4	300	900	14	25	
SGSSP4-400Q88	4	400	1200	14	25	
SGSXP2-500Q88	2	500	500	12	19	6 to 60
SGSXP3-400Q88	3	400	800	13	22	
SGSXP4-300Q88	4	300	900	14	25	
SGSXP4-400Q88	4	400	1200	14	25	

For dimensions, see "Dimensions" on page 52.

Appropriate Applications and Limitations

WARNING: Read this Section Carefully Before Installing the System
If all mounting, installation, interfacing, and checkout procedures are not followed properly, the Banner device cannot provide the protection for which it was designed. The user is responsible for ensuring that all local, state, and national laws, rules, codes, or regulations relating to the installation and use of this control system in any particular application are satisfied. Ensure that all legal requirements have been met and that all technical installation and maintenance instructions contained in this manual are followed.

The user has the sole responsibility to ensure that this Banner device is installed and interfaced to the guarded machine by Qualified Persons[1], in accordance with this manual and applicable safety regulations. **Failure to follow these instructions could result in serious injury or death.**

The Banner SGS is intended for safeguarding applications as determined by a risk assessment. It is the user's responsibility to verify whether the safeguarding is appropriate for the application and is installed, as instructed by this manual, by a Qualified Person.

The SGS ability to perform its safeguarding function depends upon the appropriateness of the application and upon its proper mechanical and electrical installation and interfacing to the guarded machine. **If all mounting, installation, interfacing, and checkout procedures are not followed properly, the SGS cannot provide the protection for which it was designed**.

[1] A person who, by possession of a recognized degree or certificate of professional training, or who, by extensive knowledge, training and experience, has successfully demonstrated the ability to solve problems relating to the subject matter and work.

© Banner Engineering Corp. All rights reserved.

WARNING:
- **Access and Perimeter Safeguard Installation**
- **Failure to follow these instructions could result in serious injury or death.**
- If an SGS Safety Grid System is installed for use as an access or perimeter guard (where a pass-through hazard may exist, see "Reducing or Eliminating Pass-Through Hazards" on page 17), configure the SGS for Manual Start/Restart (Latch Output). The dangerous machine motion can be initiated by normal means only after the safeguarded area is clear of individuals and the SGS Safety Grid System has been manually reset.

Appropriate Applications

This SGS Safety Grid System is typically used in access guarding and perimeter guarding applications. Some potential applications are:

- Automated production equipment
- Robotic work cells
- Palletizers
- Assembly and packaging machines
- Lean manufacturing systems
- Automated warehouses

Examples: Inappropriate Applications

Do not use the SGS in the following applications:

- With any machine that cannot be stopped immediately after a stop signal is issued, such as single-stroke (or full-revolution) clutched machinery
- With any machine with inadequate or inconsistent machine response time and stopping performance
- With any machine that ejects materials or component parts through the defined area
- In any environment that is likely to adversely affect photoelectric sensing efficiency. For example, corrosive chemicals or fluids or unusually severe levels of smoke or dust, if not controlled, may degrade sensing efficiency
- As a tripping device to initiate or reinitiate machine motion (PSDI applications), unless the machine and its control system fully comply with the relevant standard or regulation (see OSHA 29CFR1910.217, ANSI/NFPA 79, ANSI B11.19, ISO 12100, IEC 60204-1, IEC 61496-1, or other appropriate standard)

Control Reliability: Redundancy and Self-Checking

Redundancy requires that the SGS circuit components be backed up to the extent that, if the failure of a single component will prevent effective machine stopping action when needed, that component must have a redundant counterpart which will perform the same function. The SGS is designed with redundant microprocessors.

Redundancy must be maintained whenever the SGS is in operation. Because a redundant system is no longer redundant after a component has failed, the SGS is designed to monitor itself continuously. A component failure detected by or within the self-checking system causes a stop signal to be sent to the guarded machine and puts the SGS into a Lockout condition.

A recovery from this type of Lockout condition requires:
- Replacement of the failed component (to restore redundancy)
- The appropriate reset procedure

The Diagnostic Display is used to diagnose causes of a Lockout condition. See "Error Codes" on page 45.

Operating Features

The Banner SGS Safety Grid System models described in this manual feature several functions.

Selectable Auto or Manual Start/Restart

The setting for Automatic Start/Restart (Trip Output) or Manual Start/Restart (Latch Output) determines if the SGS enters Run mode automatically or if a manual reset is required first. If the SGS is set for Automatic Start/Restart (Trip Output), other measures must be taken to prevent a pass-through hazard. For more information, see "Reducing or Eliminating Pass-Through Hazards" on page 17.

If **Automatic Start/Restart** (Trip Output) is selected, the OSSD outputs turn on after power is applied, and the receiver passes its internal self-test/ synchronization and recognizes that all beams are clear. The OSSD outputs also turn on after all beams are cleared following a blocked beam.

If **Manual Start/Restart** (Latch Output) is selected, the SGS requires a manual reset for the OSSD outputs to turn on when power is applied and all beams are clear or after a blocked beam has been cleared.

© Banner Engineering Corp. All rights reserved.

Factory Default Setting: Manual Start/Restart

WARNING:
- **Use of automatic (trip) or manual (latch) start/restart**
- Failure to follow these instructions could result in a serious injury or death.
- Applying power to the Banner Engineering Corp. device, clearing the defined area, or resetting a latch condition must not initiate dangerous machine motion. Design the machine control circuitry so that one or more initiation devices must be engaged to start the machine (a conscious act), in addition to the Banner Engineering Corp. device going into Run mode.

External Device Monitoring (EDM)

The external device monitoring (EDM) feature allows the SGS to monitor the status of external devices, such as final switch devices (FSD) and machine primary control elements (MPCE). The choices are 1-channel monitoring or no monitoring. EDM is used when the SGS OSSD outputs directly control the FSDs, MPCEs, or other external devices.

Factory default setting: 1-channel monitoring

Scan Code Configuration

The coding function allows the SGS to remain in normal operation when another SGS pair creates interference, for example when the emitter of one SGS pair radiates in the direction of the receiver of a second SGS pair. If this happens, configure the two SGS pairs to use different scan codes.

To set the scan code, use the emitter and receiver DIP switches. The available options are: No Coding, Code, 1, or Code 2. Select No Coding for the fastest response time. Use Code 1 or Code 2 to reduce cross talk between collocated curtain pairs. See "Models" on page 9 for the response times for systems with and without scan codes.

Factory default: No Coding.

Status Indicators

Status indicators on both the emitter and receiver are visible on each sensor's front panel.

Emitter	
1-Digit Diagnostic Display—indicates configuration or specific error conditions. Green Power—Indicates when power is applied. Amber Status—Indicates when the emitter is emitting light.	*Status Indicators—Emitter* 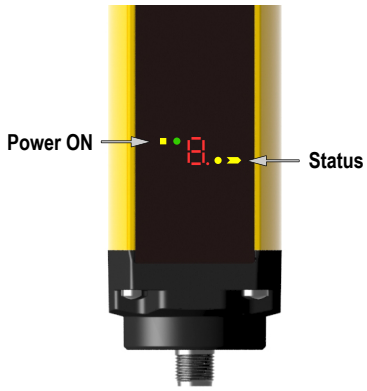

© Banner Engineering Corp. All rights reserved.

Receiver	
1-Digit Diagnostic Display—indicates configuration or specific error conditions. Green Status—Indicates when all the OSSD outputs are on. Red Status—Indicates when the OSSD outputs are off. Amber Last and Sync Beam—Indicates when the beam is not made when the system is in alignment mode. The Sync Beam light is on when all beams are clear and the system is waiting for a reset when it is configured for Manual Start/Restart. EDM Status—Indicates when EDM is being used (decimal point).	*Status Indicators—Receiver* 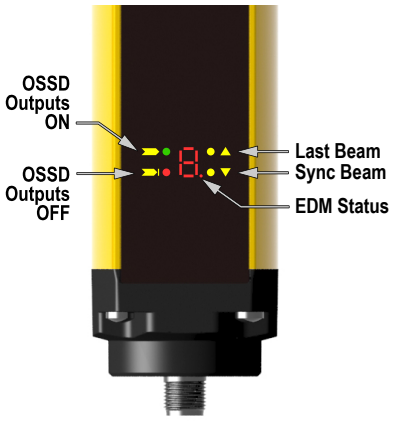

© Banner Engineering Corp. All rights reserved.

Blank page

Chapter Contents

Mechanical Installation Considerations 15
Mounting System Components 23

Chapter 4 Mechanical Installation

The SGS system performance as a safety guarding device depends on:

- The suitability of the application
- The proper mechanical and electrical installation and interfacing to the guarded machine

WARNING:

- **Read this Section Carefully Before Installing the System**
- **Failure to follow these instructions could result in serious injury or death.**
- If all mounting, installation, interfacing, and checkout procedures are not followed properly, this Banner Engineering Corp. device cannot provide the protection for which it was designed.
- The user is responsible for ensuring that all local, state, and national laws, rules, codes, or regulations relating to the installation and use of this control system in any particular application are satisfied. Ensure that all legal requirements have been met and that all technical installation and maintenance instructions contained in this manual are followed.
- The user has the sole responsibility to ensure that this Banner Engineering Corp. device is installed and interfaced to the guarded machine by Qualified Persons, in accordance with this manual and applicable safety regulations. A Qualified person is a person who, by possession of a recognized degree or certificate of professional training, or who, by extensive knowledge, training and experience, has successfully demonstrated the ability to solve problems relating to the subject matter and work.

Mechanical Installation Considerations

The two primary factors that influence the layout of the SGS system mechanical installation are the Safety Distance (Minimum Distance) (see "Safety (Minimum) Distance" on page 15) and the supplemental safeguarding/eliminating pass-through hazards (see "Reducing or Eliminating Pass-Through Hazards" on page 17). Other considerations include:

- Emitter and Receiver Orientation (see "Emitter and Receiver Orientation" on page 21)
- Adjacent Reflective Surfaces (see "Adjacent Reflective Surfaces" on page 20)
- Use of Corner Mirrors (see "Use of Corner Mirrors" on page 21)
- Installation of Multiple Systems (see "Installing Adjacent Systems" on page 22)

WARNING:

- **The hazard must be accessible only through the sensing field**
- Incorrect system installation could result in serious injury or death.
- The installation of the SGS must prevent any individual from reaching around, under, over or through the defined area and into the hazard without being detected.
- See OSHA CFR 1910.217, ANSI B11.19, and/or ISO 14119, ISO 14120 and ISO 13857 for information on determining safety distances and safe opening sizes for your guarding device. Mechanical barriers (for example, hard (fixed) guarding) or supplemental safeguarding might be required to comply with these requirements.

Safety (Minimum) Distance

Safety Distance (Ds), also called Minimum Distance (S), is the minimum distance required between the SGS sensing field and the closest reachable hazard point. The distance is calculated so that when an object or a person is detected (by blocking a sensing beam), the SGS sends a stop signal to the machine, causing it to stop by the time the object or person can reach any machine hazard point.

The distance is calculated differently for U.S. and European installations. Both methods take into account several factors, including a calculated human speed, the total system stopping time (which itself has several components), and the depth penetration factor. After the distance has been determined, record the calculated distance on the Daily Checkout Card.

© Banner Engineering Corp. All rights reserved.

WARNING:

- **Safety Distance (Minimum Distance)**
- **Failure to establish and maintain the minimum distance could result in serious injury or death.**
- Mount the Banner emitters and receivers at a distance from the nearest hazard such that an individual cannot reach the hazard before cessation of hazardous motion or situation. Calculate this distance using the formulas as described by ANSI B11.19 and ISO 13855.

Calculating Safety Distance Formula and Examples

U.S. Applications—The Safety (Separation) Distance formula for U.S. applications is:

```
Ds = K × (Ts + Tr) + Dpf
```

Ds
the Safety Distance

K
1600 mm per second (or 63 in per second), the OSHA 29CFR1910.217, and ANSI B11.19 recommended approach speed constant (see Note 1 below)

Ts
the overall stop time of the machine (in seconds) from the initial stop signal to the final ceasing of all motion, including stop times of all relevant control elements (for example, IM-T-.. Interface Modules) and measured at maximum machine velocity (see Note 3 below)

Tr
Maximum response time, in seconds, of the SGS emitter/ receiver pair (depending on model)

Dpf
Added distance due to the depth penetration factor as prescribed in OSHA 29CFR1910.217, and ANSI B11.19 for U.S. applications

Dpf is 900 mm (36 in) for reach-through applications if the top of the sensing field cannot be reached over and the bottom beam is no more than 300 mm (12 in) above the floor

Dpf is 1200 mm (48 in) for reach-over applications where the top of the sensing field is between 900 mm (36 in) and 1200 mm (48 in) above the floor and the bottom beam is no more than 300 mm (12 in) above the floor

European Applications—The Minimum Distance formula for European applications is:

```
S = (K × T) + C
```

S
the Minimum Distance, in mm, from danger zone to SGS sensing field center line

K
1600 mm per second recommended approach speed constant (see Note 2 below)

T
the overall machine stopping response time (in seconds), from the physical initiation of the safety device and the machine coming to a stop (or the hazard removed). This can be broken down into two parts: **Ts** and **Tr** where **T = Ts + Tr**

C
the additional distance, in mm, based on intrusion of a hand or object towards the danger zone prior to actuation of a safety device. Calculate using the formula (in mm):

```
C = 850
```

since the resolution is greater than 40 mm.

Notes:

1. The OSHA-recommended approach speed constant **K** has been determined by various studies and, although these studies indicate speeds of 1600 mm/sec. (63 in/sec.) to more than 2500 mm/sec. (100 in/sec.), they are not conclusive determinations. Consider all factors, including the physical ability of the operator, when determining the value of **K** to be used.
2. The recommended approach speed constant **K**, derived from data on approach speeds of the body or parts of the body as stated in ISO 13855.
3. **Ts** is usually measured by a stop-time measuring device. If the machine manufacturer's specified stop time is used, at least 20% should be added to allow for possible clutch/ brake system deterioration. This measurement must take into account the slower of the two MPCE channels, and the response time of all devices or controls that react to stop the machine.

Example Calculation

US Application example: Model SGSxP4-400xxx

K = 1600 mm/s (63 in/s)

Ts = 0.32 (0.250 seconds is specified by the machine manufacturer; plus 20% safety factor; plus 20 ms interface module IM-T-9A response)

Tr = 0.014 second (the specified SGSxP4-400xxx response time)

© Banner Engineering Corp. All rights reserved.

Dpf = 900 mm (36 in)

Ds = 1600 × (0.32 + 0.014) + 900 = 1434 mm (57 in)

Mount the SGS emitter and receiver so that no part of the sensing field is closer than 1434 mm (57 in) to the closest reachable hazard point on the guarded machine.

European Application example: Model SGSxP4-400xxx

K = 1600 mm per second

T = 0.334 (0.250 seconds is specified by the machine manufacturer; plus 20% safety factor; plus 20 ms interface module IM-T-9A response), plus 0.014 seconds (the specified SGSxP4-400xxx response time)

C = 850 mm

S = (1600 × 0.334) + 850 = 1384 mm

Mount the SGS emitter and receiver so that no part of the sensing field will be closer than 1384 mm to the closest reachable hazard point on the guarded machine.

WARNING:

- **Stop time (Ts) must include the response time of all devices or controls that react to stop the machine**
- If all devices are not included, the calculated safety distance (Ds or S) will be too short, which can lead to serious injury or death.
- Include the stop time of all relevant devices and controls in your calculations.
- If required, each of the two machine primary control elements (MPCE1 and MPCE2) must be capable of immediately stopping the dangerous machine motion, regardless of the state of the other. These two channels of machine control need not be identical, but the stop time performance of the machine (Ts, used to calculate the safety distance) must take into account the slower of the two channels.

Reducing or Eliminating Pass-Through Hazards

A *pass-through* hazard is associated with applications where personnel may pass through a safeguard, such as the SGS Safety Grid System (which issues a stop command to remove the hazard), and then continues into the guarded area. This is common in access and perimeter guarding applications. Subsequently, their presence is no longer detected, and the related danger becomes the unexpected start or restart of the machine while personnel are within the guarded area.

A pass-through hazard typically results from large safety distances calculated from long stopping times, large minimum object sensitivities, reach-over, reach-through, or other installation considerations. A pass-through hazard can be generated with as little as 75 mm (3 in) between the sensing field and the machine frame or hard (fixed) guarding.

Eliminate or reduce pass-through hazards whenever possible. While it is recommended to eliminate the pass-through hazard altogether, this may not be possible due to machine layout, machine capabilities, or other application considerations.

One solution is to ensure that personnel are continually sensed while within the hazardous area. This can be accomplished by using supplemental safeguarding, such as described by the safety requirements in ANSI B11.19 or other appropriate standards.

An alternative method is to ensure that once the safeguarding device is tripped it will latch and will require a deliberate manual action to reset. This method of safeguarding relies upon the location of the reset switch as well as safe work practices and procedures to prevent an unexpected start or restart of the guarded machine. The SGS Safety Grid System provides a configurable Manual Start/Restart (Latch Output) function for these applications.

© Banner Engineering Corp. All rights reserved.

WARNING:

- **Use of the Banner device for Access or Perimeter Guarding**
- Failure to observe this warning could result in serious injury or death.
- If a Banner device is installed in an application that results in a pass-through hazard (for example, perimeter guarding), either the Banner device or the Machine Primary Control Elements (MPCEs) of the guarded machine must cause a Latched response following an interruption of the defined area.
- The reset of this Latched condition may only be achieved by actuating a reset switch that is separate from the normal means of machine cycle initiation.

WARNING:

- **Perimeter guarding applications**
- Failure to observe this warning could result in serious injury or death.
- Use lockout/tagout procedures per ANSI Z244.1, or use additional safeguarding as described by ANSI B11.19 safety requirements or other applicable standards if a passthrough hazard cannot be eliminated or reduced to an acceptable level of risk.

Supplemental Safeguarding

As described, the SGS must be properly positioned such that an individual cannot reach through the sensing field and access the hazard point before the machine has stopped.

Additionally, the hazard cannot be accessible by reaching around, under, or over the sensing field. To accomplish this, supplemental guarding (mechanical barriers, such as screens or bars), as described by ANSI B11.19 safety requirements or other appropriate standards, must be installed. Access will then be possible only through the sensing field of the SGS System or through other safeguarding that prevents access to the hazard.

The mechanical barriers used for this purpose are typically called "hard (fixed) guarding"; there must be no gaps between the hard (fixed) guarding and the sensing field. Any openings in the hard (fixed) guarding must comply with the safe opening requirements of ANSI B11.19 or other appropriate standard.

This example shows an example of supplemental safeguarding inside a robotic work cell. The SGS, in conjunction with the hard (fixed) guarding, is the primary safeguard. Supplemental safeguarding (such as a horizontal-mounted safety light screen as an area guard) is required in areas that cannot be viewed from the reset switch (for example, behind the robot and the conveyor). Additional supplemental safeguarding may be required to prevent clearance or trapping hazards (for example, a safety mat as an area guard between the robot, the turntable, and the conveyor).

© Banner Engineering Corp. All rights reserved.

An example of supplemental safeguarding

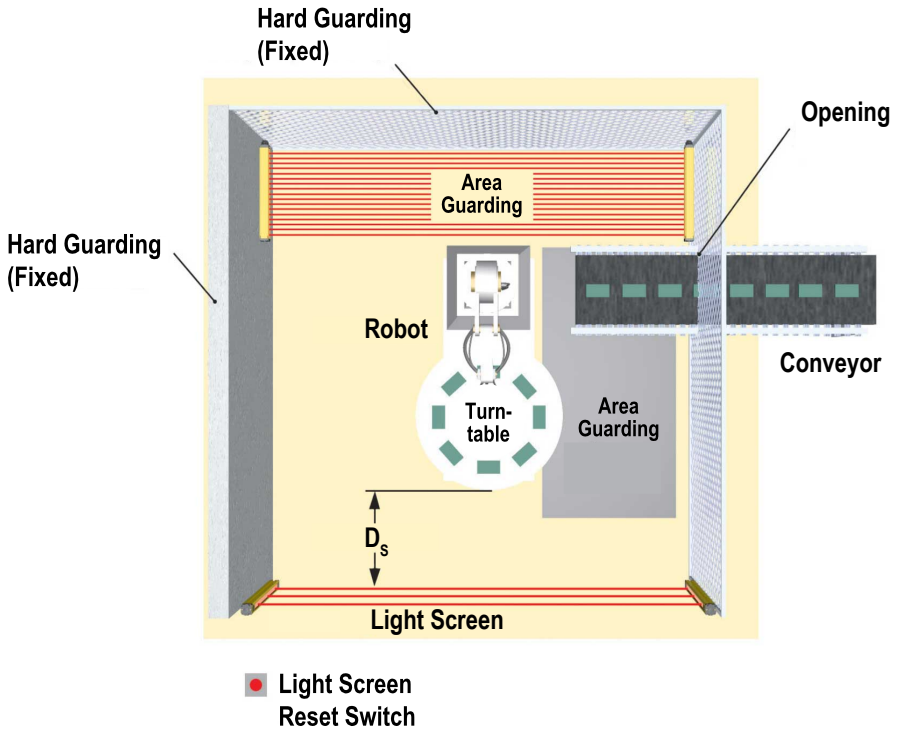

WARNING:

- **The hazard must be accessible only through the sensing field**
- Incorrect system installation could result in serious injury or death.
- The installation of the SGS must prevent any individual from reaching around, under, over or through the defined area and into the hazard without being detected.
- See OSHA CFR 1910.217, ANSI B11.19, and/or ISO 14119, ISO 14120 and ISO 13857 for information on determining safety distances and safe opening sizes for your guarding device. Mechanical barriers (for example, hard (fixed) guarding) or supplemental safeguarding might be required to comply with these requirements.

Reset Switch Location

Mount the reset switch at a location that complies with the warning and guidelines below. If any hazardous areas are not in view from the switch location, additional means of safeguarding must be provided. The switch should be protected from accidental or unintended actuation (for example, through the use of rings or guards).

A key-actuated reset switch provides some operator or supervisory control, as the key can be removed from the switch and taken into the guarded area. However, this does not prevent unauthorized or inadvertent resets due to spare keys in the possession of others, or additional personnel entering the guarded area unnoticed. When considering where to locate the reset switch, follow the guidelines below.

WARNING:

- **Install reset switches properly**
- Failure to properly install reset switches could result in serious injury or death.
- Install reset switches so that they are accessible only from outside, and in full view of, the safeguarded space. Reset switches cannot be accessible from within the safeguarded space. Protect reset switches against unauthorized or inadvertent operation (for example, through the use of rings or guards). If there are any hazardous areas that are not visible from the reset switches, provide additional safeguarding.

All reset switches must be:

© Banner Engineering Corp. All rights reserved.

- Outside the guarded area
- Located to allow the switch operator a full, unobstructed, view of the entire guarded area while the reset is performed
- Out of reach from within the guarded area
- Protected against unauthorized or inadvertent operation (such as through the use of rings or guards).

IMPORTANT: Resetting a safeguard must not initiate hazardous motion. Safe work procedures require a start-up procedure to be followed and the individual performing the reset to verify that the entire hazardous area is clear of all personnel before each reset of the safeguard is performed. If any area cannot be observed from the reset switch location, additional supplemental safeguarding must be used: at a minimum, visual and audible warnings of machine start-up.

Adjacent Reflective Surfaces

WARNING:

- **Do not install the system near reflective surfaces**
- Reflective surfaces could reflect the sensing beam(s) around an object or person within the defined area, preventing detection by the system. Failure to prevent reflection problems results in incomplete guarding and an optical short circuit that could result in serious injury or death.
- Do not locate the defined area near a reflective surface. Perform the trip test, as described in the product documentation, to detect such reflection(s).

A reflective surface located adjacent to the sensing field may deflect one or more beams around an object in the sensing field. In the worst case, an optical short circuit may occur, allowing an object to pass undetected through the sensing field.

This reflective surface may result from shiny surfaces or glossy paint on the machine, the workpiece, the work surface, the floor, or the walls. Beams deflected by reflective surfaces are discovered by performing the trip test and the periodic checkout procedures. To eliminate problem reflections:

- If possible, relocate the sensors to move the beams away from the reflective surface(s), being careful to maintain adequate separation distance
- Otherwise, if possible, paint, mask, or roughen the shiny surface to reduce its reflectivity
- Where these are not possible (as with a shiny workpiece or machine frame), determine the worst-case resolution resulting from the optical short circuit and use the corresponding depth penetration factor (Dpf or C) in the Safety Distance (Minimum Distance) formula; or mount the sensors in such a way that the receiver's field of view and/or the emitter's spread of light are restricted from the reflective surface
- Repeat the trip test (see "Conduct a Trip Test" on page 30) to verify these changes have eliminated the problem reflection(s). If the workpiece is especially reflective and comes close to the sensing field, perform the trip test with the workpiece in place

Adjacent Reflective Surfaces

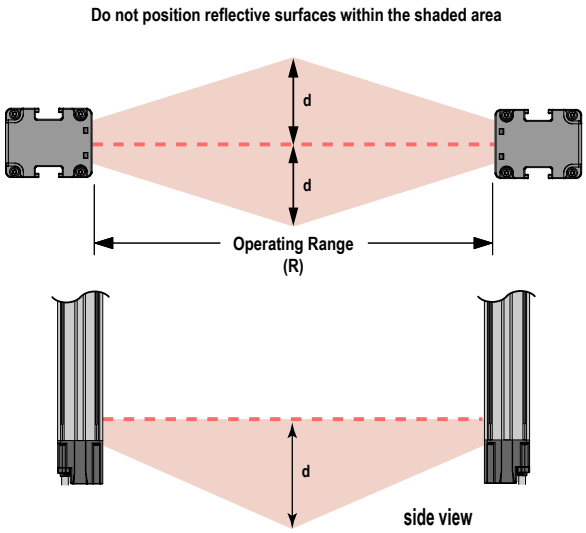

For 0.1 to 3 m (4 in to 10 ft) Operating range: d = 0.13 m (5 in)

For Operating range > 3 m (> 10 ft): d = 0.0437 x R (m or ft)

© Banner Engineering Corp. All rights reserved.

Use of Corner Mirrors

SGS may be used with one or more corner mirrors. Mirrors are not allowed for applications that would allow undetected personnel access into the safeguarded area. The use of glass-surface corner mirrors reduces the maximum specified emitter/receiver separation by approximately 8 percent per mirror, as follows:

SSM Series Glass-Surface Mirrors See the specific mirror data sheet or www.bannerengineering.com for further information. —Maximum Emitter and Receiver Separation

Number of Corner Mirrors	Maximum Emitter/Receiver Separation	
	Standard (m)	Long Range (m)
1	27.6	55.2
2	25.4	50.8
3	23.4	46.7

If mirrors are used, the difference between the angle of incidence from the emitter to the mirror and from the mirror to the receiver must be between 45° and 120° (see "Using SGS sensors in a retroreflective mode" on page 21). If placed at a sharper angle, an object in the light screen may deflect beam(s) to the receiver, preventing the object from being detected, also know as false proxing. Angles greater than 120° result in difficult alignment and possible optical short circuits.

WARNING:

- **Retroreflective Mode Installation**
- Failure to follow these instructions may create unreliable sensing and may result in serious injury or death.
- Do not install emitters and receivers in retroreflective mode with less than a 45° angle of incidence. Install emitters and receivers at an appropriate angle.

Using SGS sensors in a retroreflective mode

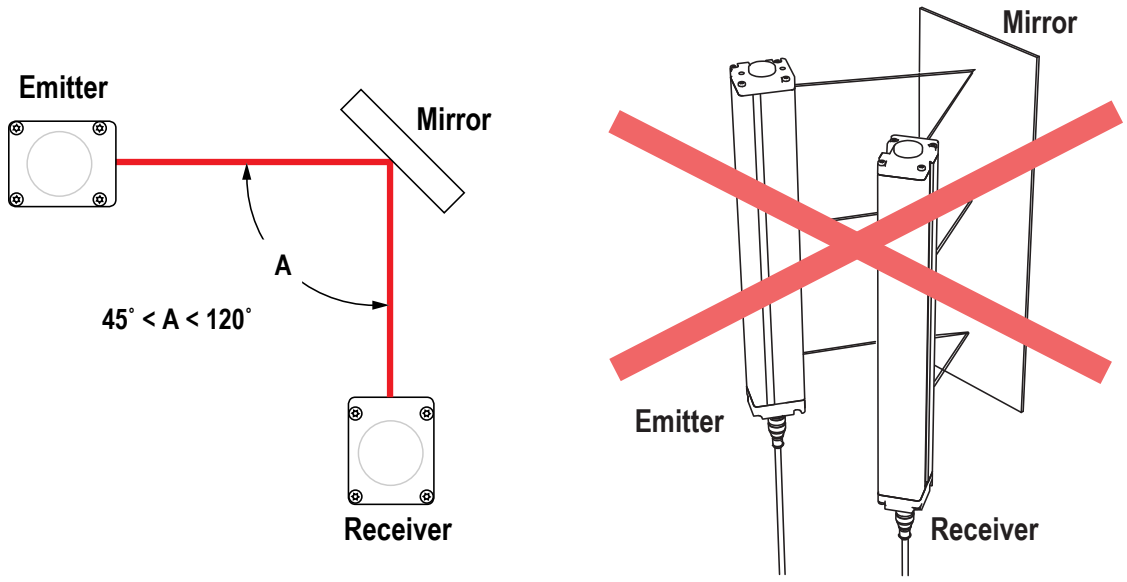

Emitter and Receiver Orientation

Mount the emitter and receiver parallel to each other and aligned in a common plane, with both machine interface cable ends pointing in the same direction. Never mount the emitter with its machine interface cable end oriented in the opposite direction of the cable end of the receiver. If this occurs, voids in the SGS sensing field may allow objects or personnel to pass through the defined area undetected. Verify the SGS Safety Grid System completely covers all access to the hazard point that is not already protected by hard (fixed) guarding or other supplemental guarding.

© Banner Engineering Corp. All rights reserved.

WARNING:

- **Properly install system components**
- Incorrectly orienting the system components impairs the performance of the system and results in incomplete guarding, which can result in serious injury or death.
- Install the system components with their corresponding cable ends pointing in the same direction.

Examples of Incorrect Emitter/Receiver Orientation

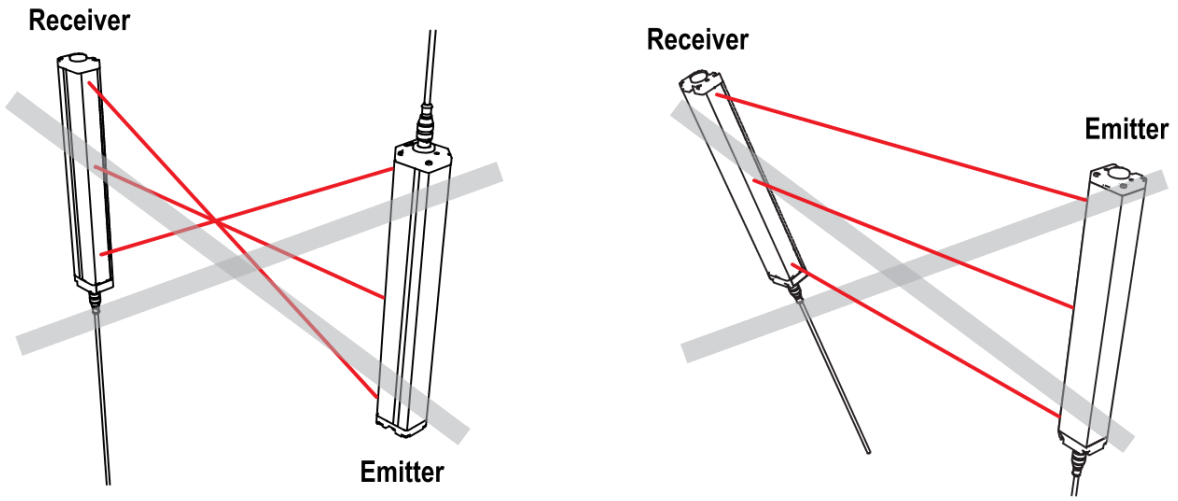

Installing Adjacent Systems

When two or more SGS emitter and receiver pairs are adjacent to one another, optical crosstalk may take place between the systems. To minimize optical crosstalk, alternate the positions of the emitters and receivers (see "Installing Multiple Systems" on page 22).

When three or more systems are installed in the same plane (as shown in "Installing Multiple Systems" on page 22), optical crosstalk may occur between sensor pairs whose emitter and receiver lenses are oriented in the same direction. In this situation, eliminate optical crosstalk by mounting these sensor pairs exactly in line with each other within one plane, or by adding a mechanical barrier between the pairs.

To further aid in avoiding crosstalk, the sensors feature two selectable scan codes. A receiver set to one scan code will not respond to an emitter set to another code. See "Scan Code Configuration" on page 12.

Installing Multiple Systems

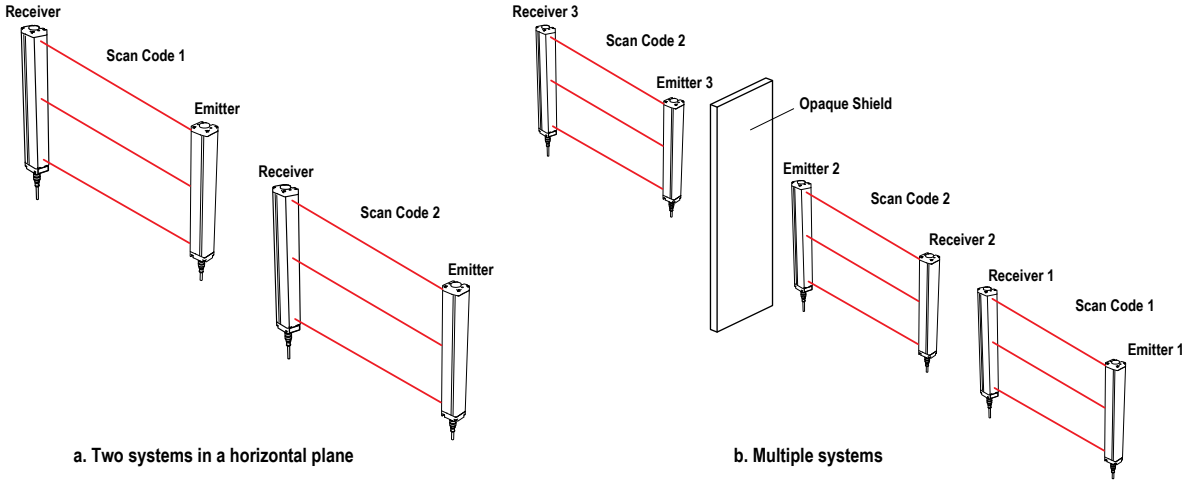

© Banner Engineering Corp. All rights reserved.

WARNING:

- **Use a scan code**
- If you do not use a scan code, a receiver can synchronize to the signal from the wrong emitter, reducing the safety function of the light curtain and creating an unsafe condition that could result in serious injury or death.
- Configure adjacent systems to use different scan codes (for example, set one system to use scan code 1 and the other system to use scan code 2). Perform a trip test to confirm the light curtain function.

Mounting System Components

Mounting Hardware

After the mechanical layout consideration of "Mechanical Installation Considerations " on page 15 are addressed, mount the sensors and route the cables. Emitter/receiver pairs can be spaced from 0.5 m to 30 m apart for standard range models and 6 m to 60 m apart for long-range models.

The end mount bracket kit is ordered separately. The end mount brackets allow 360-degree rotation.

Mounting the End-Mount Brackets

End-Mount Brackets



- See "Sensor Mounting and Mechanical Alignment" on page 24 for additional mounting recommendations.
- The machine interface connector ends of both sensors must point in the same direction.
- Four brackets are supplied with each SGSA-MBK-10-4 kit ordered.

1. Mount the bottom brackets to the desired surfaces using user-supplied hardware.
2. Place the sensors into the bottom bracket and temporarily tighten enough to secure the sensors but allow for adjustment.
3. Verify that the sensor windows directly face each other by rotating the sensor(s), then tighten the nut on the bottom bracket.
4. Measure from a reference plane, for example, a level building floor, to the same point(s) on the sensors to verify their mechanical alignment. Use a carpenter's level, a plumb bob, or the optional LAT-1-SGS Laser Alignment Tool (see "Alignment Aids" on page 58) or check the diagonal distances between the sensors, to achieve mechanical alignment. See "Sensor Mounting and Mechanical Alignment" on page 24.
5. Place the top brackets on the top of the sensors, attach to the mounting surface using user-supplied hardware, and temporary tighten the nut on the bracket to secure the sensors in place but allow for adjustment. Final alignment procedures are explained in "Initial Checkout Procedure" on page 26.

© Banner Engineering Corp. All rights reserved.

Sensor Mounting and Mechanical Alignment

Verify that:

- The emitter and receiver are directly opposite each other
- Nothing is interrupting the defined area
- The defined area is the same distance from a common reference plane for each sensor
- The emitter and receiver are in the same plane and are level/plumb and square to each other (vertical or inclined at the same angle, not tilted front-to-back or side-to-side)

Incorrect Sensor Alignment

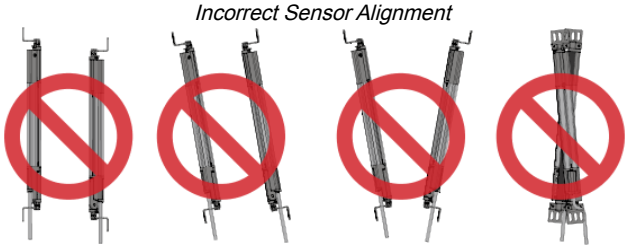

Vertical Installations – verify that:

- Distance X at the emitter and receiver are equal
- Both sensors are level/plumb (check both the side and face)
- Defined area is square. Check diagonal measurements if possible (Diagonal A = Diagonal B).

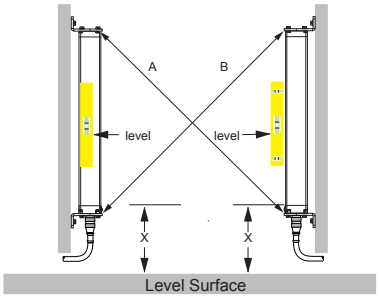

Mounting Dimensions

All measurements are listed in millimeters [inches], unless noted otherwise. See "Specifications" on page 51 for the SGS dimensions with and without brackets installed.

End-Mount Bracket	Dimensions
SGSA-MBK-10-4 • 8-gauge, zinc-plated cold rolled steel	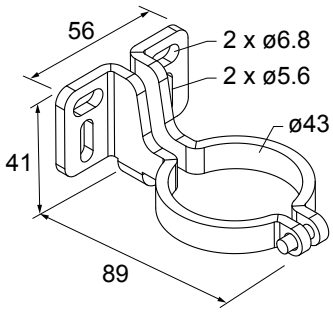

© Banner Engineering Corp. All rights reserved.

Chapter Contents

Routing Cordsets 25
Initial Electrical Connections 26
Initial Checkout Procedure 26
Electrical Connections to the Guarded Machine 31
Wiring Diagrams 35

Chapter 5 Electrical Installation and Testing

WARNING:
Read this Section Carefully Before Installing the System— If all mounting, installation, interfacing, and checkout procedures are not followed properly, the Banner device cannot provide the protection for which it was designed. The user is responsible for ensuring that all local, state, and national laws, rules, codes, or regulations relating to the installation and use of this control system in any particular application are satisfied. Ensure that all legal requirements have been met and that all technical installation and maintenance instructions contained in this manual are followed.

The user has the sole responsibility to ensure that this Banner device is installed and interfaced to the guarded machine by Qualified Persons[1], in accordance with this manual and applicable safety regulations. **Failure to follow these instructions could result in serious injury or death.**

WARNING:
- **Properly connect multiple pairs of sensors**
- Connecting multiple output signal switching devices (OSSD) safety outputs to one interface module or otherwise parallel OSSD outputs can result in serious bodily injury or death, and is prohibited.
- Do not connect multiple pairs of sensors to a single device.

The following are the main steps to electrically install the SGS components and interface with the guarded machine:

1. Connect the routing cordsets and make the initial electrical connections (see "Routing Cordsets" on page 25 and "Initial Electrical Connections" on page 26).
2. Apply power to each emitter/receiver pair (see "Apply (Initial) Power to the System" on page 27).
3. Perform an Initial Checkout Procedure (see "Initial Checkout Procedure" on page 26).
4. Make all electrical interface connections to the guarded machine (see "Electrical Connections to the Guarded Machine" on page 31).
5. Perform a commissioning checkout procedure (see "Perform a Commissioning Checkout" on page 49).

Routing Cordsets

Attach the required cordsets to the sensors and route the sensor cables to the junction box, electrical panel, or other enclosure in which the interface module, the redundant mechanically linked interposing relays, FSDs, or other safety-related parts of the control system are located. This must be done per local wiring code for low-voltage dc control cables and may require installation of electrical conduit. See "Accessories" on page 55 for selection of Banner supplied cables.

SGS is designed and manufactured to be highly resistant to electrical noise and to operate reliably in industrial settings. However, extreme electrical noise may cause a random Trip condition; in extreme cases, a Lockout is possible.

Emitter and receiver wiring is low voltage; routing the sensor wires alongside power wires, motor/servo wires, or other high voltage wiring may inject noise into the SGS System. It is good wiring practice, and sometimes may be required by code, to isolate emitter and receiver cables from high-voltage wires, avoid routing cables close to “noisy” wiring, and provide a good connection to earth ground.

Sensor cabling and any interconnect wiring should have an insulation temperature rating of at least 90 °C (194 °F). The maximum machine interface cable length is 70 m.

[1] A person who, by possession of a recognized degree or certificate of professional training, or who, by extensive knowledge, training and experience, has successfully demonstrated the ability to solve problems relating to the subject matter and work.

© Banner Engineering Corp. All rights reserved.

Initial Electrical Connections

WARNING:

- **Risk of electric shock**
- Use extreme caution to avoid electrical shock. Serious injury or death could result.
- Always disconnect power from the safety system (for example, device, module, interfacing, etc.), guarded machine, and/or the machine being controlled before making any connections or replacing any component. Lockout/tagout procedures might be required. Refer to OSHA 29CFR1910.147, ANSI Z244-1, or the applicable standard for controlling hazardous energy.
- Make no more connections to the device or system than are described in this manual. Electrical installation and wiring must be made by a Qualified Person[1] and must comply with the applicable electrical standards and wiring codes, such as the NEC (National Electrical Code), NFPA 79, or IEC 60204-1, and all applicable local standards and codes.

Lockout/tagout procedures may be required (refer to OSHA1910.147, ANSI Z244-1, ISO 14118, or the appropriate standard for controlling hazardous energy). Follow relevant electrical standards and wiring codes, such as the NEC, NFPA79 or IEC60204-1. A functional earth is available on the green wire of the M12 connector. This ground can be connected or left open (floating) to achieve the best electromagnetic compliance for a specified application.

Make the electrical connections in the order described in this section. Do not remove end-caps; no internal connections are to be made. All connections are made through the QD connections.

Emitter Cordset

SGS emitters have an 8-pin cordset, but not all conductors are used. The other wires are in place to allow a parallel connection (color-for-color) to a standard (non-muting) receiver cable, providing sensor interchangeability (or “swapability”); either sensor may be installed at either cordset connection. In addition to providing similar cabling, this wiring scheme is advantageous during installation, wiring, and troubleshooting.

Receiver Cordset—8-pin

Connect the OSSD outputs to the IM module or other control relays, if used, but make sure power is not available to the guarded machine. For the initial power-up and checkout, External Device Monitoring (EDM) must be configured/wired (see "External Device Monitoring (EDM)" on page 33), the Scan Code must be selected (see "Select the Scan Code" on page 34), and the reset line must be connected to +24 V dc via a NC switch. Take precautions to prevent unused wires from shorting to ground or to other sources of energy (for example, terminate with a wire-nut). Final OSSD wiring must be completed later.

Initial Checkout Procedure

The initial checkout procedure must be performed by a Qualified Person. It must be performed only after configuring the System and after connecting the components.

Perform this procedure to:

- Ensure proper installation when the System is first installed
- Ensure proper System function whenever any maintenance or modification is performed on the System or on the machinery that is guarded by the System.

Configuring the System for Initial Checkout

For the initial checkout, the SGS System must be checked without power available to the guarded machine. Final interface connections to the guarded machine cannot take place until the light screen system has been checked out. This may require lockout/tagout procedures (refer to OSHA1910.147, ANSI Z244-1, ISO 14118, or the appropriate standard for controlling hazardous energy). The OSSD connections will be made after the initial checkout procedure has been successfully completed.

Verify that:

- The reset line (violet wire) is connected via a NC switch to +24 V dc (or directly connected)
- Power has been removed from (or is not available to) the guarded machine and its controls or actuators
- EDM is configured and wired per application requirements (1-channel or no monitoring, see "External Device Monitoring (EDM)" on page 33)
- If no EDM is configured, do not connect the OSSD lines to the machine control circuit. If 1-channel EDM is configured, wire the OSSD to relays but power must not be available to the guarded machine (permanent connections will be made later).

[1] A person who, by possession of a recognized degree or certificate of professional training, or who, by extensive knowledge, training and experience, has successfully demonstrated the ability to solve problems relating to the subject matter and work.

© Banner Engineering Corp. All rights reserved.

Apply (Initial) Power to the System

1. Inspect the area near the light screen for reflective surfaces, including work pieces and the guarded machine. Reflective surfaces may cause light beams to reflect around a person in the light screen, preventing the person from being detected and not stopping the machine motion (see "Adjacent Reflective Surfaces" on page 20).
2. Eliminate the reflective surfaces as much as possible by relocating, painting, masking, or roughening them. Remaining problem reflections will become apparent during the trip test.
3. **Verify that power is removed** from the SGS Safety Grid System System and from the guarded machine.
4. Remove all obstructions from the light screen.
5. With the power to the guarded machine off, make external device monitoring (EDM), power, and earth ground connections on both the emitter and receiver cables (see "Wiring Diagrams" on page 35).

   The +24 V DC (brown wire) and 0 V DC (blue wire) should be connected to a SELV-rated supply and ground (green wire) to earth ground. See "Specifications" on page 51 for power supply requirements. If the installation does not allow direct connection to earth ground via the cordset, the earth ground must be provided via the mounting brackets. Connect the reset line (violet wire) via a NC switch to +24 V DC. If 1-channel EDM is configured, wire the OSSDs to the controlling relays.
6. Power up the SGS Safety Grid System only.
7. Verify the input power is present to both the emitter and the receiver.

   At least one indicator on both the emitter and the receiver should be On and the start-up sequence should cycle.
8. Watch both the emitter and the receiver Status indicators and the receiver Alignment indicators to determine the light screen alignment status. See "Error Codes" on page 45.
9. Optically align the SGS Safety Grid System components.

Optically Align the Components

WARNING:
- **Hazard exposure**
- Failure to follow these instructions could result in serious injury or death.
- Verify that no individuals are exposed to any hazard if the output signal switching device (OSSD) outputs turn on when the emitter and receiver become aligned.

Verify the optimal alignment, adjusting the sensor rotation with the power on. (It is easiest to align in trip mode.) At power-up, all indicators are tested (cycle), then the Scan Code is displayed.

1. Before applying power, verify the emitter and the receiver are pointed squarely at each other. Use a straight edge (for example, a level) to determine the direction the sensor is facing. The sensor face must be perpendicular to the optical axis.

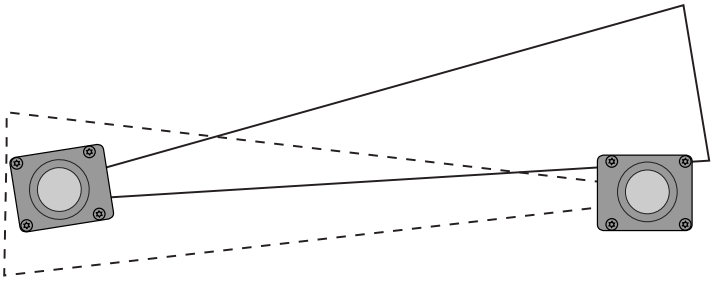

2. Enter Alignment mode by holding the NC Reset Switch open during the power-on sequence for at least 0.5 s past the power being applied.

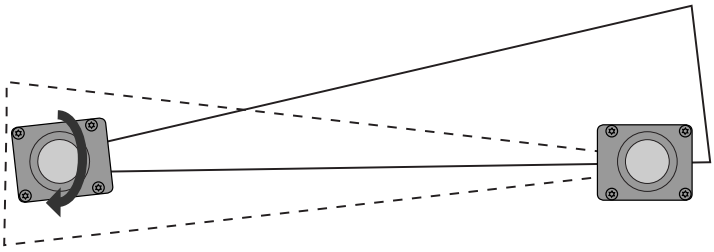

   If the Sync beam is not aligned, the Sync and Last Beam lights are on, the green status light is off, the red status light is on, and the 7-segment display shows an A.

© Banner Engineering Corp. All rights reserved.

3. On the receiver: If the green Status light is on, the red status light is off, and a 4 shows on the display, go to the next step. If not, rotate each sensor (one at a time) left and right until the green Status indicator is on and the highest number shows on the display.

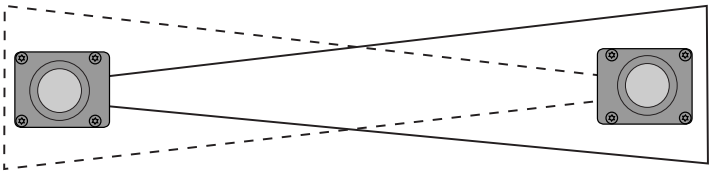

The better the alignment, the faster the amber light in the end cap flashes. (As the sensor rotates out of alignment, the red Status indicator turns on).

4. To optimize alignment and maximize excess gain, slightly loosen the sensor mounting screws and rotate one sensor left and right, noting the positions in each arc where the Status indicators turn red (blocked condition); repeat with the other sensor. Center each sensor between those two positions and tighten the mounting screws, making sure to maintain the positioning as the screws are tightened.

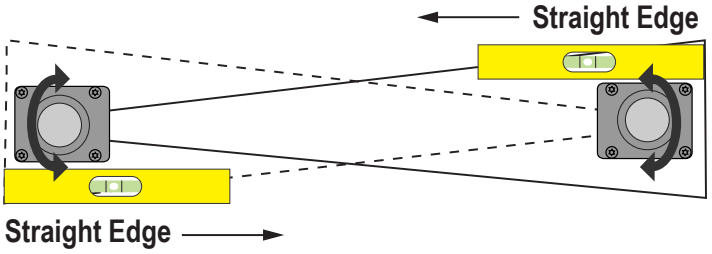

For situations where alignment is difficult, use an LAT-1-SGS Laser Alignment Tool to assist or confirm alignment by providing a visible red dot along the sensor's optical axis.

5. After alignment is complete, cycle power to return to normal operation.

Alignment Procedure Display Codes

Display	Alignment state	Alignment quality	OSSD state out of alignment-function
	no sync; check 1st beam	bad	OFF
	last beam isn't aligned	bad	OFF
	one or more intermediate beam is not aligned	bad	OFF
		marginal	ON
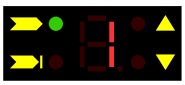	every beam over the lower threshold and up to 25% of beams over the upper threshold	good	ON
	every beam over the lower threshold and up to 50 % of beam over the upper threshold	better	ON
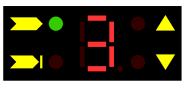	every beam over the lower threshold and up to 75% of beam over the upper threshold	very good	ON
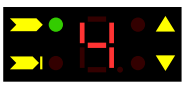	every beam over the lower threshold and up to 100% of beam over the upper threshold	excellent	ON

© Banner Engineering Corp. All rights reserved.

The alignment level is monitored also during device normal operating mode, and is displayed using a bar graph shown on the user interface. After the curtain has been aligned and correctly fastened, use the display signal to check the alignment and view any change in the environmental conditions (presence of dust, light disturbance and so on). The behavior is demonstrated in the next table.

Visualization	Alignment state	Alignment quality
	every beam over the lower threshold and up to 25% of beams over the upper threshold	Minimum
	every beam over the lower threshold and up to 50 % of beam over the upper threshold	Medium
	every beam over the lower threshold and up to 75% of beam over the upper threshold	Good
	every beam over the lower threshold and up to 100% of beam over the upper threshold	Excellent

Optically Align the Components with Corner Mirrors

SGS sensors may be used with one or more corner mirrors for guarding more than one side of an area. The SSM-... rear-surface glass mirrors are rated at 85% efficiency. Thus, excess gain and sensing range are reduced when using mirrors; see "Use of Corner Mirrors" on page 21.

During any adjustments, allow only one individual to adjust any one item at any one time.

In addition to the standard optical alignment procedure, verify:

1. The emitter, receiver, and all mirrors are level and plumb.
2. The middle of the defined area and the center point of the mirrors are approximately the same distance from a common reference point, such as the same height above a level floor.
3. There are equal amounts of mirror surface above and below the defined area such that the optical beams are not passing below or above the mirror.

> **NOTE:** A LAT-1-SGS Laser Alignment Tool is very helpful by providing a visible red dot along the optical axis. See "Optical alignment using the LAT-1-SGS" on page 29 and Banner Safety Applications Note SA104 (p/n 57477) for more information.

Optical alignment using the LAT-1-SGS

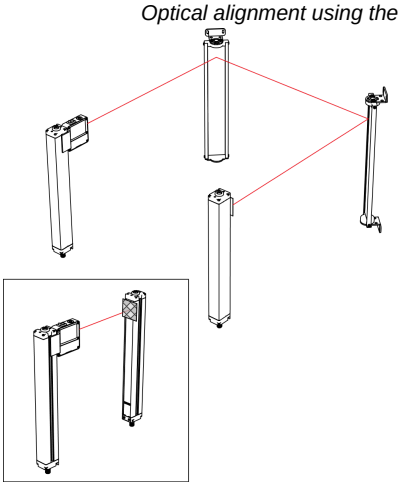

Corner Mirror Alignment

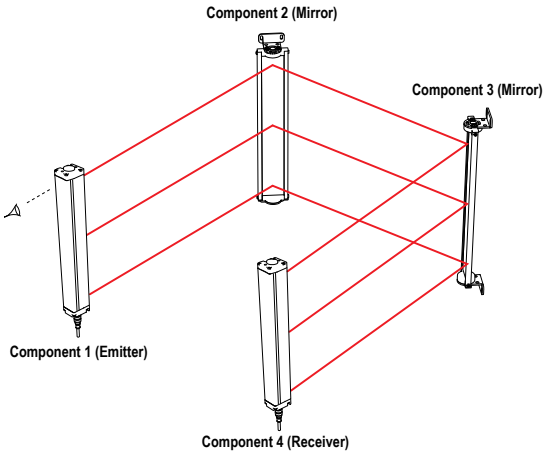

© Banner Engineering Corp. All rights reserved.

Conduct a Trip Test

After optimizing the optical alignment, perform the trip test to verify the detection capability of the SGS system.

To conduct the trip test, use a 60 mm or larger diameter test piece (not supplied).

This test also verifies correct sensor orientation and identifies optical short circuits. After the installation has passed the trip test, connect the safety outputs and perform the commissioning checkout (for initial installations only).

1. Verify the system is in Run mode and the green Status indicator is on.
2. Pass the test piece through each beam in three paths: near the emitter, near the receiver, and midway between the emitter and receiver.

Trip Test

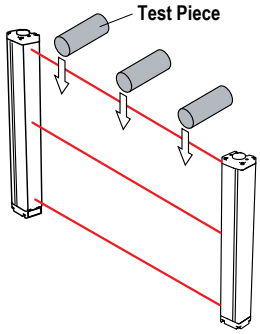

During each pass, while the test piece is interrupting each beam, the red Status indicator turns on and the green indicator turns off. If this does not happen, the installation has failed the trip test.

3. If the installation fails the trip test, check for correct sensor orientation and reflective surfaces.

   When the test piece is removed from the sensing field, if configured for Automatic Start/Restart operation, the green Status indicator must turn on and the red indicator turn off.

WARNING:
- **Trip test failure**
- Using a system that has failed a trip test can result in serious bodily injury or death. If the trip test has failed, the system might not stop dangerous machine motion when a person or object enters the sensing field.
- Do not attempt to use the system if the system does not respond properly to the trip test.

4. If mirrors are used in the application, test the sensing field on each leg of the sensing path (for example, emitter to mirror, between mirror and receiver.

Trip Test with Corner Mirror

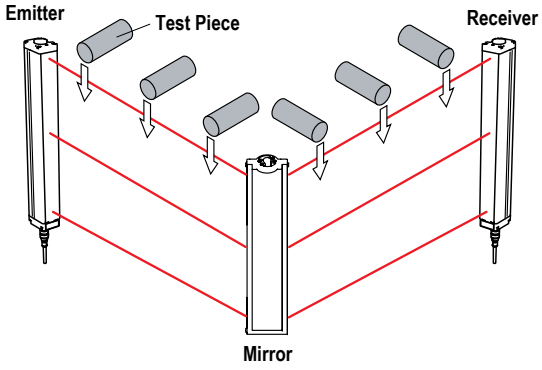

5. If the SGS System passes all checks during the trip test, make the electrical connections to the guarded machine.

© Banner Engineering Corp. All rights reserved.

Electrical Connections to the Guarded Machine

Verify that power has been removed from the SGS and the guarded machine. Make the permanent electrical connections as described in "OSSD Output Connections" on page 31 and "Final Switching Devices (FSD) Interfacing Connections" on page 32 as required by each individual application.

Lockout/tagout procedures may be required (refer to OSHA 1910.147, ANSI Z244-1, ISO 14118, or the appropriate standard for controlling hazardous energy). Follow relevant electrical standards and wiring codes, such as the NEC, NFPA79 or IEC 60204-1.

Supply power and external device monitoring (EDM) should already be connected. The SGS must also have been aligned and passed the Initial Checkout, as described in "Initial Checkout Procedure" on page 26.

The final connections to be made or verified are:

- OSSD outputs
- FSD interfacing
- MPCE/EDM

WARNING:

- **Risk of electric shock**
- Use extreme caution to avoid electrical shock. Serious injury or death could result.
- Always disconnect power from the safety system (for example, device, module, interfacing, etc.), guarded machine, and/or the machine being controlled before making any connections or replacing any component. Lockout/tagout procedures might be required. Refer to OSHA 29CFR1910.147, ANSI Z244-1, or the applicable standard for controlling hazardous energy.
- Make no more connections to the device or system than are described in this manual. Electrical installation and wiring must be made by a Qualified Person[1] and must comply with the applicable electrical standards and wiring codes, such as the NEC (National Electrical Code), NFPA 79, or IEC 60204-1, and all applicable local standards and codes.

OSSD Output Connections

Refer to the output specifications in the electrical specifications (see "Specifications" on page 51) and the warning below before making OSSD output connections and interfacing the SGS to the machine.

WARNING:

- **Interfacing both output signal switching devices (OSSD)**
- Failure to follow these instructions could result in serious injury or death.
- Unless the same degree of safety is maintained, never wire an intermediate device(s) (PLC, PES, PC) between the safety module outputs and the master stop control element it switches such that a failure causes a loss of the safety stop command or the failure allows the safety function to be suspended, overridden, or defeated.
- Connect both OSSD outputs to the machine control so that the machine's safety-related control system interrupts the circuit to the machine primary control element(s), resulting in a non-hazardous condition.

WARNING:

- **Output Signal Switching Device (OSSD) Interfacing**
- **Failure to properly interface the OSSD outputs to the guarded machine could result in serious injury or death.**
- To ensure proper operation, the Banner device output parameters and machine input parameters must be considered when interfacing the Banner device OSSD outputs to machine inputs. Machine control circuitry must be designed so that the maximum load resistance value is not exceeded and that the maximum specified OSSD off-state voltage does not result in an On condition.

[1] A person who, by possession of a recognized degree or certificate of professional training, or who, by extensive knowledge, training and experience, has successfully demonstrated the ability to solve problems relating to the subject matter and work.

© Banner Engineering Corp. All rights reserved.

Final Switching Devices (FSD) Interfacing Connections

Final switching devices (FSDs) take many forms. The most common are forced-guided devices, mechanically linked relays, or interface modules. The mechanical linkage between the contacts allows the device to be monitored by the external device monitoring (EDM) circuit for certain failures.

Depending on the application, the use of FSDs can facilitate controlling voltage and current that differs from the OSSD outputs of the SGS. FSDs can also be used to control an additional number of hazards by creating multiple safety stop circuits.

Protective Stop (Safety Stop) Circuits

A protective stop (safety stop) allows for an orderly cessation of motion for safeguarding purposes, which results in a stop of motion and removal of power from the MPCEs (assuming this does not create additional hazards).

A protective stop circuit typically comprises a minimum of two normally open contacts from forced-guided, mechanically linked relays, which are monitored through External Device Monitoring (EDM) to detect certain failures to prevent the loss of the safety function. Such a circuit can be described as a "safe switching point". Typically, protective stop circuits are either single-channel, which is a series connection of at least two normally open contacts; or dual-channel, which is a separate connection of two normally open contacts. In either method, the safety function relies on the use of redundant contacts to control a single hazard. If one contact fails On, the second contact arrests the hazards and prevents the next cycle from occurring. See "Generic Wiring for a Receiver and Redundant FSD" on page 37.

The interfacing of the protective stop circuits must be accomplished so that the safety function cannot be suspended, overridden, or defeated unless accomplished in a manner of the same or greater degree of safety as the machine's safety-related control system that includes the SGS.

The normally open safety outputs from an interface module provide a series connection of redundant contacts that form protective stop circuits for use in either single-channel or dual-channel control. See "Generic Wiring for a Receiver and Redundant FSD" on page 37.

Dual-Channel Control

Dual-channel control provides the ability to electrically extend the safe switching point beyond the FSD contacts.

With proper monitoring, this method of interfacing is capable of detecting certain failures in the control wiring between the safety stop circuit and the MPCEs. These failures include a short-circuit of one channel to a secondary source of energy or voltage, or a loss of the switching ability of one of the FSD outputs. Such failures may lead to a loss of redundancy, or to a complete loss of safety, if not detected and corrected.

The possibility of a failure to the wiring increases as the physical distance between the FSD safety stop circuits and the MPCEs increases, as the length or the routing of the interconnecting wires increases, or if the FSD safety stop circuits and the MPCEs are located in different enclosures. For this reason, dual-channel control with EDM monitoring should be used in any installation where the FSDs are located remotely from the MPCEs.

Single-Channel Control

Single-channel control uses a series connection of FSD contacts to form a safe switching point.

After this point in the machine's safety-related control system, failures can occur that would result in a loss of the safety function (such as a short-circuit to a secondary source of energy or voltage). For this reason, single-channel control interfacing should be used only in installations where FSD safety stop circuits and the MPCEs are mounted within the same control panel, adjacent to each other, and are directly connected to each other; or where the possibility of such a failure can be excluded. If this cannot be achieved, then dual-channel control should be used.

Methods to exclude the possibility of these failures include, but are not limited to:

- Physically separating interconnecting control wires from each other and from secondary sources of power
- Routing interconnecting control wires in separate conduit, runs, or channels
- Locating all elements (modules, switches, and devices under control) within one control panel, adjacent to each other, and directly connected with short wires
- Properly installing multi-conductor cabling and multiple wires through strain relief fittings. Over-tightening of a strain-relief device can cause short circuits at that point.
- Using positive-opening or direct-drive components, installed and mounted in a positive mode

Machine Primary Control Elements and EDM Input

A machine primary control element (MPCE) is an electrically powered element that directly controls the normal operation of a machine in such a way that it is the last element (in time) to function when machine operation is to be initiated or arrested (per IEC 61496-1). Examples include motor contactors, clutch/brakes, valves, and solenoids.

© Banner Engineering Corp. All rights reserved.

Depending on the level of risk of harm, it may be required to provide redundant MPCEs or other control devices that are capable of immediately stopping the dangerous machine motion, irrespective of the state of the other. These two machine control channels need not be identical (diverse redundant), but the stop time performance of the machine (Ts, used to calculate the safety distance, see "Safety (Minimum) Distance" on page 15) must take into account the slower of the two channels. Consult the machine manufacturer for additional information.

To ensure that an accumulation of failures does not compromise the redundant control scheme (cause a failure to danger), a method to verify the normal functioning of MPCEs or other control devices is required. The SGS system provides a convenient method for this verification: external device monitoring (EDM).

For the SGS external device monitoring to function properly, each device must include a normally closed, forced-guided (mechanically linked) contact that can accurately reflect the status of the device. This ensures that the normally open contacts, used for controlling hazardous motion, have a positive relationship with the normally closed monitoring contacts and can detect a failure to danger (for example, contacts that are welded closed or stuck On).

It is strongly recommended that a normally closed, forced-guided monitoring contact of each FSD and MPCE be connected in series with the EDM input (see "Generic Wiring for a Receiver and IM-T-9A Interface Module" on page 38). If this is done, proper operation will be verified. Monitoring FSD and MPCE contacts is one method of maintaining control reliability (OSHA/ANSI) and Category 3 and 4 (ISO 13849-1).

If monitoring contacts are not available or do not meet the design requirement of being forced-guided (mechanically linked), it is recommended you:

- Replace the devices so that they are capable of being monitored; or
- Incorporate the EDM function into the circuit as close to the MPCE as possible (for example, monitor the FSDs); and
- Employ the use of well-tried, tested, and robust components, and generally accepted safety principles, including fault exclusion, into the design and installation to either eliminate, or reduce to an acceptable (minimal) level of risk, the possibility of undetected faults or failures that can result in the loss of the safety function.

The principle of fault exclusion allows the designer to design out the possibility of various failures and justify it through the risk assessment process to meet the required level of safety performance, such as the requirements of Category 2, 3, or 4. See ISO 13849-1/-2 for further information.

WARNING:

- **External Device Monitoring (EDM)**
- Creating a hazardous situation could result in serious injury or death.
- If the system is configured for “no monitoring,” it is the user’s responsibility to ensure this does not create a hazardous situation.

External Device Monitoring (EDM)

SGS provides two possible EDM configurations: 1-channel monitoring and no monitoring. Their functions are described below. The most common form of EDM is 1-channel monitoring; its primary advantage is the simplicity of wiring. The installation must prevent short circuits across the normally closed (N.C.) monitoring contacts and to secondary sources of power.

One-channel EDM status, with respect to safety output

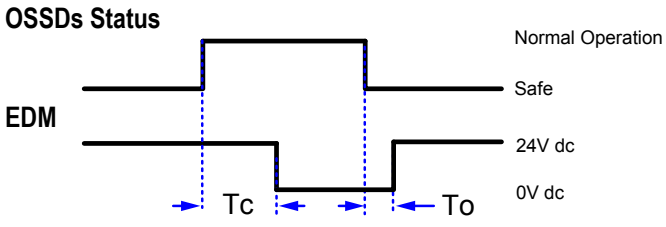

External Device Monitoring Wiring

If not connected previously, it is again strongly recommended that one normally closed, forced-guided monitoring contact of each FSD and MPCE be wired as shown in the monitoring circuit (see "Generic Wiring for a Receiver and IM-T-9A Interface Module" on page 38). The orange wire of the receiver connector provides connection for the external device monitoring input.

External device monitoring (EDM) must be wired in one of two configurations described below.

© Banner Engineering Corp. All rights reserved.

One-Channel Monitoring: This is a series connection of normally closed monitor contacts that are force-guided (mechanically linked) from each device controlled by the SGS. The monitor contacts must be closed before the SGS OSSDs can turn on. After the safety outputs (OSSDs) turn on, the monitor contacts must open in 350 ms. However, the monitor contacts must be closed within 100 ms of the OSSD outputs going from on to off.

Refer to "Generic Wiring for a Receiver and IM-T-9A Interface Module" on page 38 for wiring. Connect the monitor contacts between +24 V dc and EDM (orange wire).

No Monitoring: Use this configuration to perform the initial checkout; see "Initial Checkout Procedure" on page 26. *If the application does not require the EDM function, it is the user's responsibility to ensure that this configuration does not create a hazardous situation.*

To configure the SGS Safety Grid System for no monitoring, see "System Configuration Settings" on page 39.

WARNING:

- **Retrofit of 2-channel EDM Installations. If there are any questions concerning retrofit installations, contact Banner Engineering.**
- If the required wiring changes are not made, the device connected to pin 2 (Orn/Blk) will not be monitored and could result in undetected faults and create an unsafe condition, which could result in serious bodily injury or death.
- In existing installations using 2-channel external device monitoring (default setting of EZ-SCREEN), the parallel wiring of the N.C. monitoring contacts must be rewired for the series connection used for 1-channel EDM.

Select the Scan Code

Configure the emitter and receiver to use uncoded or one of two Scan Codes (1 or 2). Both the emitter and its corresponding receiver must have the same setting; a receiver recognizes light only from an emitter with the same scan code. The scan code is configured using switches and is recognized at power-up and remains set until the input is changed and power is cycled.

To set the scan code, use the emitter and receiver DIP switches. The available options are: No Coding, Code, 1, or Code 2. Selecting No Coding provides the fastest response time, but immunity to adjacent systems and other sources of noise may decrease. For the most reliable operation, use Code 1 or Code 2 to reduce cross talk between collocated curtain pairs.

See "System Configuration Settings" on page 39 for the DIP switch settings.

Preparing for System Operation

After the initial trip test has been accomplished, and the OSSD safety outputs and EDM connections have been made to the machine to be controlled, the SGS is ready for testing in combination with the guarded machine.

The operation of the SGS with the guarded machine must be verified before the combined System and machine may be put into service. To do this, a Qualified Person must perform the Commissioning Checkout Procedure (see "Perform a Commissioning Checkout" on page 49).

Sensor Interchangeability

The figures below illustrate a wiring option that provides sensor interchangeability (or swapability)—the ability to install either sensor at either QD connection. The resulting installation provides the ability to swap the emitter and receiver position. This wiring option provides advantages during installation, wiring, and troubleshooting.

To use this option, connect all emitter wires in parallel (color-for-color) to the receiver cable via individual wires or the CSB.. splitter cordset.

Model CSB.. splitter cordsets and DEE2R.. double-ended cordsets allow easy interconnection between an SGS receiver and emitter, providing a single homerun cordset.

© Banner Engineering Corp. All rights reserved.

Individual cordsets (left) and Splitter cordsets (right)

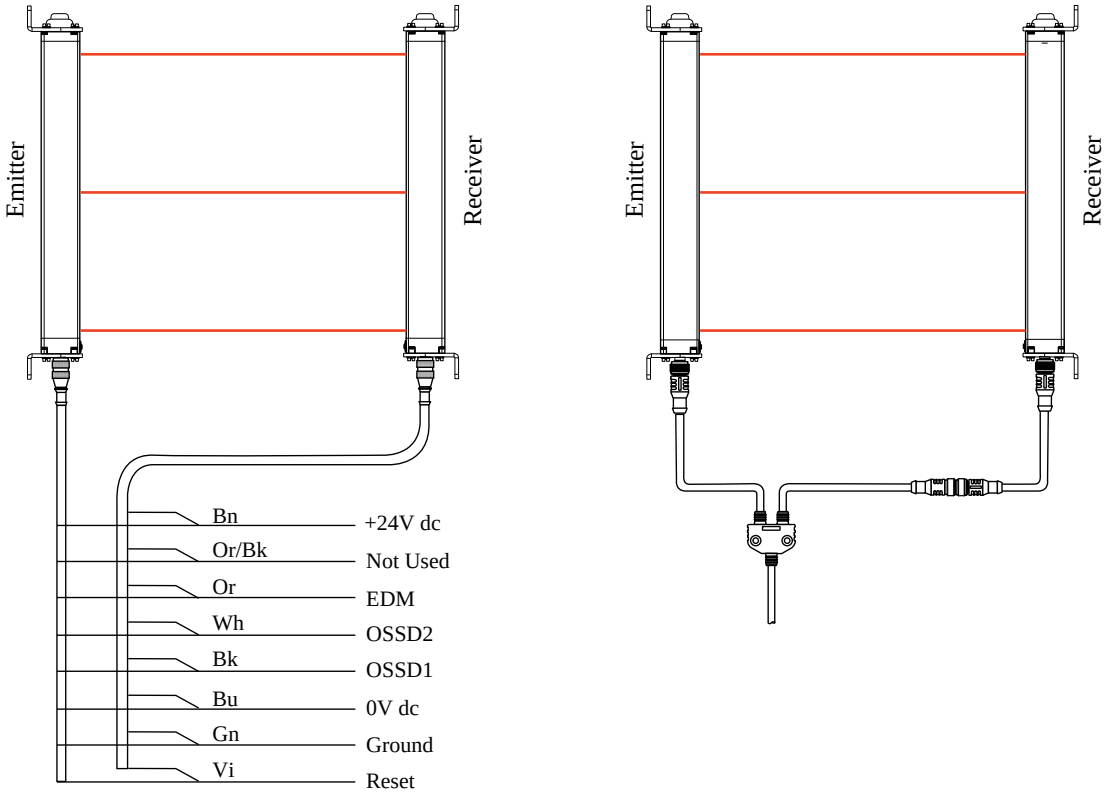

Wiring Diagrams

Reference Wiring Diagrams

Other interfacing modules and solutions are available, see "Accessories" on page 55 and www.bannerengineering.com.

Generic Wiring Diagram for the Emitter

All pins shown as no connection (nc) are either not connected or are paralleled to the same color wire from the receiver cable.

© Banner Engineering Corp. All rights reserved.

Generic wiring for the Emitter

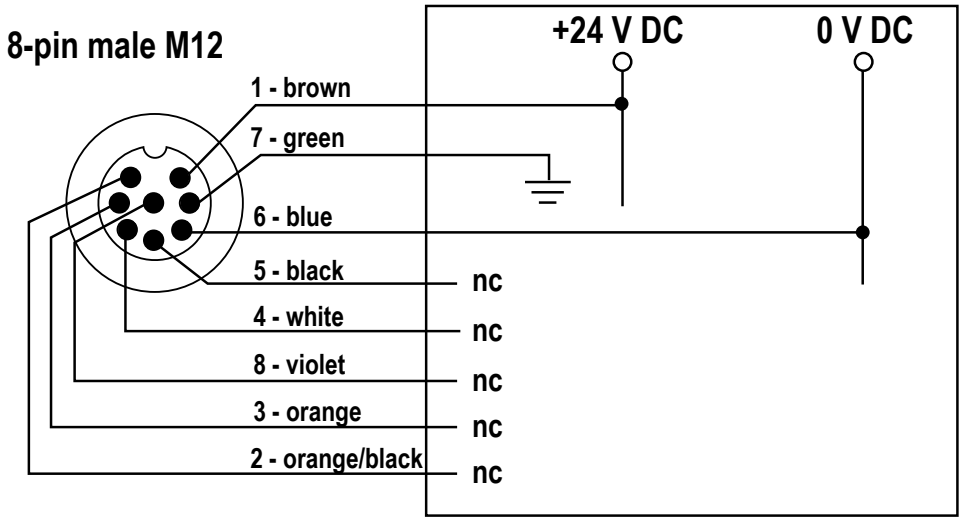

Generic Wiring for a Receiver and Safety Module/Controller or Safety PLC/PES

Generic wiring for a receiver and a Safety Module/Controller or Safety PLC/PES

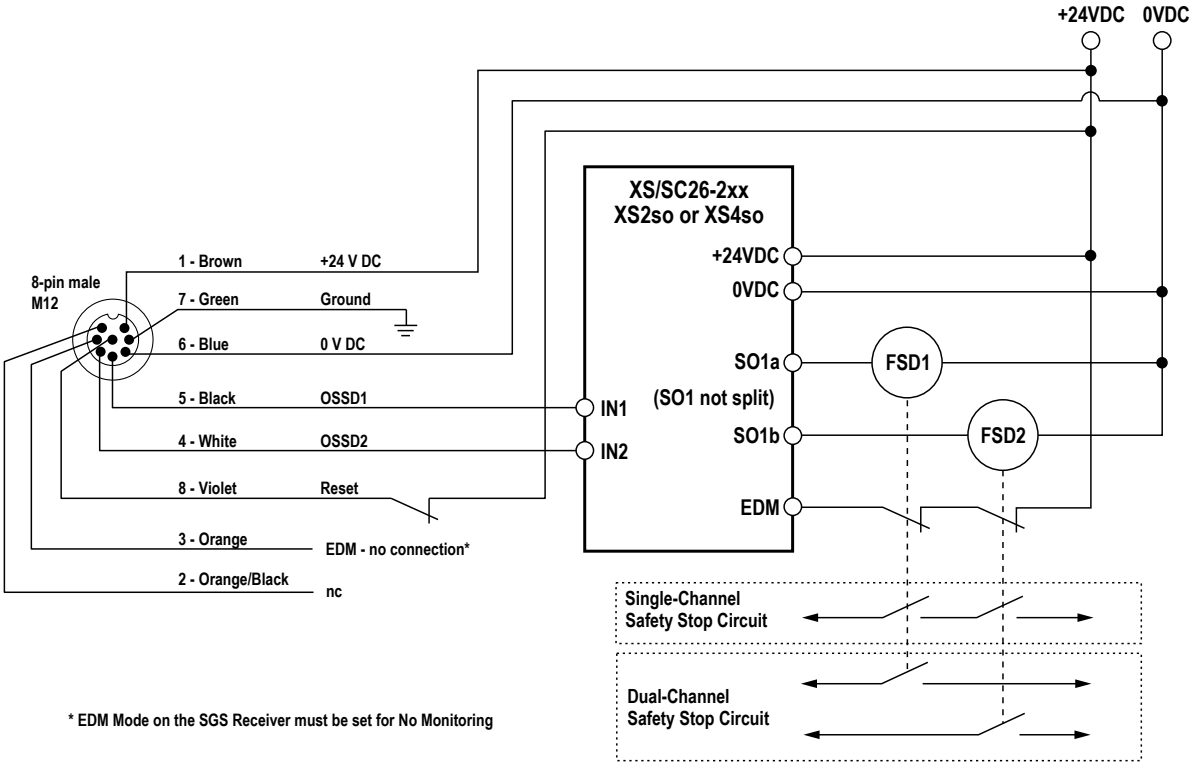

NOTE: Refer to the XS/SC26-2 Instruction Manual (p/n 174868) for complete installation instructions.

© Banner Engineering Corp. All rights reserved.

Generic Wiring for a Receiver and Redundant FSD

Generic wiring for a received and a redundant FSD

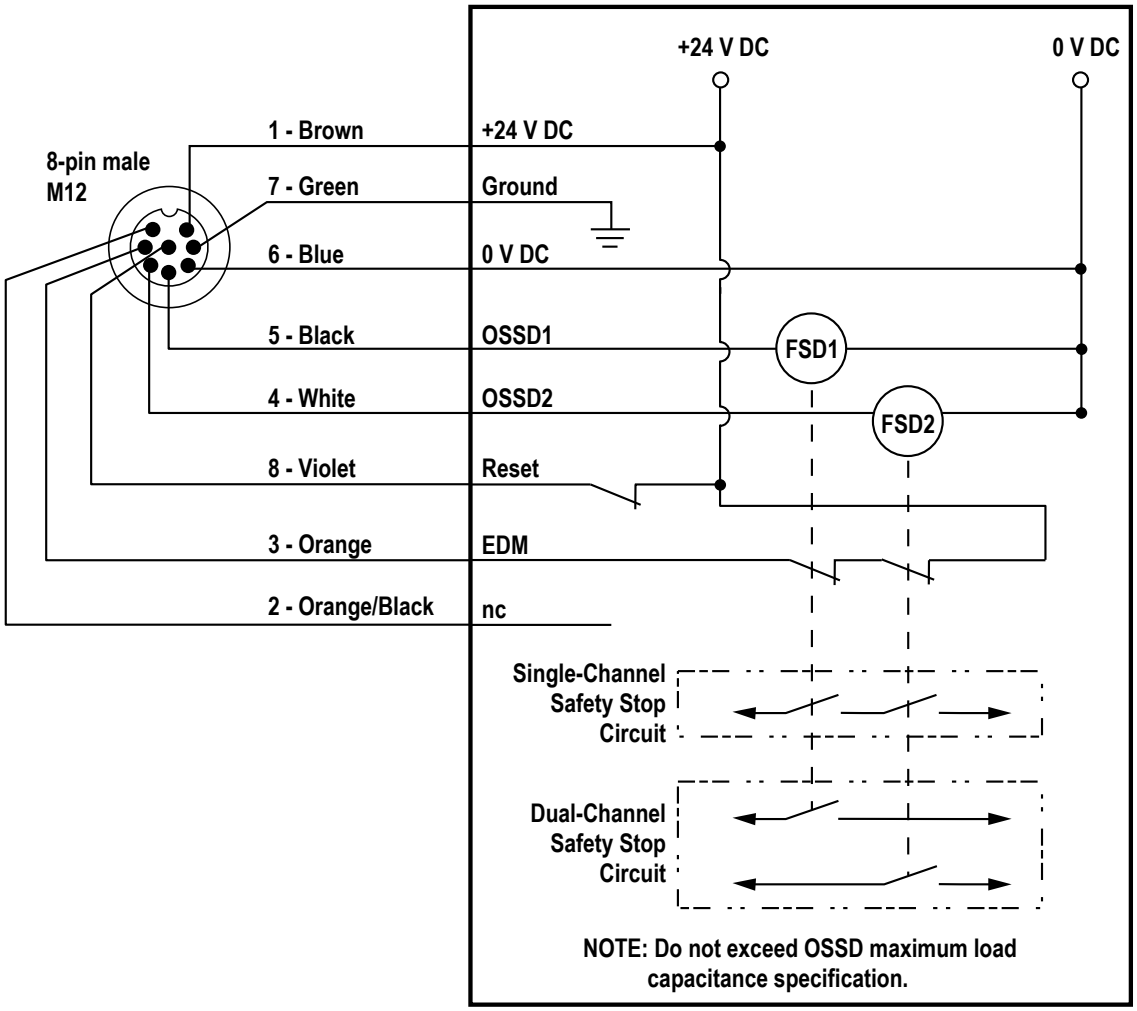

© Banner Engineering Corp. All rights reserved.

Generic Wiring for a Receiver and IM-T-9A Interface Module

Generic wiring for a receiver and IM-T-9A Interface Module

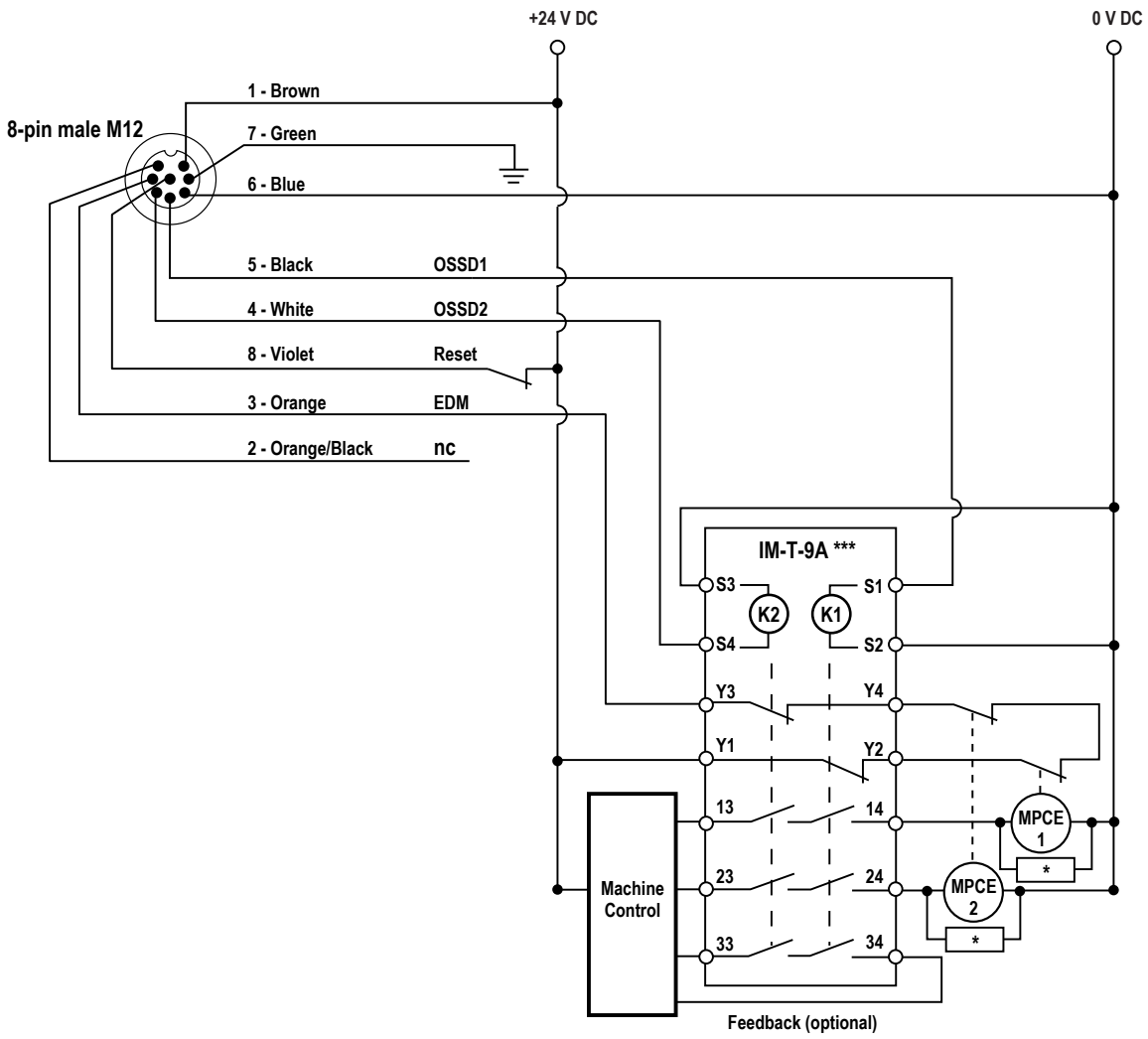

*** Other interfacing modules and solutions available. See the Banner Engineering catalog or website for more information.

NOTE: See the IM-T-..A module datasheet (p/n 62822) for complete installation instructions.

WARNING:

- **Properly install arc or transient suppressors**
- Failure to follow these instructions could result in serious injury or death.
- Install any suppressors as shown across the coils of the machine primary control elements. Do not install suppressors directly across the output contacts of the safety or interface module. In such a configuration, it is possible for suppressors to fail as a short circuit.

© Banner Engineering Corp. All rights reserved.

Chapter Contents

Security Protocol 39
System Configuration Settings 39
Reset Procedures 40
Normal Operation 41
Periodic Checkout Requirements 41

Chapter 6 System Operation

Security Protocol

Certain procedures for installing, maintaining, and operating the SGS must be performed by either Designated Persons or Qualified Persons.

A **Designated Person** is identified and designated in writing, by the employer, as being appropriately trained and qualified to perform system resets and the specified checkout procedures on the SGS. The Designated Person is empowered to:

- Perform manual resets and hold possession of the reset key (see "Reset Procedures" on page 40)
- Perform the Daily Checkout Procedure

A **Qualified Person**, by possession of a recognized degree or certificate of professional training, or by extensive knowledge, training, and experience, has successfully demonstrated the ability to solve problems relating to the installation of the SGS System and its integration with the guarded machine. In addition to everything for which the Designated Person is empowered, the Qualified Person is empowered to:

- Install the SGS System
- Perform all checkout procedures
- Make changes to the internal configuration settings
- Reset the System following a Lockout condition

System Configuration Settings

There is a configuration panel on the top of each sensor. Do not lose the gasket under the white cover. Installing the cover without the gasket lowers the environmental rating.

To change the configuration settings:

1. Remove power from the device.
2. Unscrew the white plastic cover from the top of the unit.
3. Make the desired changes on the configuration panel. Note that each sensor has its own panel and DIP switch settings must match for each sensor in the pair.
4. Reinstall the white plastic cover and gasket to maintain NEMA/IP ratings.

Emitter DIP Switches

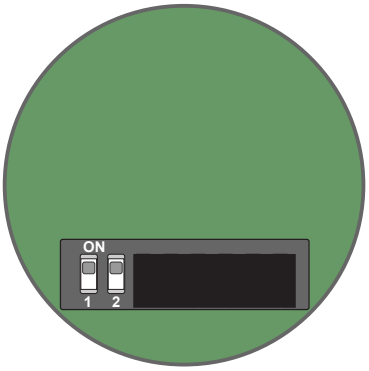

Emitter Settings	Emitter DIP Switches	
	1	2
Scan Code: Uncoded	ON	ON
Scan Code 1	OFF	ON
Scan Code 2	ON	OFF

Continued on page 40

© Banner Engineering Corp. All rights reserved.

Continued from page 39

Receiver DIP Switches

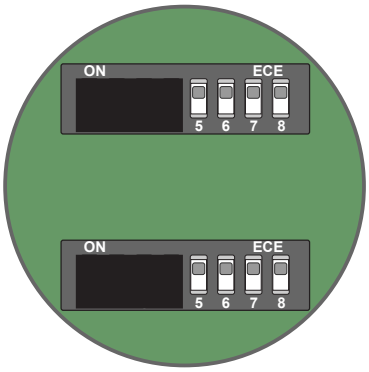

Receiver Settings	Receiver DIP Switches			
	5	6	7	8
Manual start/restart Output Mode	ON			
Auto start/restart Output Mode	OFF			
EDM Mode: Monitoring via Pin 3 (orange wire)		ON		
EDM Mode: No Monitoring		OFF		
Scan Code: Uncoded			ON	ON
Scan Code 1			OFF	ON
Scan Code 2			ON	OFF

The DIP switches are in the ON position (default position) when the switch is away from the numbers and in the OFF position when the switch is toward the numbers.

If **Automatic Start/Restart** (Trip Output) is selected, the OSSD outputs turn on after power is applied, and the receiver passes its internal self-test/ synchronization and recognizes that all beams are clear. The OSSD outputs also turn on after all beams are cleared following a blocked beam.

If **Manual Start/Restart** (Latch Output) is selected, the SGS requires a manual reset for the OSSD outputs to turn on when power is applied and all beams are clear or after a blocked beam has been cleared.

Reset Procedures

Perform system resets using an external reset switch.

Mount the reset switch outside the guarded area and not within reach from within the guarded area. Its location should provide a clear view of the entire safeguarded area. If any hazardous areas are not in view from the switch location, additional means of safeguarding must be provided. Protect the switch from accidental or unintended actuation (for example, through the use of rings or guards).

If supervisory control of the reset switch is required, a key switch may be used, with the key kept in the possession of a Designated or Qualified Person. Using a key switch provides some level of personal control, since the key may be removed from the switch. This hinders a reset while the key is under the control of an individual, but must not be relied upon solely to guard against accidental or unauthorized reset. Spare keys in the possession of others or additional personnel entering the safeguarded area unnoticed may create a hazardous situation.

Receiver manual resets are required in the following situations:

- Automatic Start/Restart—Only after specific types of lockouts
- Manual Start/Restart—At power-up, after each block condition is cleared, or after specific types of lockouts

Reset the Receiver or Active Transceiver After a Lockout

Follow these reset instructions to return the SGS receiver or active transceiver to its active state.

Use this reset procedure to reset the receiver or active transceiver from the following lockout conditions:

- Output Fault
- Optic Fault
- EDM Fault

1. Correct the condition that caused the lockout
2. Hold the reset line open for a minimum of 5 seconds.
3. If the fault is not cleared, turn off the power for 10 seconds, then turn the power back on.

Reset in Manual Start/Restart Mode

Follow these steps to reset your SGS Safety Grid System in Manual Start/Restart mode at startup or after all channels are cleared.

1. Clear all beams of the SGS.

© Banner Engineering Corp. All rights reserved.

If you are starting your SGS, ignore this step.
2. Hold the reset line open for a minimum of 0.5 seconds.
3. Close the reset line.
   The reset cycle is complete.

Normal Operation

System Power-Up

When power is applied, each sensor conducts self-tests to detect critical internal faults, determine configuration settings, and prepare the SGS for operation.

If either sensor detects a critical fault, scanning ceases, the receiver outputs remain Off and diagnostic information displays on the sensor's Diagnostic Display.

If no faults are detected, the SGS receiver looks for an optical sync pattern from the emitter. If the receiver is aligned and receives the proper sync pattern, the SGS enters Run mode and begins scanning to determine the status (blocked or clear) of each beam.

Run Mode

If any beams become blocked while the SGS is running, the receiver outputs turn Off within the stated SGS response time (see "Specifications" on page 51). If all the beams then become clear, the receiver outputs come back On. No resets are needed if the SGS is in Auto Start/Restart mode. If the system is in Manual Start/Restart mode, manually reset the system. All required machine control resets are provided by the machine control circuit.

Internal Faults (Lockouts): If either sensor detects a critical fault, scanning ceases, the receiver outputs turn Off and diagnostic information displays on the sensor's Diagnostic Display. See "Lockout Conditions" on page 46 for resolution of error/fault conditions.

Periodic Checkout Requirements

To ensure continued reliable operation, the System must be checked out periodically. Banner Engineering highly recommends performing the System checkouts as described below. However, a Qualified Person should evaluate these recommendations, based on the specific application and the results of a machine risk assessment, to determine the appropriate content and frequency of checkouts.

At every shift change, power-up, and machine setup change, the Daily Checkout should be performed; this checkout may be performed by a Designated or Qualified Person.

Semi-annually, the System and its interface to the guarded machine should be thoroughly checked out; this checkout must be performed by a Qualified Person (see "Schedule of Checkouts" on page 49). A copy of these test results should be posted on or near the machine.

Whenever changes are made to the System (either a new configuration of the SGS System or changes to the machine), perform the Commissioning Checkout (see "Perform a Commissioning Checkout" on page 49).

Verify Proper Operation The SGS can operate as it is designed only if it and the guarded machine are operating properly, both separately and together. It is the user's responsibility to verify this, on a regular basis, as instructed in "Schedule of Checkouts" on page 49. Failure to correct such problems can result in an increased risk of harm. Before the System is put back into service, verify that the SGS System and the guarded machine perform exactly as outlined in the checkout procedures and any problem(s) are found and corrected.

© Banner Engineering Corp. All rights reserved.

Blank page

Chapter Contents

Cleaning 43
Disposal 43
Warranty Service 43
Banner Engineering Corp Limited Warranty 43
Contact Us 44

Chapter 7 Product Support and Maintenance

Cleaning

Components are best cleaned using mild detergent or window cleaner and a soft cloth. Avoid cleaners containing alcohol, as they may damage the acrylic lens covers.

Disposal

Devices that are no longer in use should be disposed of according to the applicable national and local regulations.

Warranty Service

Contact Banner Engineering for troubleshooting of this device. **Do not attempt any repairs to this Banner device; it contains no field-replaceable parts or components.** If the device, device part, or device component is determined to be defective by a Banner Applications Engineer, they will advise you of Banner's RMA (Return Merchandise Authorization) procedure.

> **IMPORTANT:** If instructed to return the device, pack it with care. Damage that occurs in return shipping is not covered by warranty.

Banner Engineering Corp Limited Warranty

Banner Engineering Corp. warrants its products to be free from defects in material and workmanship for one year following the date of shipment. Banner Engineering Corp. will repair or replace, free of charge, any product of its manufacture which, at the time it is returned to the factory, is found to have been defective during the warranty period. This warranty does not cover damage or liability for misuse, abuse, or the improper application or installation of the Banner product.

THIS LIMITED WARRANTY IS EXCLUSIVE AND IN LIEU OF ALL OTHER WARRANTIES WHETHER EXPRESS OR IMPLIED (INCLUDING, WITHOUT LIMITATION, ANY WARRANTY OF MERCHANTABILITY OR FITNESS FOR A PARTICULAR PURPOSE), AND WHETHER ARISING UNDER COURSE OF PERFORMANCE, COURSE OF DEALING OR TRADE USAGE.

This Warranty is exclusive and limited to repair or, at the discretion of Banner Engineering Corp., replacement. **IN NO EVENT SHALL BANNER ENGINEERING CORP. BE LIABLE TO BUYER OR ANY OTHER PERSON OR ENTITY FOR ANY EXTRA COSTS, EXPENSES, LOSSES, LOSS OF PROFITS, OR ANY INCIDENTAL, CONSEQUENTIAL OR SPECIAL DAMAGES RESULTING FROM ANY PRODUCT DEFECT OR FROM THE USE OR INABILITY TO USE THE PRODUCT, WHETHER ARISING IN CONTRACT OR WARRANTY, STATUTE, TORT, STRICT LIABILITY, NEGLIGENCE, OR OTHERWISE.**

Banner Engineering Corp. reserves the right to change, modify or improve the design of the product without assuming any obligations or liabilities relating to any product previously manufactured by Banner Engineering Corp. Any misuse, abuse, or improper application or installation of this product or use of the product for personal protection applications when the product is identified as not intended for such purposes will void the product warranty. Any modifications to this product without prior express approval by Banner Engineering Corp will void the product warranties. All specifications published in this document are subject to change; Banner reserves the right to modify product specifications or update documentation at any time. Specifications and product information in English supersede that which is provided in any other language. For the most recent version of any documentation, refer to: www.bannerengineering.com.

For patent information, see www.bannerengineering.com/patents.

© Banner Engineering Corp. All rights reserved.

Contact Us

Banner Engineering Corp. headquarters is located at: 9714 Tenth Avenue North | Minneapolis, MN 55441, USA | Phone: + 1 888 373 6767

For worldwide locations and local representatives, visit www.bannerengineering.com.

© Banner Engineering Corp. All rights reserved.

Chapter Contents

Error Codes 45
Lockout Conditions 46
Recovery Procedure 47
Electrical and Optical Noise 47

Chapter 8 Troubleshooting

Error Codes

Emitter Error Codes			
Display	**Status**	**Description**	**User Action**
	emitting	emitting, uncoded	If set for scan code 1, a 1 displays. if set for scan code 2, a 2 displays.
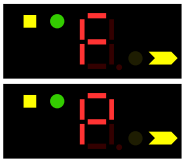	failure lockout (not recoverable)	microcontroller failure	Turn off/on SGS. If the problem persists, contact the factory for technical support.
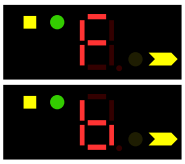	failure lockout (not recoverable)	optical failure	Turn off/on SGS. If the problem persists, contact the factory for technical support.
	off	power supply failure	Check power supply connection. If the problem persists, contact the factory for technical support.
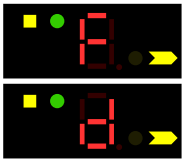	FAILURE LOCKOUT (recoverable)	DIP switch failure	Check the DIP-switch configuration and activate the reset. If the problem persists, contact the factory for technical support.

Receiver Error Codes			
Display	**Status**	**Description**	**User Action**
	latched	beams clear	Activate the reset line to turn the outputs on
	outputs off	beams blocked, OSSDs are off in manual reset mode	Clear the beam path before resetting the device
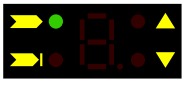	normal operation	OSSDs on	

Continued on page 46

© Banner Engineering Corp. All rights reserved.

Continued from page 45

Receiver Error Codes			
Display	**Status**	**Description**	**User Action**
	outputs off	beams blocked, OSSDs are off in auto reset mode	If set for scan code 1, a 1 displays. if set for scan code 2, a 2 displays.
		EDM function active	
		EDM function not active	
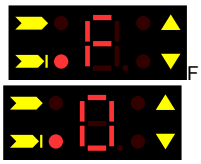 F	failure lockout (recoverable)	failure on one or both OSSDs, OSSDs off	Activate reset line. If the SGS does not reset, contact the factory for technical support.
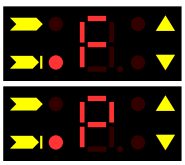	failure lockout (not recoverable)	microcontroller failure, OSSDs off	Turn off/on SGS. If the problem persists, contact the factory for technical support.
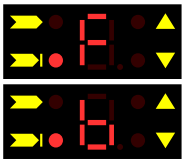	failure lockout (recoverable)	optical failure, OSSDs off	Activate reset line. If the SGS does not reset, contact the factory for technical support.
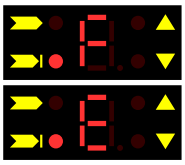	failure lockout (recoverable)	EDM failure, OSSDs off	Check EDM enable line or DIP switches, EDM line, external switching device, and activate reset line. If the SGS does not reset, contact the factory for technical support.
	SGS off	power supply failure, OSSDs off	Check the power supply connection. If the problem persists, contact the factory for technical support.
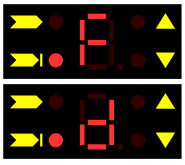	FAILURE LOCKOUT (not recoverable)	DIP switch failure, OSSDs OFF	Check the DIP-switch configuration and turn OFF/ON the SGS. If the problem persists, contact the factory for technical support.

Lockout Conditions

A Lockout condition causes all of the SGS OSSD outputs to turn or remain off, sending a stop signal to the guarded machine. Each sensor provides diagnostic error codes to assist in the identification of the cause(s) of lockouts (see "Error Codes" on page 45).

Receiver Lockout Conditions		Emitter Lockout Conditions	
Green status indicator	Off	Status indicator	Off
Red status indicator	On	Diagnostic display	Error code

Continued on page 47

© Banner Engineering Corp. All rights reserved.

Continued from page 46

Receiver Lockout Conditions		Emitter Lockout Conditions	
Beam indicators	Off		
Diagnostic display	Error code		

If both the emitter and its corresponding receiver do not have the same scan code setting, the receiver indicates the units are not aligned. This is not considered a lockout and can occur if the Scan Code input is not set the same for both sensors.

Recovery Procedure

To recover from a lockout condition, follow these steps.

WARNING:
- **Shut down the machinery before servicing**
- Servicing the Banner Engineering Corp. device or system while the hazardous machinery is operational could result in serious injury or death.
- The machinery to which the Banner Engineering Corp. device or system is connected must not be operating at any time during major service or maintenance. This might require lockout/tagout procedures (refer to OSHA1910.147, ANSI Z244-1, ISO 14118 or the applicable standard for controlling hazardous energy).

WARNING:
- **Lockouts and power failures indicate a problem**
- Attempts to continue to operate machinery by bypassing the Banner Engineering Corp. device or other safeguards is dangerous and could result in serious injury or death.
- A Qualified Person[1] must immediately investigate the problem.

1. Correct all errors.
2. If the lockout is non-recoverable:
   a. Remove power from the sensor and wait a few seconds.
   b. Apply power to the sensor.
3. If the lockout is recoverable: Hold the reset line open for 5 seconds, then release it.
   After a few seconds, the SGS performs a self check. If all faults are cleared, the SGS resumes functioning.

Electrical and Optical Noise

The SGS is designed and manufactured to be highly resistant to electrical and optical noise and to operate reliably in industrial settings. However, serious electrical and/or optical noise may cause a random Trip. In very extreme electrical noise cases, a Lockout is possible. To minimize the effects of transitory noise, the SGS dual scan technology responds to noise only if the noise is detected on multiple consecutive scans.

If random nuisance Trips occur, check the following:
- Poor connection between the sensor and earth ground
- Optical interference from adjacent light screens or other photoelectrics
- Sensor input or output wires routed too close to noisy wiring

Check for Sources of Electrical Noise

It is important that the light screen sensors have a good earth ground. Without this, the System can act like an antenna and random Trips and Lockouts can occur.

All SGS wiring is low voltage; running these wires alongside power wires, motor/servo wires, or other high-voltage wiring can inject noise into the SGS System. It is good wiring practice (and may be required by code) to isolate SGS wires from high-voltage wires.

[1] A person who, by possession of a recognized degree or certificate of professional training, or who, by extensive knowledge, training and experience, has successfully demonstrated the ability to solve problems relating to the subject matter and work.

© Banner Engineering Corp. All rights reserved.

1. Use the Banner model BT-1 Beam Tracker Alignment Aid (see "Alignment Aids" on page 58) to detect electrical transient spikes and surges.
2. Cover the lens of the BT-1 with electrical tape to block optical light from entering the receiver lens.
3. Press the RCV button on the BT-1 and position the Beam Tracker on the wires going to the SGS or any other nearby wires.
4. Install proper transient suppression across the load to reduce the noise.

Check for Optical Noise Sources

To check for optical noise sources, follow these steps.

1. Turn off the emitter or completely block the emitter.
2. Use a Banner BT-1 Beam Tracker (see "Alignment Aids" on page 58) to check for light at the receiver.
3. Press the RCV button on the BT-1 and move it across the full length of the receiver’s sensing window.
4. If the BT-1’s indicator lights up, check for emitted light from other sources (other safety light screens, grids or points, or standard photoelectric sensors).

© Banner Engineering Corp. All rights reserved.

Chapter Contents

Schedule of Checkouts 49
Perform a Commissioning Checkout 49

Chapter 9 Checkout Procedures

This section lists the schedule of checkout procedures and describes where each procedure is documented. Checkouts must be performed as described. Results should be recorded and kept in the appropriate place (for example, near the machine, and/or in a technical file).

Banner Engineering highly recommends performing the System checkouts as described. However, a Qualified Person (or team) should evaluate these generic recommendations considering their specific application and determine the appropriate frequency of checkouts. This will generally be determined by a risk assessment, such as the one contained in ANSI B11.0. The result of the risk assessment will drive the frequency and content of the periodic checkout procedures and must be followed.

Schedule of Checkouts

Checkout cards and this manual can be downloaded at http://www.bannerengineering.com.

Checkout Procedure	When to Perform	Where to Find the Procedure	Who Must Perform the Procedure
Trip Test	At Installation Any time the System, the guarded machine, or any part of the application is altered.	"Conduct a Trip Test" on page 30	Qualified Person
Commissioning Checkout	At Installation Whenever changes are made to the System (for example, either a new configuration of the SGS or changes to the guarded machine).	"Perform a Commissioning Checkout" on page 49	Qualified Person
Shift/Daily Checkout	At each shift change Machine setup change Whenever the System is powered up During continuous machine run periods, this checkout should be performed at intervals not to exceed 24 hours.	**Daily Checkout Card** (Banner p/n 203641) A copy of the checkout results should be recorded and kept in the appropriate place (for example, near or on the machine, in the machine's technical file).	Designated Person or Qualified Person
Semi-Annual Checkout	Every six months following System installation, or whenever changes are made to the System (either a new configuration of the SGS or changes to the machine).	**Semi-Annual Checkout Card** (Banner p/n 203642) A copy of the checkout results should be recorded and kept in the appropriate place (for example, near or on the machine, in the machine's technical file).	Qualified Person

Perform a Commissioning Checkout

Perform a commissioning checkout as part of the System installation after the System has been interfaced to the guarded machine, or after changes are made to the System (either a new configuration of the SGS or changes to the machine). A Qualified Person must perform the procedure. Checkout results should be recorded and kept on or near the guarded machine as required by applicable standards.

WARNING:

- **Do not use the system until the checkouts are verified**
- Attempts to use the guarded/controlled machine before these checks are verified could result in serious injury or death.
- If all these checks cannot be verified, do not attempt to use the safety system that includes the Banner Engineering Corp. device and the guarded/controlled machine until the defect or problem has been corrected.

© Banner Engineering Corp. All rights reserved.

1. Examine the guarded machine to verify that it is of a type and design compatible with the SGS System. See "Examples: Inappropriate Applications" on page 11 for a list of misapplications.
2. Verify the SGS is configured for the intended application.
3. Verify the safety distance (minimum distance) from the closest danger point of the guarded machine to the sensing field is not less than the calculated distance, per "Mechanical Installation" on page 15.
4. Verify:
    a. Access to any dangerous parts of the guarded machine is not possible from any direction not protected by the SGS System, hard (fixed) guarding, or supplemental safeguarding, and
    b. It is not possible for a person to stand between the sensing field and the dangerous parts of the machine, or
    c. Supplemental safeguarding and hard (fixed) guarding, as described by the appropriate safety standards, are in place and functioning properly in any space (between the sensing field and any hazard) which is large enough to allow a person to stand undetected by the SGS.
5. Verify all reset switches are mounted outside and in full view of the guarded area, out of reach of anyone inside the guarded area, and that means of preventing inadvertent use is in place.
6. Examine the electrical wiring connections between the SGS OSSD outputs and the guarded machine's control elements to verify that the wiring meets the requirements stated in "Electrical Connections to the Guarded Machine" on page 31.
7. Inspect the area near the sensing field (including work pieces and the guarded machine) for reflective surfaces (see "Adjacent Reflective Surfaces" on page 20). Remove the reflective surfaces if possible by relocating them, painting, masking or roughening them. Remaining problem reflections will become apparent during the Trip Test.
8. Verify power to the guarded machine is Off. Remove all obstructions from the sensing field. Apply power to the SGS System.
9. Observe the Status indicators and Diagnostic Display:
    - **Lockout:** Error code on display
    - **Blocked:** Red Status indicator is on
    - **Clear:** Green Status is on
10. A Blocked condition indicates that one or more of the beams is misaligned or interrupted. See *Optically Align the Components* in the "Initial Checkout Procedure" on page 26 section to correct this situation.
11. After the green Status indicator is on, conduct a trip test on each sensing field to verify proper System operation and to detect possible optical short circuits or reflection problems. **Do not continue until the SGS passes the trip test.**

    IMPORTANT: Do not expose any individual to any hazard during the following checks.

    

    WARNING:
    - **Clear the guarded area before applying power or resetting the system**
    - Failure to clear the guarded area before applying power could result in serious injury or death.
    - Verify that the guarded area is clear of personnel and any unwanted materials before applying power to the guarded machine or before resetting the system.

12. Apply power to the guarded machine and verify the machine does not start up.
13. Interrupt (block) the sensing field with a 60 mm, opaque, cylindrical test piece (not supplied) and verify it is not possible for the guarded machine to be put into motion while the beam(s) is blocked.
14. Initiate machine motion of the guarded machine and, while it is moving, use the test piece to block a beam. Do not attempt to insert the test piece into the dangerous parts of the machine.

    Upon blocking any beam, the dangerous parts of the machine must come to a stop with no apparent delay.
15. Remove the test piece from the beam. Verify the machine does not automatically restart and the initiation devices must be engaged to restart the machine.
16. Remove electrical power to the SGS.

    Both OSSD outputs should immediately turn Off, and the machine must not be capable of starting until power is re-applied to the SGS.
17. Test the machine stopping response time, using an instrument designed for that purpose, to verify it is the same or less than the overall system response time specified by the machine manufacturer.

Do not continue operation until the entire checkout procedure is complete and all problems are corrected.

© Banner Engineering Corp. All rights reserved.

Chapter Contents

General Specifications 51
Dimensions 52

Chapter 10 Specifications

General Specifications

Electrical Specifications

Supply Voltage
24 V dc ± 20% (At a minimum, use a SELV-rated power supply according to EN IEC 60950. Depending on the installation, a Class 2 low-voltage power supply and circuit as described by NFPA 70 may be required.)

Power Consumption
Emitter: 2.5 W maximum
Receiver: 4 W maximum (without load)

Pollution Degree
2

Safety Category
Type 4 (per EN 61496-1)
SIL 3 (per EN 61508)
SIL CL 3 (per EN 62061)
PLe and Cat. 4 (per EN ISO 13849-1)
PFHd 1.10 × 10^{-8}
Proof Test Interval: 20 years

Electrical Protection
Class III (per IEC 61140)

Outputs Signal Switching Devices (OSSDs)
2 PNP
Short-circuit protection (1.4 A at 55 °C)
Maximum output current: 0.5 A maximum per output
On-state voltage: Power supply value less 1 V dc
Off-state voltage: 0.2 V dc maximum (no load)
Maximum load capacitance: 2.2 µF at 24 V dc

Response Time
11 to 24 ms (varies by model)

Protected Height
500 mm to 1200 mm (varies by model)

Auxiliary Functions
Reset, Restart selection, Alignment, EDM, Test

Connections
8-pin M12 quick disconnect
Power supply cable length: 70 m maximum

Optical Specifications

Light Source
Infrared LED (950 nm wavelength)

Operating Distance
0.5 m to 30 m (for standard range models) or 6 m to 60 m (for long range models)

Ambient Light Rejection
IEC 61496-2

Optic Beams
Varies by model: 2, 3, or 4

Beam Spacing
Varies by model: 300 mm, 400 mm, or 500 mm

Effective Aperture Angle (EAA)
Meets Type 4 requirements per IEC 61496-2, Section 5.2.9

Mechanical and Environmental Specifications

Connections
M12

Construction
Housing: Painted aluminium (yellow RAL 1003)
Caps: PBT Valox 508 (pantone 072-CVC)
Front glass: PMMA

Environmental Rating
IP65 (EN 60529)

Vibration and Shock
0.35 mm width, 10…55 Hz frequency, 20 sweep for each axis, 1 octave/min (EN 60068-2-6)
16 ms (10g) 1.000 shock for each axis (EN 60068-2-29)

Environmental Conditions
Operating: 0 °C to +55 °C (+32 °F to +131 °F)
Storage: –25 °C to +70 °C (–13 °F to +158 °F)
Temperature Class: T6
15% to 95% (non-condensing) relative humidity

Certifications

Banner Engineering BV
Park Lane, Culliganlaan 2F bus 3
1831 Diegem, BELGIUM

© Banner Engineering Corp. All rights reserved.

Required Overcurrent Protection

WARNING: Electrical connections must be made by qualified personnel in accordance with local and national electrical codes and regulations.

Overcurrent protection is required to be provided by end product application per the supplied table.

Overcurrent protection may be provided with external fusing or via Current Limiting, Class 2 Power Supply.

Supply wiring leads < 24 AWG shall not be spliced.

For additional product support, go to www.bannerengineering.com.

Supply Wiring (AWG)	Required Overcurrent Protection (A)	Supply Wiring (AWG)	Required Overcurrent Protection (A)
20	5.0	26	1.0
22	3.0	28	0.8
24	1.0	30	0.5

Dimensions

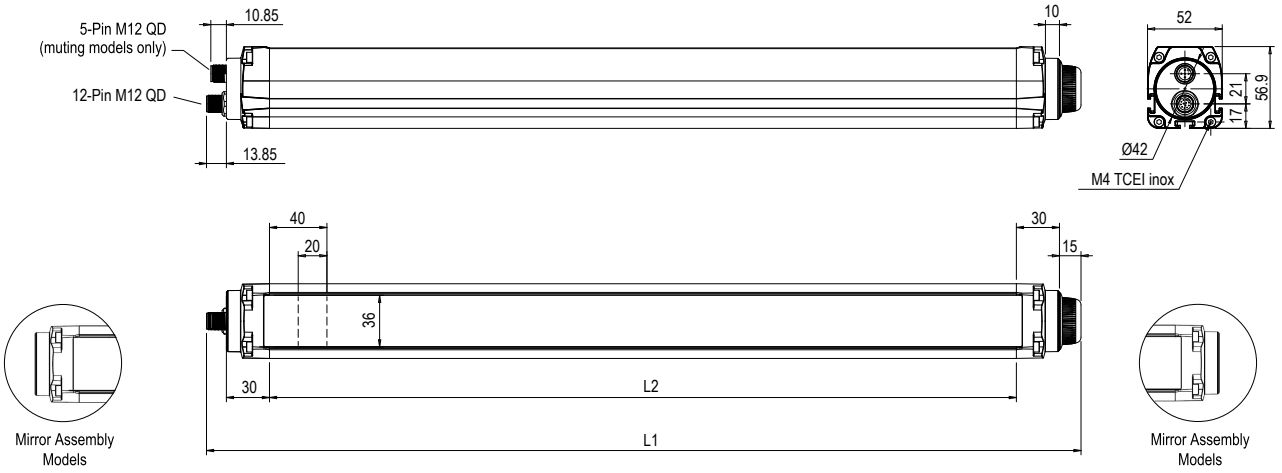

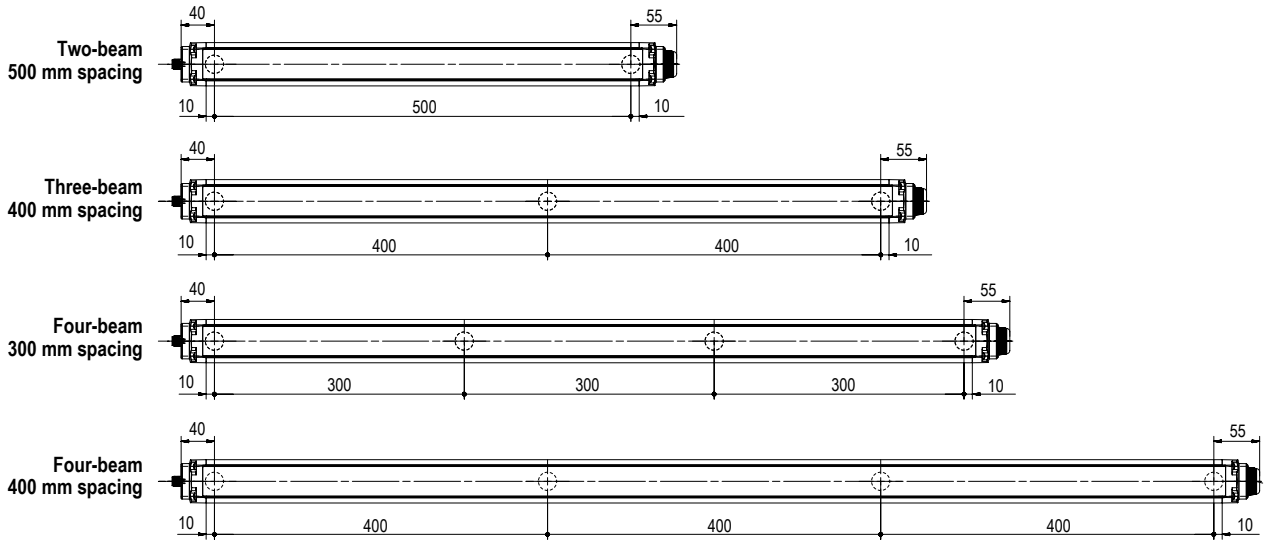

Model	L1 (mm)	L2 (mm)
SGSSP2-500Q88	606.35	520.5
SGSSP3-400Q88	906.35	820.5

Continued on page 53

© Banner Engineering Corp. All rights reserved.

Continued from page 52

Model	L1 (mm)	L2 (mm)
SGSSP4-300Q88	1006.35	920.5
SGSSP4-400Q88	1306.35	1220.5
SGSXP2-500Q88	606.35	520.5
SGSXP3-400Q88	906.35	820.5
SGSXP4-300Q88	1006.35	920.5
SGSXP4-400Q88	1306.35	1220.5

© Banner Engineering Corp. All rights reserved.

Blank page

Chapter Contents

Bracket and Test Piece 55
Cordsets 55
Universal (Input) Safety Modules 57
Safety Controllers 57
Interface Modules 58
Contactors 58
Alignment Aids 58
EZ-LIGHTS® for SGS 59
SSM Series Corner Mirrors 60
MSA Series Stands 61

Chapter 11 Accessories

Bracket and Test Piece

Model	Description
STP-15	60 mm test piece (60 mm resolution systems)
SGSA-MBK-10-4	End-cap bracket kit (includes 4 end brackets and hardware); 360° sensor rotation possible; zinc-plated, 8-gauge, cold-rolled steel

Cordsets

Machine interface cordsets provide power to the emitter/receiver pair. Cordsets typically have yellow PVC cables and black overmolds.

Single-ended (to connect to the machine interface)—**QDEG-8..D** QD-to-flying lead is used with sensors with a 8-pin M12 QD (model ends in Q8). QD-to-flying lead is used with sensors with a 12-pin M12 QD (model ends in Q12).

Splitter cordsets—**CSB-M128..M1281** allow easy interconnection between an 8-pin receiver and 8-pin emitter, and provides a single trunk cable for the optional interchangeable ("swapable") connection.

© Banner Engineering Corp. All rights reserved.

Single-Ended (Machine Interface) Cables

Typically you use one cordset for each emitter and receiver.

QDEG-8..D 8-pin M12/Euro-style QD to flying lead cordsets—This cordset has a M12 QD connector on one end and is unterminated (cut to length) on the other end to interface with guarded machine. PVC jacketed overmold and cables.

Model	Length	Banner Cordset Pinout/Color Code	M12 Connector (female face view)
QDEG-815D	4.5 m (15 ft)		
QDEG-825D	7.6 m (25 ft)		
QDEG-850D	15.2 m (50 ft)		
QDEG-875D	22.8 m (75 ft)		
QDEG-8100D	30.4 m (100 ft)		

Pin	Color	Emitter Function	Receiver Function
1	Brown	+24 V DC	+24 V DC
2	Or/Bk	no connection	no connection
3	Orange	no connection	EDM
4	White	no connection	OSSD2
5	Black	no connection	OSSD1
6	Blue	0 V DC	0 V DC
7	Gn	Ground/Chassis	Ground/Chassis
8	Violet	no connection	Reset

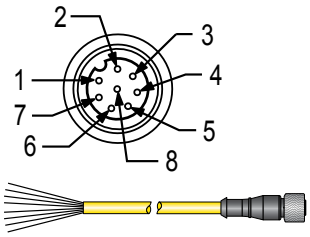

Double-Ended (Sensor Interconnect) Cordsets

DEE2R-8..D 8-pin M12 QD to M12 QD (female-male) cordsets—Use the DEE2R-8... cordsets to extend the length of cordsets and directly connect to other devices with an 8-pin M12 disconnect. Other lengths are available.

Model	Length	Banner Cordset Pinout/Color Code	M12 Connector (female face view)
DEE2R-81D	0.3 m (1 ft)		
DEE2R-83D	0.9 m (3 ft)		
DEE2R-88D	2.5 m (8 ft)		
DEE2R-812D	3.6 m (12 ft)		
DEE2R-815D	4.6 m (15 ft)		
DEE2R-825D	7.6 m (25 ft)		
DEE2R-830D	9.1 m (30 ft)		
DEE2R-850D	15.2 m (50 ft)		
DEE2R-875D	22.9 m (75 ft)		
DEE2R-8100D	30.5 m (100 ft)		

Pin	Emitter Function	Receiver Function
1	+24 V DC	+24 V DC
2	no connection	no connection
3	no connection	EDM
4	no connection	OSSD2
5	no connection	OSSD1
6	0 V DC	0 V DC
7	Ground/Chassis	Ground/Chassis
8	no connection	Reset

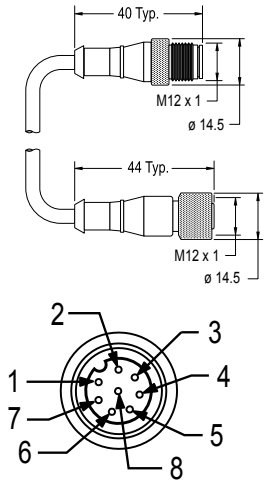

Splitter Cordsets

Model CSB splitter cordsets allow easy interconnection between an SGS 8-pin receiver and its 8-pin emitter, providing a single trunk cable for the optional "swapable" hookup. The model DEE2R-.. double-ended cables may be used to extend the lengths of the QD trunk, branch #1, or branch #2. Branch #1 and branch #2 cable sections are 300 mm (11.8 in) long. The model QDE-8..D single-ended cables may be used to extend the QD trunk for cut-to-length applications.

8-Pin Splitter Cordsets—Allows easy interconnection between an 8-pin receiver and 8-pin emitter, and provides a single trunk cable for the optional interchangeable ("swapable") connection.

© Banner Engineering Corp. All rights reserved.

8-Pin Threaded M12/Euro-Style Splitter Cordsets—Flat Junction			
Model	**Trunk (Male)**	**Branches (Female)**	**Pinout**
CSB-M1280M1280	No trunk	No branches	Male 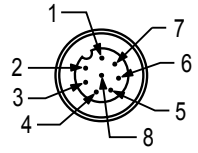
CSB-M1281M1281	0.3 m (1 ft)	2 x 0.3 m (1 ft)	
CSB-M1288M1281	2.44 m (8 ft)		
CSB-M12815M1281	4.57 m (15 ft)		
CSB-M12825M1281	7.62 m (25 ft)		
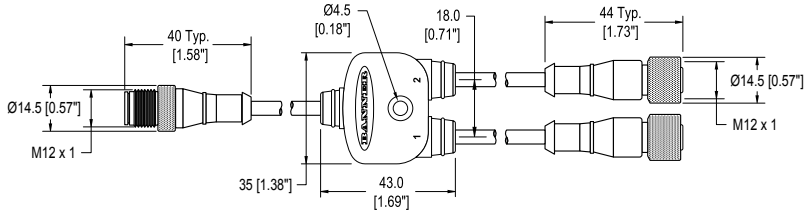			Female 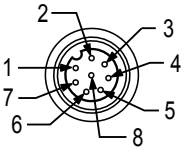 1 = Brown 2 = Or/Bk 3 = Orange 4 = White 5 = Black 6 = Blue 7 = Gn 8 = Violet

Bulkhead Connector

Connector for panel connection of SGS component cables.

Model	Connection	Dimensions
PMEF-810D	8-pin M12 female connector 3 m (10 ft) wires, cut to length (Banner color code); 22 AWG/0.33 mm²	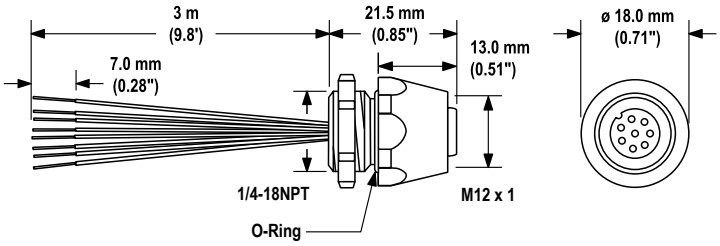

Universal (Input) Safety Modules

UM-FA-xA Safety Modules provide forced-guided, mechanically-linked relay (safety) outputs for the SGS system when an external manual reset (latch) is desired or external device monitoring is required in the application. See datasheet p/n 141249 for more information.

Model	Description
UM-FA-9A	3 normally open (N.O.) redundant-output 6 amp contacts
UM-FA-11A	2 normally open (N.O.) redundant-output 6 amp contacts, plus 1 normally closed (N.C.) auxiliary contact

Safety Controllers

Safety Controllers provide a fully configurable, software-based safety logic solution for monitoring safety and non-safety devices.

For additional models and XS26 expansion modules, see instruction manual p/n 174868.

© Banner Engineering Corp. All rights reserved.

Safety controller models

Non-Expandable Models	Expandable Models	Description
SC26-2	**XS26-2**	26 convertible I/O and 2 redundant solid-state safety outputs
SC26-2d	**XS26-2d**	26 convertible I/O and 2 redundant solid-state safety outputs with display
SC26-2e	**XS26-2e**	26 convertible I/O and 2 redundant solid-state safety outputs with Ethernet
SC26-2de	**XS26-2de**	26 convertible I/O and 2 redundant solid-state safety outputs with display and Ethernet
SC10-2roe		10 inputs, 2 redundant relay safety outputs (3 contacts each) (ISD and Ethernet compatible)
	XS26-ISDd	26 inputs, 2 redundant solid-state safety outputs with display, Ethernet, and 8 ISD channels

Interface Modules

IM-T-..A interface modules provide forced-guided, mechanically-linked relay (safety) outputs for the SGS system with the EDM function selected. The IM-T-..A interface module is required to be monitored by the EDM function. See Banner datasheet p/n 62822 for more information.

Model	Description
IM-T-9A	Interface module, 3 normally open (N.O.) redundant-output 6 amp contacts
IM-T-11A	Interface module, 2 normally open (N.O.) redundant-output 6 amp contacts, plus 1 normally closed (N.C.) auxiliary contact
SR-IM-9A	Interface module, 3 normally open (N.O.) redundant-output contacts (see datasheet)
SR-IM-11A	Interface module, 2 normally open (N.O.) redundant-output contacts (see datasheet), plus 1 normally closed (N.C.) auxiliary contact

Contactors

If used, two contactors per SGS system that are monitored by the EDM circuit are required. See Banner datasheet p/n 111881 for more information.

Model	Description
11-BG00-31-D-024	10 amp positive-guided contactor, 3 N.O., 1 N.C.
BF1801L024	18 amp positive-guided contactor, 3 N.O., 1 N.C. (N.C. contact rated at 10 amps)

Alignment Aids

Model	Description	
LAT-1-SGS	Self-contained visible-beam laser tool for aligning the SGS system components. Includes retroreflective target material and mounting clip.	
SGSA-LAT-2	Replacement adaptor (clip) hardware for SGS models	
SGSA-LAT-1	LAT reflective tape clip-on target for SGS models	
BRT-THG-2-100	2.5 m (100 in) of retroreflective tape, 2 inches wide	

Continued on page 59

© Banner Engineering Corp. All rights reserved.

Continued from page 58

Model	Description	
BT-1	Beam Tracker	

EZ-LIGHTS® for SGS

Provides clear, 360° indication of the SGS receiver's output status and receiver lockouts. EZ-LIGHT or other means of indication must draw less than 100 mA at 24 V DC.

SGS with M18 EZ-LIGHT



Standard Receivers (SGS.-….Q88)—Use with a CSB-M128..M1281 splitter cable and optional DEE2R-8..D double-ended cables. Use only EZ-LIGHT models with the suffix "8PQ8" when connecting to the machine interface connection. See datasheet p/n 121901 for more information.

Models		Construction	Connector/LED Function/Inputs
	**M18RGX8PQ8** [1]	Nickel-plated brass housing, M18 × 1 thread; thermoplastic lens Fully encapsulated IP67	8-pin M12 Integral QD Red/green indication follows OSSD output of the SGS receiver **Red ON**: Power ON, Beam Blocked, or Lockout **Green ON**: Power ON or Beam Clear
	**T18RGX8PQ8**	Thermoplastic polyester housing, thermoplastic lens Fully encapsulated IP67	
	**T30RGX8PQ8**		

Continued on page 60

[1] Available in a kit that includes one M18 EZ-LIGHT, one SMB18A mounting bracket, and hardware for mounting to the side channel of an SGS housing (kit model number **EZA-M18RGX8PQ8)**.

© Banner Engineering Corp. All rights reserved.

Continued from page 59

Standard Receivers (SGS.-….Q88)—Use with a CSB-M128..M1281 splitter cable and optional DEE2R-8..D double-ended cables. Use only EZ-LIGHT models with the suffix "8PQ8" when connecting to the machine interface connection. See datasheet p/n 121901 for more information.

Models		Construction	Connector/LED Function/Inputs
	**K30LRGX8PQ8**	Polycarbonate housing, 30 mm thermoplastic dome, 22 mm base mount Fully encapsulated, IP67	
	**K50LRGX8PQ8**	Polycarbonate housing, 50 mm thermoplastic dome, 30 mm base mount Fully encapsulated, IP67	
	**K80LRGX8PQ8**	Polycarbonate housing, 50 mm thermoplastic dome, flat or DIN mount Encapsulated electronics, IP67	

SSM Series Corner Mirrors

- Robust for heavy-duty applications
- Extra wide for use with long-range optical safety systems
- Rear-surface glass mirrors are rated at 85% efficiency. The total sensing range decreases by approximately 8% per mirror. See mirror datasheet p/n 61934 or www.bannerengineering.com for further information.
- Stainless steel reflective surface models are also available. See datasheet p/n 67200.
- Robust construction, two mounting brackets and hardware included.
- EZA-MBK-2 adapter bracket is required for use with MSA Series stand, refer to the mounting bracket accessories list.
- Brackets may be inverted from the positions shown, decreasing dimension L1 by 58 mm (2.3 in).

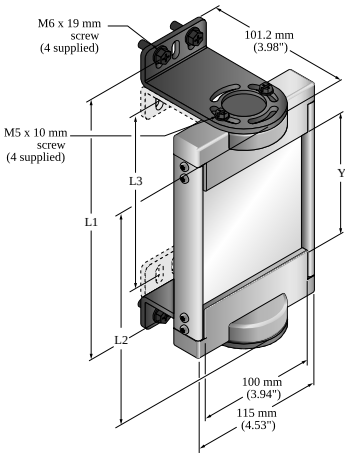

Mirror Model	Fits Model	Reflective Area Y	Mounting L1	Mounting L2
SSM-550	SGS...2-500Q88	550 mm (21.7 in)	661 mm (26 in)	628 mm (24.7 in)
SSM-875	SGS...3-400Q88	875 mm (34.4 in)	986 mm (38.8 in)	953 mm (37.5 in)
SSM-975	SGS...4-300Q88	975 mm (38.4 in)	1086 mm (42.8 in)	1053 mm (41.5 in)
SSM-1275	SGS...4-400Q88	1275 mm (47.2 in)	1386 mm (54.6 in)	1353 mm (53.3 in)

© Banner Engineering Corp. All rights reserved.

MSA Series Stands

Stand Model	Pole Height	Useable Stand Height	Overall Stand Height	
MSA-S24-1	610 mm (24 in)	483 mm (19 in)	616 mm (24.25 in)	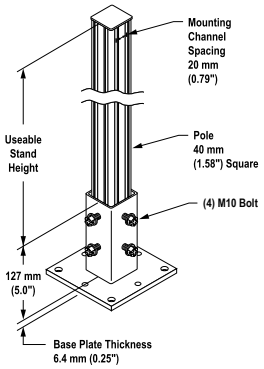
MSA-S42-1	1067 mm (42 in)	940 mm (37 in)	1073 mm (42.25 in)	
MSA-S66-1	1676 mm (66 in)	1550 mm (61 in)	1682 mm (66.25 in)	
MSA-S84-1	2134 mm (84 in)	2007 mm (79 in)	2140 mm (84.25 in)	
MSA-S105-1	2667 mm (105 in)	2667 mm (100 in)	2673 mm (105.25 in)	

NOTE: One **EZA-MBK-2** Adapter Bracket Kit is required per component.

© Banner Engineering Corp. All rights reserved.

Blank page

Chapter Contents

Chapter 12 Safety Glossary

A

ANSI (American National Standards Institute)

Acronym for the American National Standards Institute, an association of industry representatives that develops technical standards (including safety standards). These standards comprise a consensus from a variety of industries on good practice and design. ANSI standards relevant to the application of safety products include the ANSI B11 Series, and ANSI/RIA R15.06. See "Standards and Regulations" on page 7.

Auto Power-Up

A safety light curtain system feature that enables the system to be powered up into Run mode (or recover from a power interruption) without requiring a manual reset.

Auto Start/Restart (Trip) Condition

The safety outputs of a safety light curtain system turn off when an object completely blocks a beam. In an Auto Start/Restart condition, the safety outputs re-energize when the object is removed from the defined area.

Auto Start/Restart (Trip) Initiate

The resetting of a safeguard causing the initiation of machine motion or operation. Auto Start/Restart Initiate is not allowed as a means to initiate a machine cycle per NFPA 79 and ISO 60204-1, and is commonly confused with PSDI.

B

Blanking

A programmable feature of a safety light curtain system that allows the light curtain to ignore certain objects located within the defined area. See **Floating Blanking** and **Reduced Resolution**.

Blocked Condition

A condition that occurs when an opaque object of sufficient size blocks/interrupts one or more light curtain beams. When a blocked condition occurs, OSSD1 and OSSD2 outputs simultaneously turn off within the system response time.

Brake

A mechanism for stopping, slowing, or preventing motion.

C

Cascade

Series connection (or "daisy-chaining") of multiple emitters and receivers.

CE

Abbreviation for "Conformité Européenne" (French translation of "European Conformity"). The CE mark on a product or machine establishes its compliance with all relevant European Union (EU) Directives and the associated safety standards.

Clutch

A mechanism that, when engaged, transmits torque to impart motion from a driving member to a driven member.

Control Reliability

A method of ensuring the performance integrity of a control system or device. Control circuits are designed and constructed so that a single failure or fault within the system does not prevent the normal stopping action from being applied to the machine when required, or does not create unintended machine action, but does prevent initiation of successive machine action until the failure is corrected.

CSA

Abbreviation for Canadian Standards Association, a testing agency similar to Underwriters Laboratories, Inc. (UL) in the United States. A CSA-certified product has been type-tested and approved by the Canadian Standards Association as meeting electrical and safety codes.

D

© Banner Engineering Corp. All rights reserved.

Defined Area

The "screen of light" generated by a safety light curtain system, defined by the height and the safety distance (minimum distance) of the system.

Designated Person

A person or persons identified and designated in writing, by the employer, as being appropriately trained and qualified to perform a specified checkout procedure.

E

Emitter

The light-emitting component of a safety light curtain system, consisting of a row of synchronized modulated LEDs. The emitter, together with the receiver (placed opposite), creates a "screen of light" called the defined area.

External Device Monitoring (EDM)

A means by which a safety device (such as a safety light curtain) actively monitors the state (or status) of external devices that may be controlled by the safety device. A lockout of the safety device will result if an unsafe state is detected in the external device. External device(s) may include, but are not limited to: MPCEs, captive contact relays/contactors, and safety modules.

F

Failure to Danger

A failure that delays or prevents a machine safety system from arresting dangerous machine motion, thereby increasing risk to personnel.

Final Switching Device (FSD)

The component of the machine's safety-related control system that interrupts the circuit to the machine primary control element (MPCE) when the output signal switching device (OSSD) goes to the OFF-state.

FMEA (Failure Mode and Effects Analysis)

A testing procedure by which potential failure modes in a system are analyzed to determine their results or effects on the system. Component failure modes that produce either no effect or a Lockout condition are permitted; failures that cause an unsafe condition (a failure to danger) are not. Banner safety products are extensively FMEA tested.

G

Guarded Machine

The machine whose point of operation is guarded by the safety system.

H

Hard (Fixed) Guard

Screens, bars, or other mechanical barriers affixed to the frame of the machine intended to prevent entry by personnel into the hazardous area(s) of a machine, while allowing the point of operation to be viewed. The maximum size of the openings is determined by the applicable standard, such as Table O-10 of OSHA 29CFR1910.217, also called a "fixed barrier guard."

Harm

Physical injury or damage to the health of people, which may result through direct interaction with the machine or through indirect means, as a result of damage to property or to the environment.

Hazard Point

The closest reachable point of the hazardous area.

Hazardous Area

An area that poses an immediate or impending physical hazard.

I

Internal Lockout

A Lockout condition that is due to an internal safety system problem. Generally, indicated by the red Status indicator LED (only) flashing. Requires the attention of a Qualified Person.

K

Key Reset (Manual Reset)

A key-operated switch used to reset a safety light curtain system to Run mode following a Lockout condition, or to enable machine operation following a Manual Start/Restart (Latch) condition. Also refers to the act of using the switch.

© Banner Engineering Corp. All rights reserved.

L

Lockout Condition

A safety light curtain condition that is automatically attained in response to certain failure signals (an internal lockout). When a Lockout condition occurs, the safety light curtain's safety outputs turn OFF; the failure must be corrected and a manual reset is required to return the system to Run mode.

M

Machine Primary Control Element (MPCE)

An electrically powered element, external to the safety system, which directly controls the machine's normal operating motion in such a way that the element is last (in time) to operate when machine motion is either initiated or arrested.

Machine Response Time

The time between the activation of a machine-stopping device and the instant when the dangerous parts of the machine reach a safe state by being brought to rest.

Manual Start/Restart (Latch) Condition

The safety outputs of a safety light curtain system turn off when an object completely blocks a beam. In a Manual Start/Restart condition, the safety outputs stay off when the object is removed from the defined area. To re-energize the outputs, perform a proper manual reset.

Minimum Object Sensitivity (MOS)

The minimum-diameter object that a safety light curtain system can reliably detect. Objects of this diameter or greater will be detected anywhere in the defined area. A smaller object can pass undetected through the light if it passes exactly midway between two adjacent light beams. Also known as MODS (Minimum Object Detection Size). See also **Specified Test Piece**.

Muting

The automatic suspension of the safeguarding function of a safety device during a non-hazardous portion of the machine cycle.

O

OFF State

The state in which the output circuit is interrupted and does not permit the flow of current.

ON State

The state in which the output circuit is complete and permits the flow of current.

OSHA (Occupational Safety and Health Administration)

A U.S. Federal agency, the Division of the U.S. Department of Labor, that is responsible for the regulation of workplace safety.

OSSD

Output Signal Switching Device. The safety outputs that are used to initiate a stop signal.

P

Part-Revolution Clutch

A type of clutch that may be engaged or disengaged during the machine cycle. Part-revolution clutched machines use a clutch/brake mechanism, which can arrest machine motion at any point in the stroke or cycle.

Pass-Through Hazard

A pass-through hazard is associated with applications where personnel may pass through a safeguard (which issues a stop command to remove the hazard), and then continues into the guarded area, such as in perimeter guarding. Subsequently, their presence is no longer detected, and the related danger becomes the unexpected start or restart of the machine while personnel are within the guarded area.

Point-of-Operation Guarding

Safeguards, such as hard guards or safety light curtains, which are designed to protect personnel from hazardous machine motion when close to the machine's point of operation.

© Banner Engineering Corp. All rights reserved.

PSDI (Presence-Sensing Device Initiation)

An application in which a presence-sensing device is used to actually start the cycle of a machine. In a typical situation, an operator manually positions a part in the machine for the operation. When the operator moves out of the danger area, the presence-sensing device starts the machine (no start switch is used). The machine cycle runs to completion, and the operator can then insert a new part and start another cycle. The presence-sensing device continually guards the machine. Single-break mode is used when the part is automatically ejected after the machine operation. Double-break mode is used when the part is both inserted (to begin the operation) and removed (after the operation) by the operator. PSDI is commonly confused with "Trip Initiate." PSDI is defined in OSHA CFR1910.217. Banner safety light curtain systems may not be used as PSDI devices on mechanical power presses, per OSHA regulation 29 CFR 1910.217.

Q

Qualified Person

A person who, by possession of a recognized degree or certificate of professional training, or who, by extensive knowledge, training and experience, has successfully demonstrated the ability to solve problems relating to the subject matter and work.

R

Receiver

The light-receiving component of a safety light curtain system, consisting of a row of synchronized phototransistors. The receiver, together with the emitter (placed opposite), creates a "screen of light" called the defined area.

Reset

The use of a manually operated switch to restore the safety outputs to the On state from a lockout or a Manual Start/ Restart (Latch) condition.

Resolution

See **Minimum Object Sensitivity**.

S

Self-Checking (Circuitry)

A circuit with the capability to electronically verify that all of its own critical circuit components, along with their redundant backups, are operating properly. Banner safety light curtain systems and safety modules are self-checking.

Safety Distance

The minimum distance required to allow the machine’s hazardous motion to stop completely, before a hand (or other object) can reach the nearest hazard point. Measured from the midpoint of the defined area to the nearest hazard point. Factors that influence minimum separation distance include the machine stop time, the light curtain system response time, and the light curtain minimum object detection size.

Specified Test Piece

An opaque object of sufficient size used to block a light beam to test the operation of a safety light curtain system. When inserted into the defined area and placed in front of a beam, the test piece causes the outputs to de-energize.

Supplemental Guarding

Additional safeguarding device(s) or hard guarding, used to prevent a person from reaching over, under, through or around the primary safeguard or otherwise accessing the guarded hazard.

T

Test Piece

An opaque object of sufficient size used to block a light beam to test the operation of a safety light curtain system.

U

UL (Underwriters Laboratory)

A third-party organization that tests products for compliance with appropriate standards, electrical codes, and safety codes. Compliance is indicated by the UL listing mark on the product.

© Banner Engineering Corp. All rights reserved.

LinkedIn

Twitter

Facebook



© 2023. All rights reserved.
www.bannerengineering.com