# Features

Miniature self-contained opposed-mode DC photoelectric sensor



- Self-contained DC sensor in a miniature right-angle housing
- IP54; NEMA 4 construction; hermetically-sealed optics
- 1.8 m (70 in) opposed range
- Choose models for light operate or dark operate; choose either NPN or PNP output models
- Choice of integral cable or quick-disconnect connector
- Mounting bracket is included

**WARNING:**

- **Do not use this device for personnel protection**
- Using this device for personnel protection could result in serious injury or death.
- This device does not include the self-checking redundant circuitry necessary to allow its use in personnel safety applications. A device failure or malfunction can cause either an energized (on) or de-energized (off) output condition.

# Models

| Models | Connector | NPN/ PNP | LO/DO |
|---|---|---|---|
| **Q146E** | 2 m (6.5 in) cable | - | - |
| **Q146EQ** | 150 mm (6 in) cable with a 3-pin M8 quick disconnect connector | | |
| **Q14AN6R** | 2 m (6.5 in) cable | NPN | LO |
| **Q14AN6RQ** | 150 mm (6 in) cable with a 3-pin M8 quick disconnect connector | | LO |
| **Q14RN6R** | 2 m (6.5 in) cable | | DO |
| **Q14RN6RQ** | 150 mm (6 in) cable with a 3-pin M8 quick disconnect connector | | DO |
| **Q14AP6R** | 2 m (6.5 in) cable | PNP | LO |
| **Q14AP6RQ** | 150 mm (6 in) cable with a 3-pin M8 quick disconnect connector | | LO |
| **Q14RP6RQ** | 150 mm (6 in) cable with a 3-pin M8 quick disconnect connector | | DO |

Models with a quick disconnect require a mating cordset.

In light operate (LO) mode, the output is ON when the target returns the same or more light to the sensor and OFF when the sensor detects less light than the configured/taught target. In dark operate (DO) mode, the output is ON when the target returns less light to the sensor than the configured target and OFF when the sensor detects more light than the configured/taught target.

In **opposed** sensing modes, light operate means the output is on when the beam is unblocked and dark operate means the output is on when the beam is blocked.

The following models are no longer available for order but are still covered by the information in this document.

| Models | Connector | NPN/ PNP | LO/DO |
|---|---|---|---|
| **Q14RP6R** | 2 m (6.5 in) cable | PNP | DO |

Original Instructions
13-May-26

© Banner Engineering Corp. All rights reserved.
www.bannerengineering.com

45727
p/n: 45727 Rev E

ПРОМЭЛЕКТРОНИКА/ sales@prom-elec.com

# Mounting Orientation

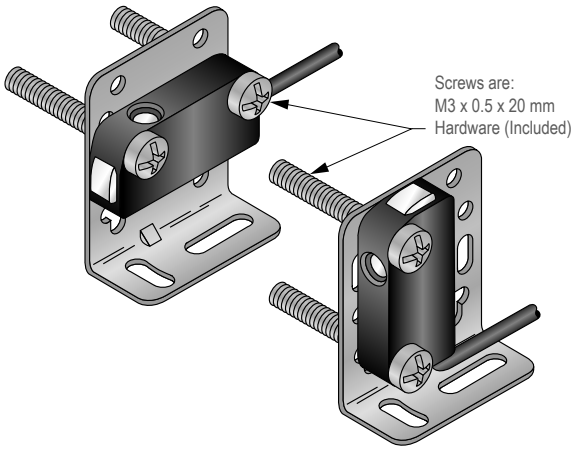


# Wiring Diagrams

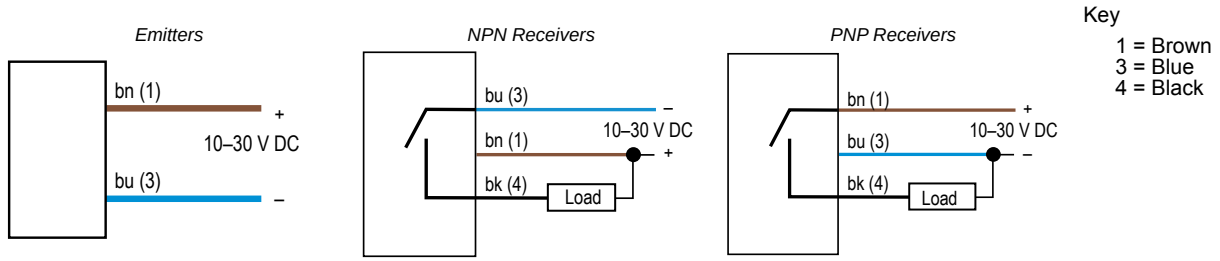


Quick disconnect wiring diagrams are functionally identical.

# Specifications

**Supply Voltage and Current**
10 V DC to 30 V DC (10% maximum ripple)
Emitter: 15 mA
Receiver: 15 mA (exclusive of load)

**Supply Protection Circuitry**
Protected against reverse polarity

**Output Configuration**
SPST solid-state DC switch;
Choose NPN (current sinking) or PNP (current sourcing) models
Choose light operate (N.O.) or dark operate (N.C.) models

**Output Rating**
150 mA maximum
Off-state leakage current: <10 microamps at 30V DC
On-state saturation voltage: <0.5 V at 10 mA DC; <1.0 V at 150 mA DC

**Output Protection Circuitry**
Protected against output short-circuit, continuous overload, and false pulse on power-up

**Output Response Time**
8 ms ON, 4 ms OFF

**Repeatability**
1.0 ms

**Sensing Beam**
Infrared, 880 nm

**Range**
1.8 m (70 in)

**Indicators**
**Receiver:** Two LEDs, Green and Amber
Green on = power to sensor is ON
Green flashing = output is overloaded
Amber on = light is sensed
Amber flashing = marginal excess gain (1-1.5x) in light condition
**Emitter:** One GREEN LED indicates power to sensor is ON

**Construction**
Housings are black ABS; Rated UL 94V0
Lenses are hermetically-sealed glass
Stainless steel M3 mounting hardware is included; stainless steel mounting bracket is included

**Connections**
2 m (6.5 ft) or 9 m (30 ft) attached cable, or 150 mm (6 in) 3-pin Pico-style quick-disconnect fitting. QD cables are ordered separately.

**Environmental Rating**
IP54; NEMA 4


© Banner Engineering Corp. All rights reserved.
www.bannerengineering.com

**Operating Conditions**

–20 °C to +55 °C (–4 °F to +131°F)

90% at +50 °C maximum relative humidity (non-condensing)

**Certifications**

CE

# Dimensions

*Q14*

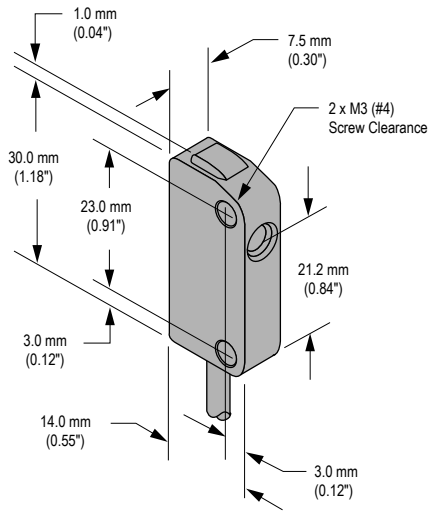


*Mounting bracket (included)*

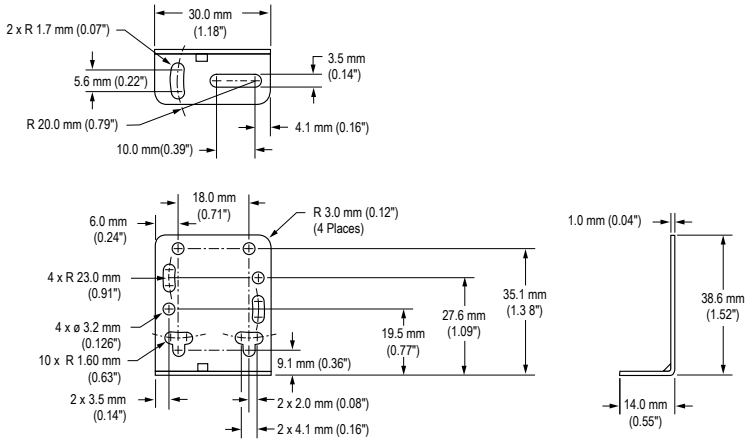


# Performance Curves

*Excess gain*

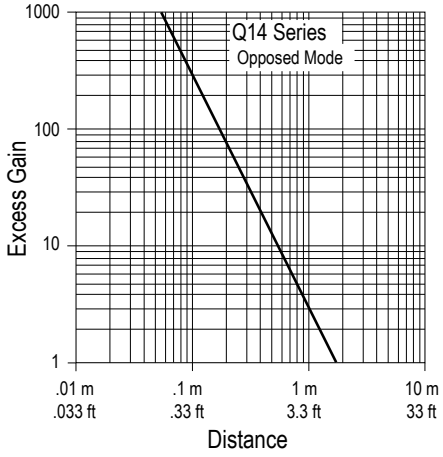


*Beam pattern*

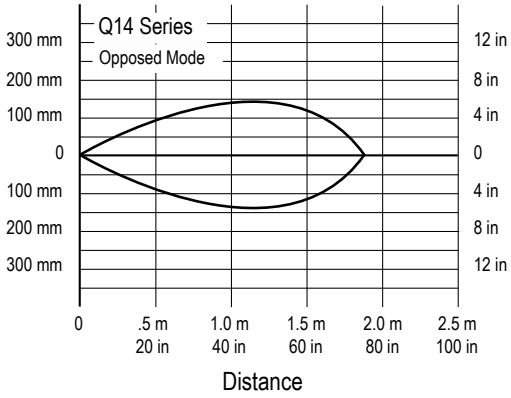



© Banner Engineering Corp. All rights reserved.
www.bannerengineering.com

# Quick-Disconnect Cables

| 3-pin Single-Ended M8 Female Cordsets | | | |
|---|---|---|---|
| **Model** | **Length** | **Dimensions** | **Pinout (Female)** |
| **PKG3M-2** | 2 m (6.56 ft) | 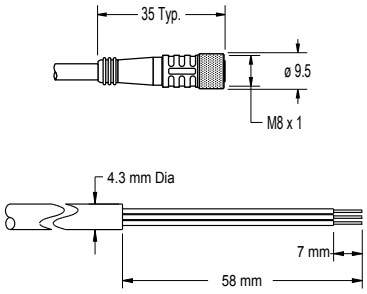 | 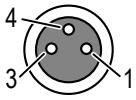<br>1 = Brown<br>3 = Blue<br>4 = Black |
| **PKG3M-4** | 4 m (13.12 ft) | | |
| **PKG3M-5** | 5 m (16.4 ft) | | |
| **PKG3M-7** | 7 m (22.96 ft) | | |
| **PKG3M-9** | 9 m (29.52 ft) | | |
| **PKG3M-10** | 10 m (32.81 ft) | | |

# Banner Engineering Corp Limited Warranty

Banner Engineering Corp. warrants its products to be free from defects in material and workmanship for one year following the date of shipment. Banner Engineering Corp. will repair or replace, free of charge, any product of its manufacture which, at the time it is returned to the factory, is found to have been defective during the warranty period. This warranty does not cover damage or liability for misuse, abuse, or the improper application or installation of the Banner product.

**THIS LIMITED WARRANTY IS EXCLUSIVE AND IN LIEU OF ALL OTHER WARRANTIES WHETHER EXPRESS OR IMPLIED (INCLUDING, WITHOUT LIMITATION, ANY WARRANTY OF MERCHANTABILITY OR FITNESS FOR A PARTICULAR PURPOSE), AND WHETHER ARISING UNDER COURSE OF PERFORMANCE, COURSE OF DEALING OR TRADE USAGE.**

This Warranty is exclusive and limited to repair or, at the discretion of Banner Engineering Corp., replacement. **IN NO EVENT SHALL BANNER ENGINEERING CORP. BE LIABLE TO BUYER OR ANY OTHER PERSON OR ENTITY FOR ANY EXTRA COSTS, EXPENSES, LOSSES, LOSS OF PROFITS, OR ANY INCIDENTAL, CONSEQUENTIAL OR SPECIAL DAMAGES RESULTING FROM ANY PRODUCT DEFECT OR FROM THE USE OR INABILITY TO USE THE PRODUCT, WHETHER ARISING IN CONTRACT OR WARRANTY, STATUTE, TORT, STRICT LIABILITY, NEGLIGENCE, OR OTHERWISE.**

Banner Engineering Corp. reserves the right to change, modify or improve the design of the product without assuming any obligations or liabilities relating to any product previously manufactured by Banner Engineering Corp. Any misuse, abuse, or improper application or installation of this product or use of the product for personal protection applications when the product is identified as not intended for such purposes will void the product warranty. Any modifications to this product without prior express approval by Banner Engineering Corp will void the product warranties. All specifications published in this document are subject to change; Banner reserves the right to modify product specifications or update documentation at any time. Specifications and product information in English supersede that which is provided in any other language. For the most recent version of any documentation, refer to: www.bannerengineering.com.

For patent information, see www.bannerengineering.com/patents.


© Banner Engineering Corp. All rights reserved.
www.bannerengineering.com