MODEL NO.	"L"	"D"	P/N
IA2.5S	6	.125	17888
IA2.7S	8	.125	17827
IA2.83S	10	.125	17847
IA2.9S	11	.125	17903
IA21.1S	13	.125	17829
IA21.2S	14	.125	17828
IA21.33S	16	.125	17946
IA21.5S	18	.125	17947
IA21.65S	19.5	.125	00000
IA210S	120	.125	17375
IA23S	36	.125	17299

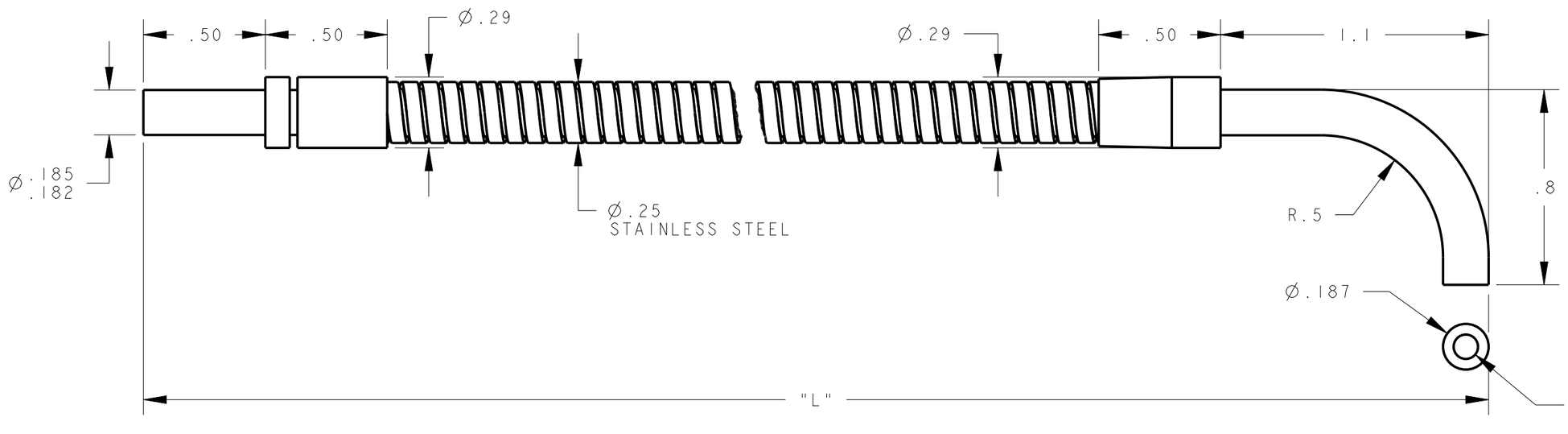

NOTES:
1. ALL DIMENSIONS ARE MILLIMETERS [INCHES] UNLESS OTHERWISE NOTED.
2. REFER TO "www.bannerengineering.com" FOR ADDITIONAL DATA AND SPECIFICATIONS.

This drawing is the property of BANNER ENGINEERING CORP. Any use or reproduction, in any form, without prior written permission of Banner is prohibited.
© 2015 Banner Engineering Corp.

THIRD ANGLE PROJECTION

BANNER ENGINEERING CORP.
www.bannerengineering.com

TITLE

IA2 SERIES SS TERMINATED

SIZE	DRAWING NO.	REV.
B	161910	A
SCALE 2:1	SHEET 1 OF 2	

CREO

ПРОМЭЛЕКТРОНИКА/ sales@prom-elec.com

MODEL NO.	"L"	"D"	P/N
IAII0S	I20	.062	I2954
IA.75I0S	I20	.046	00000
IA24.IS	49	.I25	23788
IA230S	360	.I25	24385
IA2I7S	204	.I25	23354
IAI9S	I08	.062	00000
IA22.3S	27	.I25	23698
IA2I.I5S	I3.5	.I25	23697
IA226S	3I2	.I25	23830
IA223S	276	.I25	23969
IAI.7S	8	.062	24I46
IA28SM600	96	.I25	24290
IAII2S	I44	.I25	00000
IAI.5S	6	.062	24370
IA28.83S	I06	.I25	00000
IA2I4.8S	I77	.I25	00000
IAI.8S	9	.062	24578
IA2.38S	4.6	.I25	00000
IA2.66S	8	.I25	00000
IA.443S	36	.027	00000
IA2I0SM600	I20	.I25	62298
IAI.5.7S	8	.090	59272
IAII.IS	I3	.062	00000
IA226.3S	3I5	.I25	00000
IA227S	324	.I25	00000
IA2I2S	I44	.I25	I7885
IA2I3S	I56	.I25	I739I
IA2I4S	I68	.I25	20852
IA2I5S	I80	.I25	20861
IA2I8S	2I6	.I25	20598

MODEL NO.	"L"	"D"	P/N
IA.753S	36	.046	20682
IAI.54S	48	.090	20847
IAI.55S	60	.090	2I204
IAI2S	24	.062	I7390
IAI3S	36	.062	I7290
IAI5S	60	.062	I729I
IAI6S	72	.062	I7293
IA.446S	72	.027	9II50

NOTES:
1. ALL DIMENSIONS ARE MILLIMETERS [INCHES] UNLESS OTHERWISE NOTED.
2. REFER TO "www.bannerengineering.com" FOR ADDITIONAL DATA AND SPECIFICATIONS.

NOTES:

1. 'M600' SUFFIX INDICATES THAT FIBERS POTTED ON ANGLED END WITH EPOXY THAT OPERATES IN MAX. TEMPERATURES OF 600°F.

This drawing is the property of BANNER ENGINEERING CORP. Any use or reproduction, in any form, without prior written permission of Banner is prohibited.
© 2015 Banner Engineering Corp.

THIRD ANGLE PROJECTION

BANNER ENGINEERING CORP.
www.bannerengineering.com

TITLE

IA2 SERIES SS TERMINATED

SIZE	DRAWING NO.	REV.
B	I6I9I0	A
SCALE 2:1	SHEET 2 OF 2	

CREO