MODEL NO.	"L"	P/N
PBAT46UTA-VL	2000	93059
PBAT43UTA-VL	1000	93058

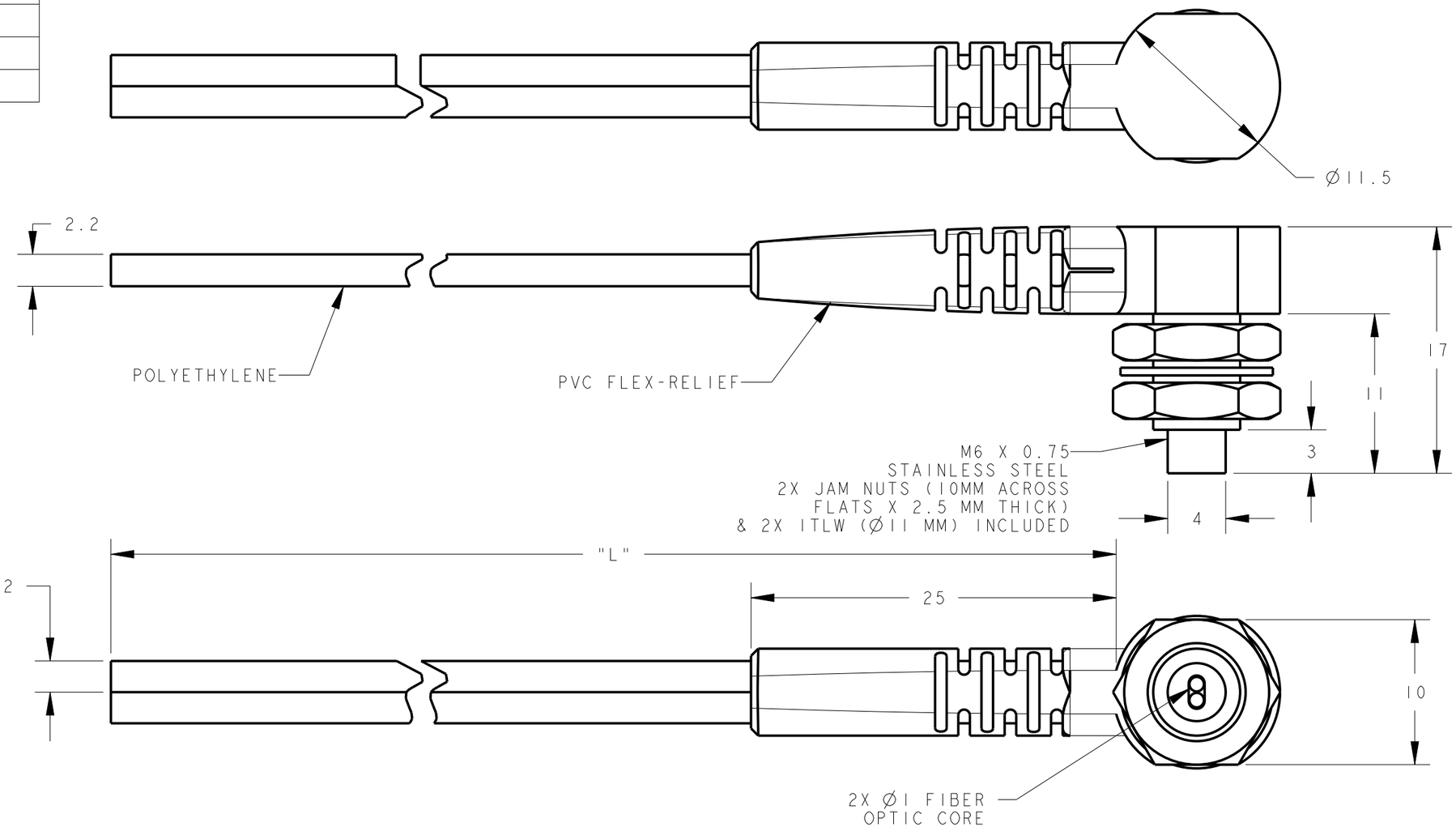

NOTES:

1. OPERATING TEMPERATURE -55°C ~ +70°C.
2. MINIMUM BEND RADIUS R25.

NOTES:
1. ALL DIMENSIONS ARE MILLIMETERS [INCHES] UNLESS OTHERWISE NOTED.

This drawing is the property of BANNER ENGINEERING CORP. and is proprietary in general and in detail. Its contents shall not be revealed to outside parties without written consent of BANNER.

THIRD ANGLE PROJECTION

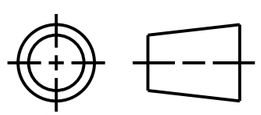

BANNER ENGINEERING CORP.
P.O. BOX 9414
MINNEAPOLIS, MN 55440

TITLE

PBAT4 SBR VANTAGE LINE SERIES UNTERMINATED

SIZE	DRAWING NO.	REV.
B	182476	A
SCALE 3:1		SHEET 1 OF 1

PRO/E

ПРОМЭЛЕКТРОНИКА/ sales@prom-elec.com