Features



- Rugged, compact multi-color indicators in several package types
- Built-in flashing and strobing capability
- High intensity models for outdoor applications
- Fully encapsulated IP67/IP69K construction
- Modbus RTU communication minimizes the cabling requirements

Models	Indicator Type	Picture	Colors	Connection
K50LGRYS1Q	Standard Domed		Green, Red, Yellow	Integral 4-pin M12 male quick-disconnect connector
K50LGRYS1QP				150 mm (6 in) PVC-jacketed cable with a 4-pin M12 male quick-disconnect connector
K50LDGRYS1Q	Daylight Visible			Integral 4-pin M12 male quick-disconnect connector
K50LDGRYS1QP				150 mm (6 in) PVC-jacketed cable with a 4-pin M12 male quick-disconnect connector
K50BLGRYS1Q	Beacon (Perimeter)			Integral 4-pin M12 male quick-disconnect connector
K50BLGRYS1QP				150 mm (6 in) PVC-jacketed cable with a 4-pin M12 male quick-disconnect connector
K50BCLGRYS1Q	Beacon (Perimeter and Center)			Integral 4-pin M12 male quick-disconnect connector
K50BCLGRYS1QP				150 mm (6 in) PVC-jacketed cable with a 4-pin M12 male quick-disconnect connector

Wiring

4-pin M12 Quick-Disconnect Connector (Male)	Pins	Wire Color	Sensor Connection
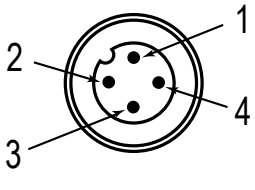	1	Brown	Power IN (+), 12 V DC to 30 V DC
	2	White	RS-485 +
	3	Blue	Ground (-)
	4	Black	RS-485 (-)

- For cables, use Turck's BL ident® cables or their equivalent. For example:
  - RK 4.5T-2-RS 4.5T/S2501 2 meter double-ended male/female
  - RK 4.5T-1-RS 4.5T/S2501 1 meter double-ended male/female
  - RK 4.5T-2/S2501 single-ended 2 meter female
- For tees, use Turck RSC 2RKC 57
- For terminators, use Banner model EZL-RTM-M or EZL-RTM-F

Original Instructions
10-Jun-25

© Banner Engineering Corp. All rights reserved.
www.bannerengineering.com

183980
p/n: 183980 Rev. C

ПРОМЭЛЕКТРОНИКА/ sales@prom-elec.com

Typical Installation

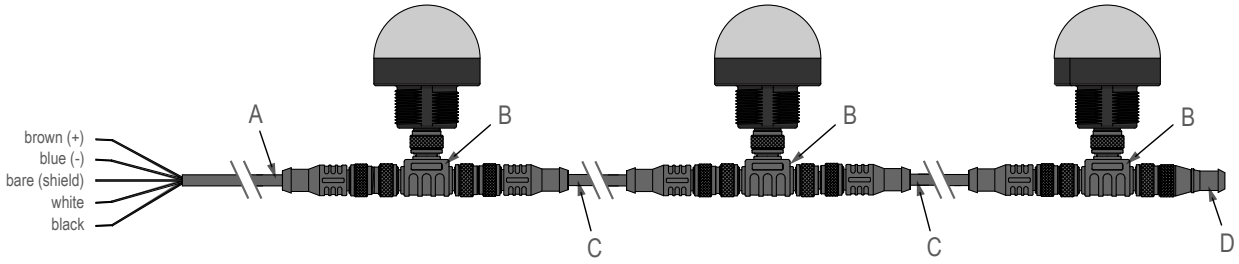

A	Single-ended cable
B	Tee
C	Double-ended cable
D	Terminator. Contains a 120 Ohm termination resistor connected across pins 2 and 4. Use the terminator for long cables or long lines of cascaded units to prevent signal reflections from occurring on the communication lines.

5-pin M12 Quick-Disconnect Connector (Male)	Pin	Wire Color
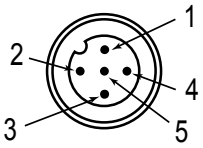	1	Brown
	2	White
	3	Blue
	4	Black
	5	Bare (Shield). Connect the shield to ground at the power supply connection.

Modbus RTU Registers

The EZ-LIGHT uses the holding registers table for providing read/write access to configuration data. The holding registers are defined in the 40000-49999 address range.

The input registers table is used for providing read-only access to system status data. The input registers are defined in the 30000-39999 address range. **EZ-LIGHT employs a direct addressing scheme.** For example, the input register at address 30000 is accessed by reading address 30000 (0x7530) directly; the starting address is not an offset.

Supported Modbus RTU Functions

Functions	Output Status
03	Reading holding registers
04	Read input registers
06	Write single registers
08	See Diagnostics, Function 8 (0x08) for supported commands.
16 (0x10)	Write multiple registers
23 (0x17)	Read/write multiple registers

Holding Registers

Address	Description	Holding Register Representation
40001	Modbus slave address	1 (default) through 247
40002	Baud	0 = 9.6k 1 = 19.2k (default) 2 = 38.4k

Continued on page 3

© Banner Engineering Corp. All rights reserved.
www.bannerengineering.com

Continued from page 2

Address	Description	Holding Register Representation
40003	Parity	0 = even (default) 1 = odd 2 = none
40004	Stop bits	1 = 1 stop bit (default) 2 = 2 stop bits
40005	Configuration Select	0 = No selectable configuration 1 = Solid light configuration 183564 2 = Flashing light configuration 183563 3 = Strobe light configuration 183565
40006	Modbus Settings Policy	0 = Apply After Power Cycle (default) 1 = Apply After Write
40100	Color 1 Register	0 = Color Inactive (power on value) 1 = Color Active
40101	Color 2 Register	0 = Color Inactive (power on value) 1 = Color Active
40102	Color 3 Register	0 = Color Inactive (power on value) 1 = Color Active

Solid Light Configuration 183564

The three colors are solid. Color 2 overrides color 1 and color 3 overrides colors 1 and 2.

Input Action			
Color 1	Color 2	Color 3	LED Function
Not active	Not active	Not active	Light off
Active	Not active	Not active	Green light on
Not active	Active	Not active	Red light on
Not active	Not active	Active	Yellow light on
Active	Active	Not active	Red light on
Active	Not active	Active	Yellow light on
Not active	Active	Active	Yellow light on
Active	Active	Active	Yellow light on

Flashing at 1.5 Hz, 50% Duty Cycle Configuration 183563

The three colors are flashing. Color 2 overrides color 1 and color 3 overrides colors 1 and 2.

Input Action			
Color 1	Color 2	Color 3	LED Function
Not active	Not active	Not active	Light off
Active	Not active	Not active	Green flashing
Not active	Active	Not active	Red flashing
Not active	Not active	Active	Yellow flashing
Active	Active	Not active	Red flashing
Active	Not active	Active	Yellow flashing
Not active	Active	Active	Yellow flashing
Active	Active	Active	Yellow flashing

© Banner Engineering Corp. All rights reserved.
www.bannerengineering.com

Strobe at 2 Hz, 25% Duty Cycle (100 ms ON, 400 ms OFF) Configuration 183565

The three colors strobe. Color 2 overrides color 1 and color 3 overrides colors 1 and 2.

Input Action			
Color 1	**Color 2**	**Color 3**	**LED Function**
Not active	Not active	Not active	Light off
Active	Not active	Not active	Green strobe
Not active	Active	Not active	Red strobe
Not active	Not active	Active	Yellow strobe
Active	Active	Not active	Red strobe
Active	Not active	Active	Yellow strobe
Not active	Active	Active	Yellow strobe
Active	Active	Active	Yellow strobe

Input Registers

The following information registers (31000–31022) must be read as a block, they cannot be read as single registers.

Address	Description	Input Register Representation
31000	Low word firmware part number	Example: 0x0002A734 (hex) = 173876 (dec)
31001	High word firmware part number	High word=0x0002; Low word = 0xA734
31002	Firmware version	Bits 7–4 = Major Version Bits 3–0 = Minor Version Example:0x0012 is version 1.2
31003	Build number	0–0xFFFF (hex) = 0–65535 (dec)
31004	Low word model number	Example: 0x0002A734 (hex) = 173876 (dec)
31005	High word model number	High word = 0x0002; Low word = 0xA734
31006	Model version	Bits 7–4 = Major Version Bits 3–0 = Minor Version Example: 0x0012 is version 1.2
31007	Low word configuration number	Example: 0x0002CD0B (hex) = 183563 (dec)
31008	High word configuration number	High word = 0x0002; Low word = CD0B
31009	Configuration version	Bits 7–4 = Major Version Bits 3–0 = Minor Version Example: 0x0012 is version 1.2
31013–31013	Date code, 8 bytes	
31014	Low Word Flash Config 1 Part Number	Example: 0x0002CD0C (hex) = 183564 (dec)
31015	High Word Flash Config 1 Part Number	High word = 0x0002; Low word = 0xCD0C 0xFFFFFFFF (hex) = No flash configuration
31016	Flash Config 1 Version	Bits 7–4 = Major Version Bits 3–0 = Minor Version 0x00FF = No flash version
31017	Low Word Flash Config 2 Part Number	Example: 0x0002CD0B (hex) =183563 (dec)
31018	High Word Flash Config 2 Part Number	High word = 0x0002; Low word = 0xCD0B 0xFFFFFFFF (hex) = No flash configuration

Continued on page 5

© Banner Engineering Corp. All rights reserved.
www.bannerengineering.com

Continued from page 4

Address	Description	Input Register Representation
31019	Flash Config 2 Version	Bits 7–4 = Major Version Bits 3–0 = Minor Version 0x00FF = No flash version
31020	Low Word Flash Config 3 Part Number	Example: 0x0002CD0D (hex) = 183565 (dec) High word = 0x0002; Low word = 0xCD0D 0xFFFFFFFF (hex) = No flash configuration
31021	High Word Flash Config 3 Part Number	
31022	Flash Config 3 Version	Bits 7–4 = Major Version Bits 3–0 = Minor Version 0x00FF (hex) = No flash version
32000	Bus Message Count	Returns same value as Diagnostic Function sub-function 11 (0x0B)
32001	Bus Communication Error Count	Returns same value as Diagnostic Function sub-function 12 (0x0C)
32002	Bus Exception Error Count	Returns same value as Diagnostic Function sub-function 13 (0x0D)
32003	Server Message Count	Returns same value as Diagnostic Function sub-function 14 (0x0E)
32004	Server NAK Count	Returns same value as Diagnostic Function sub-function 16 (0x10)
32005	Bus Character Overrun Count	Returns same value as Diagnostic Function sub-function 18 (0x12)
32006	Buffer Overrun Count	Returns the count of the number of times that a buffer overrun has occurred.

Diagnostics, Function 8 (0x08)

Subfunction	Description	
0	Return Query Data	
1	Restart Communications Option	Not supported
2	Return Diagnostic Register	Returns value of 0, any other value is an internal error condition
10 (0x0A)	Clear Counters and Diagnostic Register	
11 (0x0B)	Return Bus Message Count	
12 (0x0C)	Return Bus Communication Error Count	
13 (0x0D)	Return Bus Exception Error Count	
14 (0x0E)	Return Server Message Count	
15 (0x0F)	Return Server No Response Count	Not supported
16 (0X10)	Return Server NAK Count	
17 (0X11)	Return Server Busy Count	Not supported
18 (0x12)	Return Bus Character Overrun Count	
20 (0x14)	Clear Overrun Counter and Flag	

Example Commands and Responses

For these examples, the slave address is 1.

Write Color 1 Active

Master	01109CA4000102000122BD	
Response	01109CA400016E7A	

Write Color 1 Inactive

Master	01109CA40001020000E37D	
Response	01109CA400016E7A	

© Banner Engineering Corp. All rights reserved.
www.bannerengineering.com

Read Device Status Registers

Master	0104753100023A08	Command to read both output and sensor status registers
Possible Responses	01040400000000FB84	Output Inactive, button not pressed
	01040400100016B84	Output Active, button pressed
	01040400010000AA44	Output Active, button not pressed

Write Configuration Registers

Master	01109C4100030600010001000100001BC3	Write three registers: Slave address 1, 19200 baud, Even parity
Response	01109C410003FE4C	

Read Configuration Registers

Master	01039C4100037B8F	Command to read all three configuration registers
Response	0103060001000100004D75	Response with slave address 1, 19200 baud, even parity

Read Information Registers

Master	010479180017295F	Command to read all info registers
Response	01042EA7340002001000026D4300010010CFE4000200106AF319E27D1240E4C7AA00020010CE8400020010CFE400020010C652	

Specifications

Supply Voltage and Current

12 V DC to 30 V DC

K50L 3-Color models: 70 mA at 12 V DC; 55 mA at 30 V DC

K50LD 3-Color models: 110 mA at 12 V DC; 70 mA at 30 V DC

K50BL 3-Color models: 85 mA at 12 V DC; 60 mA at 30 V DC

K50BCL 3-Color models: 110 mA at 12 V DC; 70 mA at 30 V DC

Supply Protection Circuitry

Protected against reverse polarity and transient voltages

Environmental Rating

IP67 and IP69K per ISO 20653

Operating Conditions

–40 °C to +50 °C (–40 °F to +122 °F)

90% at +50 °C maximum relative humidity (non-condensing)

Storage: –40 °C to +70 °C (–40 °F to +158 °F)

Communication

Interface: RS-485 Serial

Baud Rates: 9.6k, 19.2k (default), or 38.4k

Data format: 8 data bits, no parity (default), 1 stop bit (even or odd parity available)

Protocol: Modbus RTU

Construction

Housing: polycarbonate

Translucent dome: polycarbonate

Mounting Nut: PBT

Connections

Integral 4-pin M12 male quick-disconnect connector or 150 mm (6 in) PVC-jacketed cable with a 4-pin M12 male quick-disconnect connector

Vibration and Mechanical Shock

All models meet MIL-STD-202F, Method 201A (Vibration: 10 Hz to 60 Hz maximum, 0.06 inch (1.52 mm) double amplitude, 10G maximum acceleration) requirements. Also meets IEC 60947-5-2 (Shock: 30G 11 ms duration, half sine wave) requirements.

Light Intensity

Color	Wavelength (nm)	Typical Intensity (Lumen)			
		K50L	K50LD	K50BL	K50BCL
Green	525	29	69	50	58
Red	625	13	27	20	23
Yellow	590	10	13	11	12

Certifications

CE

Banner Engineering BV
Park Lane, Culliganlaan 2F bus 3
1831 Diegem, BELGIUM

FCC Part 15 Class B for Unintentional Radiators

(Part 15.105(b)) This equipment has been tested and found to comply with the limits for a Class B digital device, pursuant to part 15 of the FCC Rules. These limits are designed to provide reasonable protection against harmful interference in a residential installation. This equipment generates, uses, and can radiate radio frequency energy and, if not installed and used in accordance with the instructions, may cause harmful interference to radio communications. However, there is no guarantee that interference will not occur in a particular installation. If this equipment does cause harmful interference to radio or television reception, which can be determined by turning the equipment off and on, the user is encouraged to try to correct the interference by one or more of the following measures:

- Reorient or relocate the receiving antenna.
- Increase the separation between the equipment and receiver.
- Connect the equipment into an outlet on a circuit different from that to which the receiver is connected.
- Consult the dealer or an experienced radio/TV technician for help.

(Part 15.21) Any changes or modifications not expressly approved by the party responsible for compliance could void the user's authority to operate this equipment.

© Banner Engineering Corp. All rights reserved.

Industry Canada ICES-003(B)

This device complies with CAN ICES-3 (B)/NMB-3(B). Operation is subject to the following two conditions: 1) This device may not cause harmful interference; and 2) This device must accept any interference received, including interference that may cause undesired operation.

Cet appareil est conforme à la norme NMB-3(B). Le fonctionnement est soumis aux deux conditions suivantes : (1) ce dispositif ne peut pas occasionner d'interférences, et (2) il doit tolérer toute interférence, y compris celles susceptibles de provoquer un fonctionnement non souhaité du dispositif.

Dimensions

All measurements are listed in millimeters [inches], unless noted otherwise. The measurements provided are subject to change.

K50BL and BCL Models

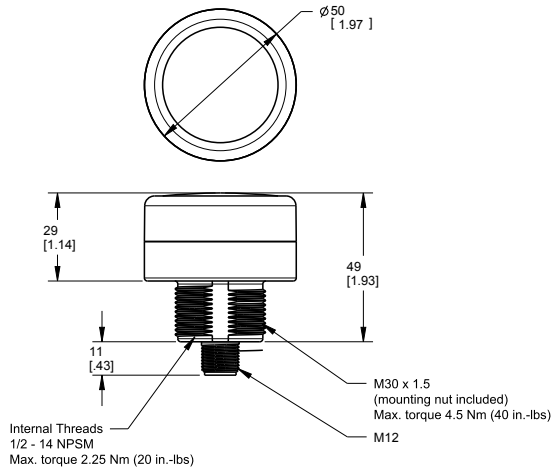

K50L Models

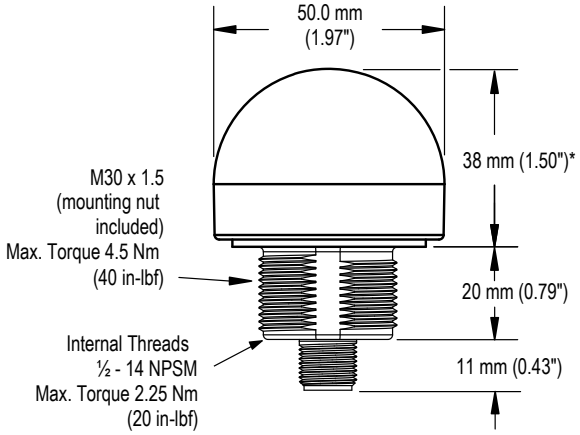

K50LD Models

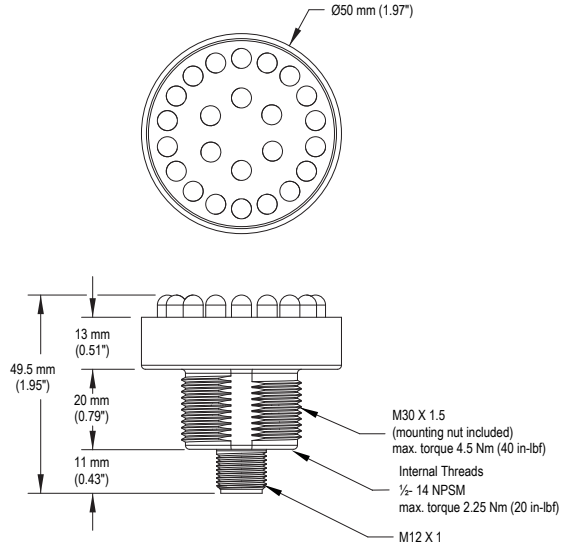

Banner Engineering Corp Limited Warranty

Banner Engineering Corp. warrants its products to be free from defects in material and workmanship for one year following the date of shipment. Banner Engineering Corp. will repair or replace, free of charge, any product of its manufacture which, at the time it is returned to the factory, is found to have been defective during the warranty period. This warranty does not cover damage or liability for misuse, abuse, or the improper application or installation of the Banner product.

THIS LIMITED WARRANTY IS EXCLUSIVE AND IN LIEU OF ALL OTHER WARRANTIES WHETHER EXPRESS OR IMPLIED (INCLUDING, WITHOUT LIMITATION, ANY WARRANTY OF MERCHANTABILITY OR FITNESS FOR A PARTICULAR PURPOSE), AND WHETHER ARISING UNDER COURSE OF PERFORMANCE, COURSE OF DEALING OR TRADE USAGE.

© Banner Engineering Corp. All rights reserved.
www.bannerengineering.com

This Warranty is exclusive and limited to repair or, at the discretion of Banner Engineering Corp., replacement. **IN NO EVENT SHALL BANNER ENGINEERING CORP. BE LIABLE TO BUYER OR ANY OTHER PERSON OR ENTITY FOR ANY EXTRA COSTS, EXPENSES, LOSSES, LOSS OF PROFITS, OR ANY INCIDENTAL, CONSEQUENTIAL OR SPECIAL DAMAGES RESULTING FROM ANY PRODUCT DEFECT OR FROM THE USE OR INABILITY TO USE THE PRODUCT, WHETHER ARISING IN CONTRACT OR WARRANTY, STATUTE, TORT, STRICT LIABILITY, NEGLIGENCE, OR OTHERWISE.**

Banner Engineering Corp. reserves the right to change, modify or improve the design of the product without assuming any obligations or liabilities relating to any product previously manufactured by Banner Engineering Corp. Any misuse, abuse, or improper application or installation of this product or use of the product for personal protection applications when the product is identified as not intended for such purposes will void the product warranty. Any modifications to this product without prior express approval by Banner Engineering Corp will void the product warranties. All specifications published in this document are subject to change; Banner reserves the right to modify product specifications or update documentation at any time. Specifications and product information in English supersede that which is provided in any other language. For the most recent version of any documentation, refer to: www.bannerengineering.com.

For patent information, see www.bannerengineering.com/patents.

© Banner Engineering Corp. All rights reserved.
www.bannerengineering.com