MULTI-BEAM® 3- and 4-wire Logic Module

Datasheet

For MULTI-BEAM modular photoelectric sensors

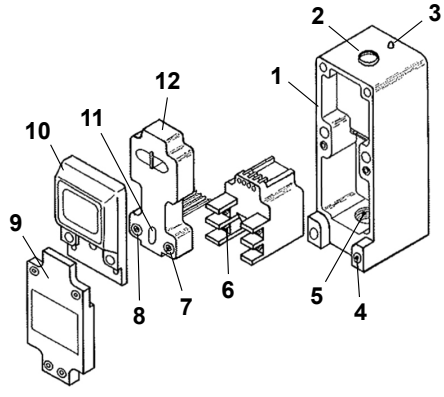

1. Scanner block housing
2. Sensitivity adjustment
3. Status/alignment indicator LED
4. Mounting hole
5. Conduit entrance
6. Wiring terminals on the power block
7. Logic timing adjustment
8. Logic timing adjustment
9. Lower cover, supplied with the scanner block
10. Upper cover (lens), supplied with the scanner block
11. Light/dark operate select
12. Logic module

MULTI-BEAM modular components (scanner block, power block, and logic module) are all purchased separately.

WARNING:

- **Do not use this device for personnel protection**
- Using this device for personnel protection could result in serious injury or death.
- This device does not include the self-checking redundant circuitry necessary to allow its use in personnel safety applications. A device failure or malfunction can cause either an energized (on) or de-energized (off) output condition.

Models

In the table below, the signal represents the light condition (in LIGHT operate) or the dark condition (in DARK operate), and the output represents the energized condition of the solid-state output switch (power block). Delay refers to the time delay before the output operates, and hold refers to the time that the output remains on after the event has occurred.

Model	Function	Description of Logic
LM1	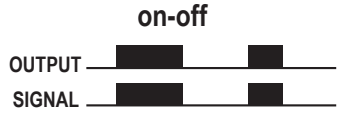	LM1 is an on-off logic modules that causes the power block output to follow the action of the scanner block: when the scanner block sees a LIGHT signal, the output is energized; when the scanner block sees a DARK signal, the output is de-energized. This is LIGHT operate mode. If the application calls for DARK operate mode, the LM1 may be used with normally-closed power blocks, such as PBAQ or PBT2.
LM2	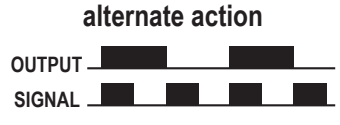	The LM2 provides flip-flop or toggling action of the power block output, such that each time the scanner block changes from a DARK state to a LIGHT state, the output changes state. The output remains in the last state until another change occurs. Some example applications for the LM2 are: • Operating a diverter gate that splits a production line into two lines • Operating room lighting by breaking a photoelectric beam ◦ If the lights are OFF, breaking the beam turns them ON ◦ If the lights are ON, breaking the beam turns them OFF
LM3	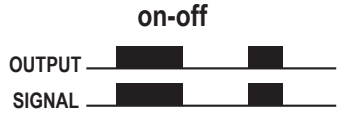	The LM3 is an on-off logic module that has the ability to be programmed for either LIGHT operate or DARK operate. It comes with a jumper wire installed: with the jumper in place, the output is DARK operated; with the jumper removed, the output is LIGHT operated. The LM3 is the most commonly used logic module when no timing function is desired, particularly if it is not known at the time of ordering which operate mode (LIGHT or DARK) will be needed.
LM4-2	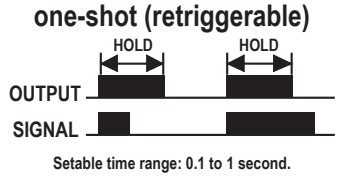	The LM4-2 provides a one-shot (or single-shot) output pulse each time there is a transition from LIGHT to DARK (jumper installed) or from DARK to LIGHT (jumper removed). The output pulse time range is from 0.01 seconds to 1 second. The duration of the pulse is independent of the duration of the input signal. The timing of the LM4-2 restarts each time that the input signal is removed and then reapplied. This is a retriggerable one shot. This feature may be applied to some rate sensing applications (use LM6-1 for true rate sensing).
LM4-2NR	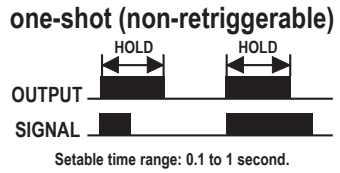	The LM4-2NR provides a one-shot (or single shot) output pulse each time there is a transition from LIGHT to DARK (jumper installed) or from DARK to LIGHT (jumper removed). The output pulse time range is from 0.01 seconds to 1 second. The duration of the pulse is independent of the duration of the input signal. The output pulse of the LM4-2NR must complete before it recognizes another input transition. This is called a non-retriggerable one shot, which sometimes offers an advantage in indexing or registration control applications where multiple input signals are possible during advance of the product.

ПРОМЭЛЕКТРОНИКА/ sales@prom-elec.com

Model	Function	Description of Logic
LM5	**on-delay** 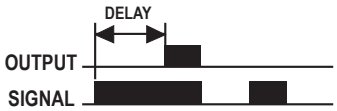 **Setable time range: 1.5 to 15 seconds.**	The LM5 is a true on-delay logic module. The input signal must be present for a predetermined length of time before the output is energized. The output then remains energized until the input signal is removed. If the input signal is not present for the predetermined time period, no output occurs. If the input signal is removed momentarily, and then reestablished, the timing function starts over again from the beginning. A LIGHT/DARK operate selection jumper wire is included. The standard time range is 0.15 seconds to 15 seconds (field adjustable), and other ranges are available. The LM5 is often used to detect jams on a conveyor line, where a beam broken for longer than a preset period of time implies a product jammed in the light beam.
LM5R	**off-delay** 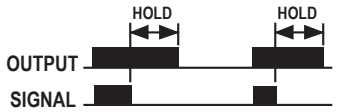 **Setable time range: 1.5 to 15 seconds.**	The LM5R is an off-delay logic module, similar to the LM5, except that timing begins on the trailing edge of the input signal. When the input occurs, the output is immediately energized; if the input is then removed, the output remains energized for the adjustable predetermined time period, then de-energizes. If the input is removed but then re-established while the timing is holding the output energized, a new output cycle is begun. The LM5R can be used to tell when no products have broken a beam for a predetermined length of time, therefore indicating a jam or an empty reservoir upstream. A LIGHT/DARK operate selection jumper wire is included. Timing range is 0.15 seconds to 15 seconds, and optional ranges are available.
LM5-14	**on- & off-delay** 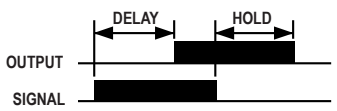 **Setable time range: 1.5 to 15 seconds.**	The LM5-14 combines the function of an on-delay and an off-delay into one logic module. When the signal is present for more than the on-delay time, the output energizes. The off-delay circuit is now active, and holds the output on even if the input signal disappears for short periods of time. If the input signal is gone for longer than the off-delay time, the output finally drops out. The most common use for the LM5-14 is to control fill level, for example in a bin: when the bin is full, a beam is broken, and a predetermined time later, the flow is stopped. After the level has fallen below the beam for a time, the flow is restarted. The time delays control the high and low levels. Each delay is independently adjustable for 0.15 seconds to 15 seconds.
LM5T	**limit timer**  **Setable time range: 1.5 to 15 seconds.**	The LM5T limit timer combines the function of on-off logic and on-delay logic. As long as the signal is present for only short periods of time, the output follows the action of the input signal. If the input signal is present for longer than the predetermined time, the output de-energizes. The output only re-energizes when the input signal is removed and then reestablished. Interval timers are used to operate loads which must not run continuously for long periods of time, such as intermittent duty solenoids and conveyor motors. The LM5T may be used to run a supermarket checkout conveyor, always bringing the product up to the scanner beam and then stopping the motor. When the last item is removed, the motor times out and stops. Timing range is 0.15 seconds to 15 seconds.
LM6-1	**rate sensor**  **Setable rate: 60 to 1200 pulses per minute.**	The LM6-1 is a true overspeed or underspeed sensing logic module that monitors signals from a scanner block and continuously calculates the time between input signals, and compares that time with the reference set by the HOLD potentiometer. A jumper allows the mode to be changed from overspeed (jumper installed) to underspeed (jumper removed). In the overspeed mode, the output will drop if the preset rate is exceeded. In the underspeed mode, the output remains energized until the input rate drops below the preset. The output will not pulse at low speeds, as retriggerable one-shots do. A DELAY adjustment allows the LM6-1 to ignore data for the first several seconds after power is applied, to permit the rate to accelerate to operating speed without false underspeed outputs. The sensing rate may be adjusted from 60 pulses to 1200 pulses per minute (0.05 seconds to 1 second per pulse), and the power-up inhibit from 1 second to 15 seconds.
LM8	**repeat cycler** 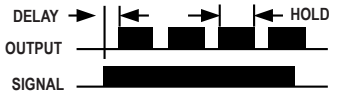 **Setable time range: 1.5 to 15 seconds.**	The LM8 is a repeat cycle timing module with independently adjustable delay and hold times. When an input signal is received from the scanner block, a delay period begins during which there is no output. If the signal remains, the delay period is followed by a hold period, during which the output is energized. If the signal still remains, the hold period times out, releasing the output and starting a new delay period. This sequence continues indefinitely until the input signal is removed. The LM8 is used in edgeguide and other registration control schemes where it is desired to pulse the correction motor to avoid overcorrection that might occur with a continuous output. Both time ranges are independently adjustable from 0.15 seconds to 15 seconds. **Note:** Use of the LIGHT/DARK operate jumper is reversed: remove for DARK, leave in place for LIGHT.
LM8-1	**delayed one-shot** 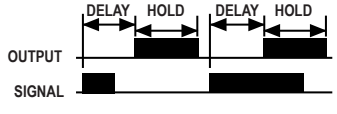 **Setable time range: 1.5 to 15 seconds.**	The LM8-1 is a delayed one-shot that functions like two individual one-shots, with the end of the first initiating the second. When an input signal occurs, a delay period is initiated, during which time the output is not energized. After the delay, the output is energized for the hold period, then de-energized. No further action takes place unless the signal is removed and then reestablished. This sequence is independent of the duration of the input signal. The LM8-1 is frequently used to sense a product, and then act on that product a short time later when it is clear of the inspection station. An example might be to inspect cartons for open flaps, and to eject the faulty cartons when they have completely passed the inspection point. Both time ranges are adjustable from 0.15 seconds to 15 seconds.

Model	Function	Description of Logic
LM8A	**on-delay one-shot** DELAY HOLD OUTPUT SIGNAL **Setable time range: 1.5 to 15 seconds.**	The LM8A incorporates both a delay and a hold time, except that the delay is a true on-delay (this differs slightly from the LM8-1). If the input signal does not last for the total duration of the delay time, no output action occurs. If the delay time passes, the one-shot output occurs, regardless of what happens to the input signal. Removing the input signal and reapplying it begins a new cycle. The LM8A is used to eject a part that has remained in the sensor beam longer than the delay time (for instance, a jammed part). Both time ranges are independently adjustable from 0.15 seconds to 15 seconds. **Note:** Use of the LIGHT/DARK operate jumper is reversed: remove for DARK, leave in place for LIGHT.
LM10	**÷10 counter** OUTPUT SIGNAL	The LM10 is a fixed-count divide-by-ten logic module, with neither timing nor LIGHT/DARK operate functions. When power is first applied, the output is OFF. With each dark-to-light transition, the LM10 enters one count in its memory. After five counts, the output is energized, and it remains energized until the tenth count. It then de-energizes, and the sequence continues. The LM10 is intended for product counting applications using programmable logic controllers (PLC) or computers, where the scan time of the input section of the controller is too slow to permit catching high speed count rates. It may also be used with electromechanical totalizers, which suffer from this same slow response. In operation, the registered count must be multiplied by ten to get the true count (ambiguity of five).
LMT Test Logic		LMT is a plug-in test logic module for use when troubleshooting MULTI-BEAM sensors. It contains LED indicator lights in place of the timing potentiometers and a miniature switch in place of the LIGHT/DARK operate jumper. The indicator lights display the operation of the scanner block and power block to verify proper functioning. The switch permits manual operation of the load to verify the output switching circuit. The step-by-step testing procedure included with the LMT allows a MULTI-BEAM to be completely tested without removing it from the installation, and, if there is a faulty scanner block, power block, or logic module, the LMT will identify it.

Overview

A Banner MULTI-BEAM Sensor is a compact modular self-contained photoelectric switch consisting of three components: a scanner block, a power block, and a logic module.

The **scanner** block comprises the housing for the sensor and contains a complete modulated photoelectric amplifier, the emitter and receiver optoelements and lenses, and space for the other modules.

The **power** block module provides the interface between the scanner block and the external circuit. It contains a power supply for the MULTI-BEAM plus a switching device (except in emitter-only power blocks) to interface the sensor to the circuit to be controlled.

The **logic** module interconnects the power block and scanner block both electrically and mechanically. It provides the desired timing logic function (if any) plus the ability to program the output for either light- or dark-operate.

The emitters of MULTI-BEAM opposed mode emitter/receiver pairs do not require a logic module. Emitter scanner blocks are supplied with a blade-pin to interconnect the scanner block and power block. Power block and logic modules are purchased separately. This modular design, with field-replaceable power block and logic modules, permits a large variety of sensor configurations, resulting in exactly the right sensor for any photoelectric application.

Logic Modules

The logic module interconnects the power block and scanner block both electrically and mechanically using a unique blade-and-socket connector concept. It also provides the LIGHT/DARK operate function (except in the LM1) and the timing functions, all of which are fully adjustable.

All MULTI-BEAM 3- and 4-wire logic modules are color-coded red, and are for use only in MULTI-BEAM 3- and 4-wire sensors. The time ranges specified for the logic modules are standard time ranges. For additional time ranges, see Modifications on page 3.

Figure 1. Functional Schematic

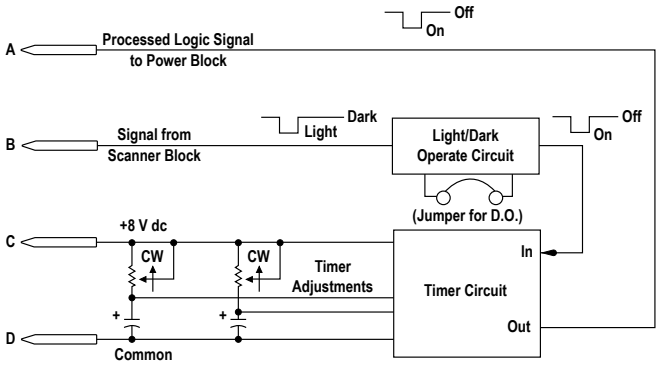

Modifications

The time ranges of any MULTI-BEAM logic module may be factory modified. Time range modification is often necessary to improve the setability of the timing function. Some time range modifications are carried in stock. Other time range modifications may be quoted. When ordering modified logic modules, add the letter M after the model number, followed by the maximum time desired (in seconds). The table below lists possible modifications.

Model Number Suffix	Setable Time Range
M.01	0.001 seconds to 0.01 seconds

Model Number Suffix	Setable Time Range
M.1	0.01 seconds to 0.1 seconds
M.5	0.05 seconds to 0.5 seconds
M1	0.1 seconds to 1 second
M5	0.5 seconds to 5 seconds
M15	1.5 seconds to 15 seconds

- **For logic modules with a single timing function**, specify the maximum desired time in seconds (for example, LM5M5 indicates an LM5 on-delay with the delay time adjustable up to 5 seconds).
- **For logic modules with dual timing functions**, specify the maximum desired delay and hold time in seconds (for example, LM5-14M1M5 indicates an LM5-14 on-off delay with an on-delay adjustable up to 1 second and an off-delay adjustable up to 5 seconds). Always specify both timing ranges, even if only one is to be modified.
- **For fixed timing**, the letter F should always be followed by the desired time, in seconds (for example, LM5MF1 would be an LM5 on-delay with a fixed 1 second delay time). For fractions of seconds, use decimal equivalents, such as LM5MF.5, LM5MF.01, etc.

Specifications

Construction
Molded PBT polyester housing; electronic components epoxy encapsulated
Gold plated blade connectors

Operating Temperature
–40 °C to +70 °C (–40 °F to +158 °F)

Timing Adjustment(s)
One or two single turn potentiometers with slot for blade-type screwdriver adjustment

Note: When turning time adjustments fully clockwise or counterclockwise, avoid excessive torque to prevent damage to potentiometers.

Timing Repeatability
±2% of maximum range under constant power supply and temperature conditions;
±5% of maximum range under all conditions of supply voltage and temperature

Response Time
Response time will be that for the scanner block plus the power block (plus the programmed delay if the logic includes a delay function)

Timing Range
Useful range is from maximum time down to 10% of maximum (for example, from 1 second to 0.1 seconds, or from 15 seconds to 1.5 seconds). When the timing potentiometer is set fully counterclockwise, time is approximately 1% of maximum.

Banner Engineering Corp. Limited Warranty

Banner Engineering Corp. warrants its products to be free from defects in material and workmanship for one year following the date of shipment. Banner Engineering Corp. will repair or replace, free of charge, any product of its manufacture which, at the time it is returned to the factory, is found to have been defective during the warranty period. This warranty does not cover damage or liability for misuse, abuse, or the improper application or installation of the Banner product.

THIS LIMITED WARRANTY IS EXCLUSIVE AND IN LIEU OF ALL OTHER WARRANTIES WHETHER EXPRESS OR IMPLIED (INCLUDING, WITHOUT LIMITATION, ANY WARRANTY OF MERCHANTABILITY OR FITNESS FOR A PARTICULAR PURPOSE), AND WHETHER ARISING UNDER COURSE OF PERFORMANCE, COURSE OF DEALING OR TRADE USAGE.

This Warranty is exclusive and limited to repair or, at the discretion of Banner Engineering Corp., replacement. **IN NO EVENT SHALL BANNER ENGINEERING CORP. BE LIABLE TO BUYER OR ANY OTHER PERSON OR ENTITY FOR ANY EXTRA COSTS, EXPENSES, LOSSES, LOSS OF PROFITS, OR ANY INCIDENTAL, CONSEQUENTIAL OR SPECIAL DAMAGES RESULTING FROM ANY PRODUCT DEFECT OR FROM THE USE OR INABILITY TO USE THE PRODUCT, WHETHER ARISING IN CONTRACT OR WARRANTY, STATUTE, TORT, STRICT LIABILITY, NEGLIGENCE, OR OTHERWISE.**

Banner Engineering Corp. reserves the right to change, modify or improve the design of the product without assuming any obligations or liabilities relating to any product previously manufactured by Banner Engineering Corp. Any misuse, abuse, or improper application or installation of this product or use of the product for personal protection applications when the product is identified as not intended for such purposes will void the product warranty. Any modifications to this product without prior express approval by Banner Engineering Corp will void the product warranties. All specifications published in this document are subject to change; Banner reserves the right to modify product specifications or update documentation at any time. Specifications and product information in English supersede that which is provided in any other language. For the most recent version of any documentation, refer to: www.bannerengineering.com.

For patent information, see www.bannerengineering.com/patents.

© Banner Engineering Corp. All rights reserved