Sure Cross® Antenna Kit BWA-ANTKIT-004

Antenna Kit BWA-ANTKIT-004

Low-gain directional antenna kit BWA-ANTKIT-004 includes a 6.5 dBd Yagi antenna.

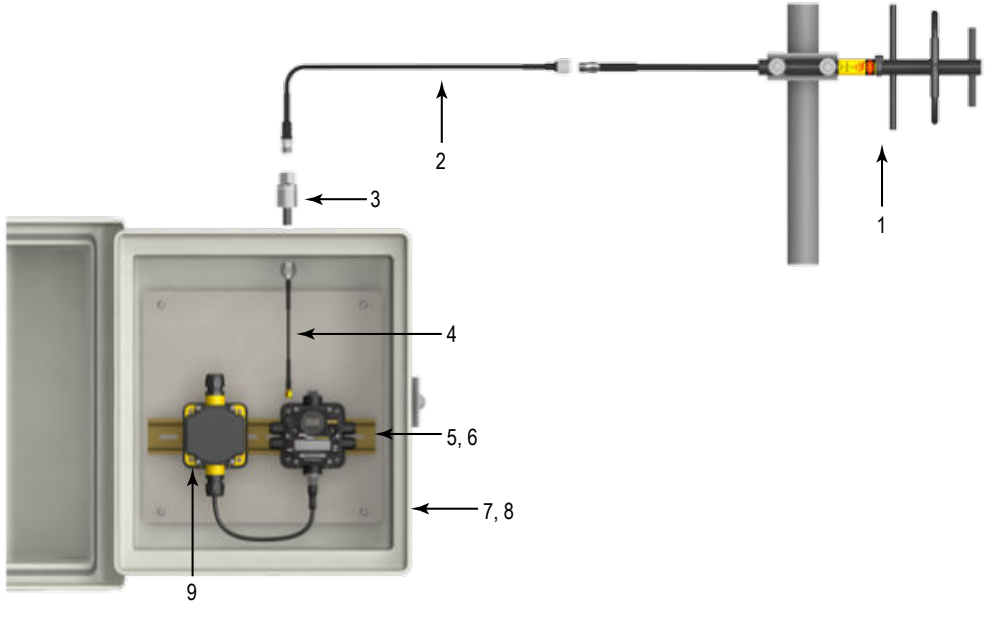

	Qty	Model	Description
1	1	BWA-9Y6-A	Antenna, Yagi, 902–928 MHz, 6.5 dBd, N-Type FEMALE
2	1	BWC-4MNFN6	LMR400 N-Type Male to N-Type Female, 6 m
3	1	BWC-PRC827-DC	Surge Suppressor, Bulkhead, N-Type Female to N-Type Male, DC blocking
4	1	BWC-1MRSMN05	LMR200, RP-SMA Male to RP-SMA Female Bulkhead, 0.5 m
5–9			Sold separately. Antenna kits do not include the radio, power supply, or enclosure components.

To create a weatherproof antenna connection, refer to the Sure Cross® DX80 Performance Instruction Manual (p/n 132607), the Sure Cross® Installation Guide (p/n 151317), or the Antenna Basics Guide (p/n 132113).

ПРОМЭЛЕКТРОНИКА/ sales@prom-elec.com