AT-FM-10K DUO-TOUCH Two-Hand Control Module Product Manual

Original Instructions
p/n: 64137 Rev. L
28-Oct-25
© Banner Engineering Corp. All rights reserved. www.bannerengineering.com

ПРОМЭЛЕКТРОНИКА/ sales@prom-elec.com

Contents

Chapter 1 Features 3
Important . . . Read This Before Proceeding! 3
US Application Standards 3
International/European Standards 3
EU/UK Declaration of Conformity (DoC) 4
Specifications 4
Dimensions 6

Chapter 2 Overview 7
LED Indicators 8
Module Operation 8
Part- and Full-Revolution Clutched Machinery 9

Chapter 3 Mechanical Installation 10
Heat Dissipation Considerations 10
Installation of Hand Controls 10
Requirements for Multiple-Operator Control 11
Two-Hand Control Safety Distance (Minimum Distance) 11
U.S. Applications 11
European Applications 12

Chapter 4 Electrical Installation 13
Connecting Power to the Safety Module 13
Connecting Input Switches (Hand Control Actuators) 13
Connecting to the Guarded Machine 15
External Device Monitoring 15
Overvoltage Category II and III Installations (EN 50178 and IEC 60664-1) 15

Chapter 5 Product Support and Maintenance 17
Initial Checkout Procedure 17
Daily Checkout Procedure 17
Semi-Annual Checkout Procedure 18
Repairs 18
Contact Us 19
Banner Engineering Corp Limited Warranty 19

© Banner Engineering Corp. All rights reserved. www.bannerengineering.com

Chapter Contents

Important . . . Read This Before Proceeding! 3
Specifications 4

Chapter 1 Features

DUO-TOUCH® SG for use with two actuating devices



- Diverse-redundant microcontrollers
- Monitors two Banner STB Self-Checking Optical Touch Buttons, or two mechanical push buttons
- Two redundant, forced-guided (mechanically linked) output contacts rated at 6 A
- Feedback (EDM) input monitors external machine control elements
- Five indicator LEDs for Power, Fault, Input 1, Input 2, and Output
- 24V AC/DC operation
- DIN-rail-mountable 22.5 mm-wide housing with removable terminal blocks
- 500 ms (maximum) simultaneity requirement for touch/push button operation

Important . . . Read This Before Proceeding!

It is the responsibility of the machine designer, controls engineer, machine builder, machine operator, and/or maintenance personnel or electrician to apply and maintain this device in full compliance with all applicable regulations and standards. The device can provide the required safeguarding function only if it is properly installed, properly operated, and properly maintained. This manual attempts to provide complete installation, operation, and maintenance instructions. *Reading the manual in its entirety is highly recommended to ensure proper understanding of the operation, installation, and maintenance.* Please direct any questions regarding the application or use of the device to Banner Engineering Corp..

The user is responsible for satisfying all local, state, and national laws, rules, codes, and regulations relating to the use of this product and its application. Banner Engineering Corp. has made every effort to provide complete application, installation, operation, and maintenance instructions. Please contact a Banner Applications Engineer with any questions regarding this product.

US Application Standards

ANSI B11.0 Safety of Machinery

ANSI B11.19 Performance Requirements for Risk Reduction Measures: Safeguarding and Other Means of Reducing Risk

NFPA 79 Electrical Standard for Industrial Machinery

International/European Standards

ISO 12100 Safety of Machinery – General Principles for Design – Risk Assessment and Risk Reduction

EN 60204-1 Electrical Equipment of Machines Part 1: General Requirements

ISO 13849-1 Safety of Machinery – Safety-Related Parts of Control Systems – Part 1: General Principles for Design

EN 13855 (EN 999) The Positioning of Protective Equipment in Respect to Approach Speeds of Parts of the Human Body

ISO 13851 Two-Hand Control Devices – Principles for Design and Selection

(also request a type C standard for your specific machinery.)

© Banner Engineering Corp. All rights reserved.
www.bannerengineering.com

EU/UK Declaration of Conformity (DoC)

Banner Engineering Corp. herewith declares that these products are in conformity with the provisions of the listed directives and all essential health and safety requirements have been met. For the complete DoC, please go to www.bannerengineering.com.

Product	Directive
AT-FM-10K Two-Hand Control Module	EU: Machinery Directive 2006/42/EC
	UKCA: Machinery (Safety) Regulation 2008

Representative in EU: Spiros Lachandidis, Managing Director, **Banner Engineering BV** Park Lane | Culliganlaan 2F bus 3 | 1831 Diegem, BELGIUM

Representative in UK: Tony Coghlan, Managing Director, **Turck Banner LTD** Blenheim House | Blenheim Court | Wickford, Essex SS11 8YT | Great Britain

Specifications

Supply Voltage

24 V DC ±15% at 150 mA (use a SELV-rated supply according to EN IEC 60950, NEC Class 2)

24 V AC ±15% at 150 mA, 50-60 Hz ±5% (use an NEC Class 2-rated transformer)

To comply with UL and CSA standards, the installation's isolated secondary power supply circuit must incorporate a method to limit the overvoltage to 0.8 kV. The use of a 500 mA slow blow fuse in series with the +24 V AC/DC is highly recommended. The AT-FM-10K does not contain an internal fuse.

Supply Protection Circuitry

Protected against transient voltages and reverse polarity

Operating Conditions

0 °C to +50 °C (+32 °F to +122 °F)

See "Heat Dissipation Considerations" on page 10

90% at +50 °C maximum relative humidity (non-condensing)

Overvoltage Category

Output relay contact voltage of 1 V to 150 V AC/DC: Category III

Output relay contact voltage of 151 V to 250 V AC/DC: Category II (Category III, if appropriate overvoltage reduction is provided, as described in this document.)

Output Response Time

35 milliseconds maximum

Input Requirements

Outputs from actuating devices must each be capable of switching 25 mA at 24V DC (nominal)

Status Indicators

Four green LED indicators: Power ON, Input 1 energized, Input 2 energized, Output

One red LED indicator: Fault

Construction

Polycarbonate housing. Rated IEC IP20

Terminal Torque

0.8 N·m (7 lb-in)

Maximum Wire Cross-Section for Connection

Each 1 × 2.5 mm^2 stranded ferruled

Each 1 × 4 mm^2 solid

Each 2 × 1.5 mm^2 stranded ferruled

Mounting

Mounts to standard 35 mm DIN rail track. Safety Module must be installed inside an enclosure rated NEMA 3 (IEC IP54), or better.

Simultaneity Monitoring Period

≤ 500 milliseconds

Pollution Degree

2

Vibration Resistance

10 Hz to 55 Hz at 0.35 mm displacement per IEC 60068-2-6

Safety Ratings

Category 4 PLe per EN ISO 13849-1; MTTFd = 100 years

SIL 3 per IEC 61508; PFHd = 1.54 x 10^{-9}

SIL CL 3 per IEC 62061

Type IIIc per EN ISO 13851 (when used with STBs or hard contacts)

Certifications

Banner Engineering BV
Park Lane, Culliganlaan 2F bus 3
1831 Diegem, BELGIUM

Turck Banner LTD Blenheim House
Blenheim Court
Wickford, Essex SS11 8YT
GREAT BRITAIN

c UL us LISTED Press Control 8N35 c UL us LISTED IND. CONT. EQ. 3NVF

© Banner Engineering Corp. All rights reserved.
www.bannerengineering.com

B10d Values

Voltage (V)	Current (A)	B10d
230 AC	2	100,000
230 AC	1	600,000
230 AC	0.5	1,300,000
24 DC	≤ 2	10,000,000

Output Configuration

Each normally open output channel is a series connection of contacts from two forced-guided (mechanically linked) relays, K1-K2.

Contacts: AgNi, 5 µm gold-plated

Low Current Rating: The 5 µm gold-plated contacts allow the switching of low current/low voltage. In these low-power applications, multiple contacts can also be switched in series (for example, dry switching). To preserve the gold plating on the contacts, do not exceed the following maximum values at any time:

	Minimum	Maximum
Voltage	1 V AC/DC	60 V
Current	5 mA AC/DC	300 mA
Power	5 mW (5 mVA)	7 W (7 VA)

High Current Rating: If higher loads must be switched through one or more of the contacts, the minimum and maximum values of the contact(s) changes to:

		Minimum	Maximum
c UL us LISTED Press Control 8N35	Voltage	15 V AC/DC	250 V AC / 24 V DC, 6 A resistive
	Current	30 mA AC/DC	——
	Power	0.45 W (0.45 VA)	——
CE	Voltage	15 V AC/DC	250 V AC / 24 V DC, 6 A resistive
	Current	30 mA AC/DC	IEC 60947-5-1; AC15: 230 V AC, 3 A; DC-13: 24 V DC, 2 A
	Power	0.45 W (0.45 VA)	——

Mechanical life: 20,000,000 operations

Electrical life (switching cycles of the output contacts, resistive load): 150,000 cycles at 900 VA; 1,000,000 cycles at 250 VA; 2,000,000 cycles at 150 VA; 5,000,000 cycles at 100 VA

© Banner Engineering Corp. All rights reserved.
www.bannerengineering.com

Dimensions

All measurements are listed in millimeters [inches], unless noted otherwise. The measurements provided are subject to change.

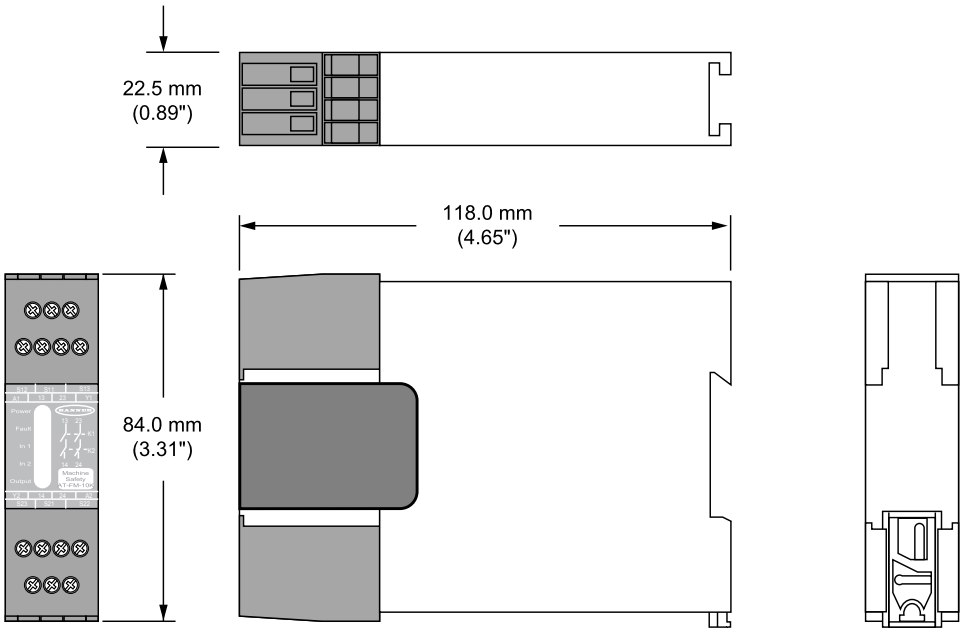

© Banner Engineering Corp. All rights reserved.
www.bannerengineering.com

Chapter Contents

LED Indicators 8
Module Operation 8
Part- and Full-Revolution Clutched Machinery 9

Chapter 2 Overview

A DUO-TOUCH SG Two-Hand Control Safety Module (the Module) may be used with:

- Two Banner STB Self-Checking Optical Touch Buttons, each with one normally open and one normally closed relay output contact, or
- Two Banner STB Self-Checking Optical Touch Buttons, each with two current-sourcing PNP outputs, or
- Two electro-mechanical push buttons, each with one normally open and one normally closed contact (Form C contact)

If the machine operator removes one or both hands from the actuating device(s), the Module relays de-energize, causing the output contacts to open. The relays will not re-energize until both actuating devices are deactivated and then simultaneously reactivated.

WARNING:

- **Use adequate point-of-operation guarding**
- Failure to properly guard hazardous machinery can result in a dangerous condition that could lead to serious injury or death.
- When properly installed, a two-hand control safety device provides protection only for the hands of the machine operator. It might be necessary to install additional safeguarding, such as safety light curtains, additional two-hand controls, and/or hard guards, to protect all individuals from hazardous machinery.

The Duo-Touch SG® Two-Hand Control Kit system complies with:

- Two-hand control and Control Reliability requirements per OSHA 29CFR1910.217, NFPA 79, and ANSI B11.19,
- Type IIIC requirements of ISO 13851 Safety of Machinery – Two-Hand Control Devices, and
- Safety-related applications up to Category 4 PL e, per EN ISO 13849-1 and SIL3 per IEC 61508 and EN 62061.

The Safety Module's output signal consists of two sets of redundant, forced-guided (mechanically linked) contacts (see "Electrical Installation" on page 13). Circuitry within the Safety Module monitors these internal contacts and prevents an output signal from occurring if a fault is detected. A feedback loop is offered for monitoring the status of the machine control elements.

© Banner Engineering Corp. All rights reserved.
www.bannerengineering.com

LED Indicators

Status indicators and terminal locations

	LED	ON	OFF	Flashing
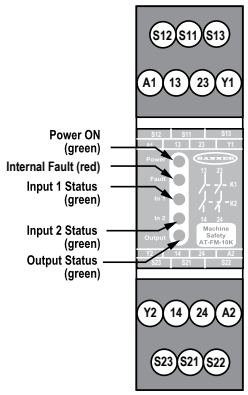	Power ON	Power is applied	No power	—
	Fault	Simultaneity is not met or External wiring fault	—	Internal fault condition is detected
	Input 1 Status and Input 2 Status	Touch button is activated	Button is not activated	External wiring fault is detected
	Output Status	Both relays (K1 and K2) are energized	—	Feedback error

Module Operation

CAUTION:

- **Anti-repeat control is not a function of this two-hand control safety module**
- Failure to follow these instructions could result in serious injury or death.
- The user of this device must provide a suitable means of accomplishing anti-repeat control for any single-stroke or single-cycle machine.

The Two-Hand Control Safety Module may be used as an initiation device for most powered machinery when machine cycling is controlled by a machine operator.

Using a two-hand control system makes the operator a hostage while the hazard is present, thus limiting or preventing exposure to the hazard. The two-hand control actuators must be located in a way that hazardous motion is completed or stopped before the operator can release one or both of the buttons and reach the hazard (see "Two-Hand Control Safety Distance (Minimum Distance)" on page 11).

The Safety Module's safety inputs are used to monitor the actuation of the hand controls to comply with the functionality of Type III requirements of NFPA 79 / EN 60204-1 and EN ISO 13851 (Type IIIc/Cat 4) and the requirements of NFPA 79 and ANSI B11.19 for two-hand control, which include:

- Concurrent (simultaneous) actuation by both hands within a 500 ms time frame
- Where this time limit is exceeded, a requirement that both hand controls must be released before operation is initiated
- Continuous actuation during hazardous condition
- Cessation of hazardous condition if either hand control was released
- Release and re-actuation of both hand controls to re-initiate the hazardous motion or condition (that is, anti-tie down)
- The appropriate performance level of the safety-related function (for example, Control Reliability, Category/ Performance Level, or SIL) as determined by a risk assessment or the applicable regulation and standards.

© Banner Engineering Corp. All rights reserved.
www.bannerengineering.com

Model AT-FM-10K timing logic

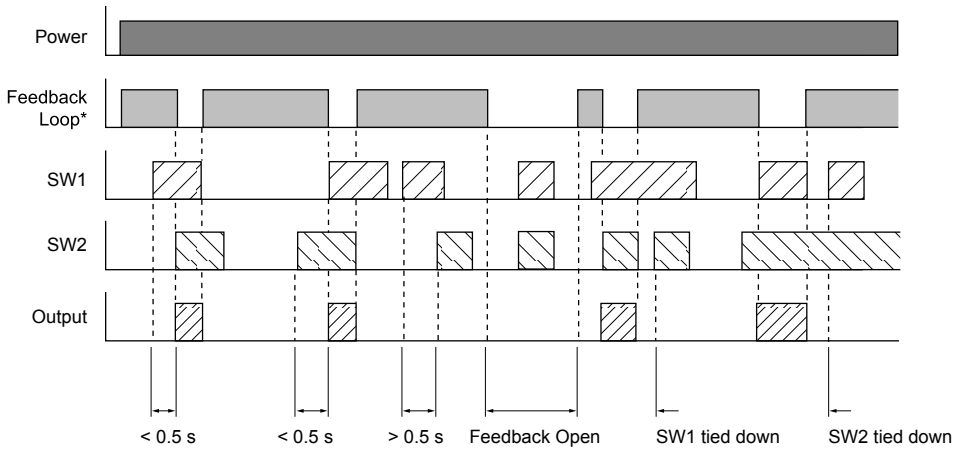

In addition, the Safety Module logic will not permit the safety outputs to turn ON when power is initially supplied and if the hand controls (actuators) are in their Run state (for example, both actuators tie-down). The hand controls must change to their Stop state and return to the Run state before the safety outputs can turn ON.

The actuating devices must be protected from accidental or unintended operation. This can be accomplished by their mounting position and/or through the use of protective shields such as rings, guards or shields; see "Mechanical Installation" on page 10.

Part- and Full-Revolution Clutched Machinery

When used on part-revolution clutched machinery that can be stopped at any point during the cycle, the Safety Module can be used for the following function types: inch (jog), single-stroke, or continuous (run).

When used on full-revolution clutched machinery (that cannot be stopped until the end of the cycle), the Safety Module is used to *initiate* the cycle and is known as a two-hand trip device.

In either situation, the hand controls must be safely located and protected from false operation (see "Mechanical Installation" on page 10 and "Two-Hand Control Safety Distance (Minimum Distance)" on page 11) and the Safety Module must be appropriately interfaced to the machine (see "Electrical Installation" on page 13).

When used in single-cycle or single-stroke mode, the machine control must provide an anti-repeat feature so that the operator must release the two-hand control actuators after each machine cycle, before a new cycle can be initiated.

> **NOTE:** Two-hand control and two-hand trip safeguarding protect ***only the operator's hands*** . Additional safeguarding (for example, additional two-hand controls) may be required. **Refer to the relevant standards for additional requirements.**

© Banner Engineering Corp. All rights reserved.
www.bannerengineering.com

Chapter Contents

Heat Dissipation Considerations 10
Installation of Hand Controls 10
Requirements for Multiple-Operator Control 11
Two-Hand Control Safety Distance (Minimum Distance) 11
U.S. Applications 11
European Applications 12

Chapter 3 Mechanical Installation

Install the Safety Module inside an enclosure rated NEMA 3 (IEC IP54), or better. It is not designed for exposed wiring. The Module mounts directly onto a standard 35 mm DIN rail.

Heat Dissipation Considerations

For reliable operation, ensure that the operating specifications are not exceeded. The enclosure must provide adequate heat dissipation, so that the air closely surrounding the Module does not exceed the maximum operating temperature stated in the "Specifications" on page 4. Methods to reduce heat build-up include venting, forced airflow (for example, exhaust fans), adequate enclosure exterior surface area, and spacing between modules and other sources of heat.

Installation of Hand Controls

CAUTION:

- **Avoid installing hand controls in contaminated environments**—Severe contamination or other environmental influences could cause a slow response or false on condition of mechanical or ergonomic buttons.
- A slow response or false on condition could result in exposure to a hazard.
- The environment in which hand controls are installed must not adversely affect the means of actuation.

CAUTION:

- **Install hand controls to prevent accidental actuation**
- It is not possible to completely protect the two-hand control system from defeat.
- OSHA regulations require the user to arrange and protect hand controls to minimize possibility of defeat or accidental actuation.

Each actuating device requires a normally open and a normally closed (for example, Form C or SPDT) hard contact, each capable of reliably conducting 25 mA at 24 V DC (nominal). For complementary PNP operation, model **STBVP.**. touch buttons must be used to ensure proper functionality.

Standards require that the actuating devices be mounted to protect them from accidental or unintentional operation. Use shields, covers, rings, collars, dividers, or similar protection to prevent accidental switch actuation and to discourage use of forearms or elbows. ANSI B11.19 and EN ISO 13851 include a detailed discussion of approaches to protection of hand controls.

The installation of the hand controls must also consider:

- Failure modes that would result in a short circuit, a broken spring(s), mechanical seizure, etc. that would result in not detecting the release of a hand control.
- Severe contamination or other environmental influences that may cause slow response when released or false ON condition of the hand control(s), for example, sticking of a mechanical linkage.

The hand controls must be arranged far enough apart so that the operator cannot operate both hand controls by the use of one arm. Typically, this distance is not less than 550 mm (21.7 inches) in a straight line, but using guards or alternate mounting arrangement can allow shorter distances, per ANSI B11.19 and EN ISO 13851. Arrange hand controls on a horizontal (or nearly horizontal) surface that is 1,100 mm (43.3 inches) above the floor for ergonomic purposes.

© Banner Engineering Corp. All rights reserved.
www.bannerengineering.com

Install activation devices so that they are protected to prevent defeat or inadvertent actuation (Banner STB Touch Buttons shown)

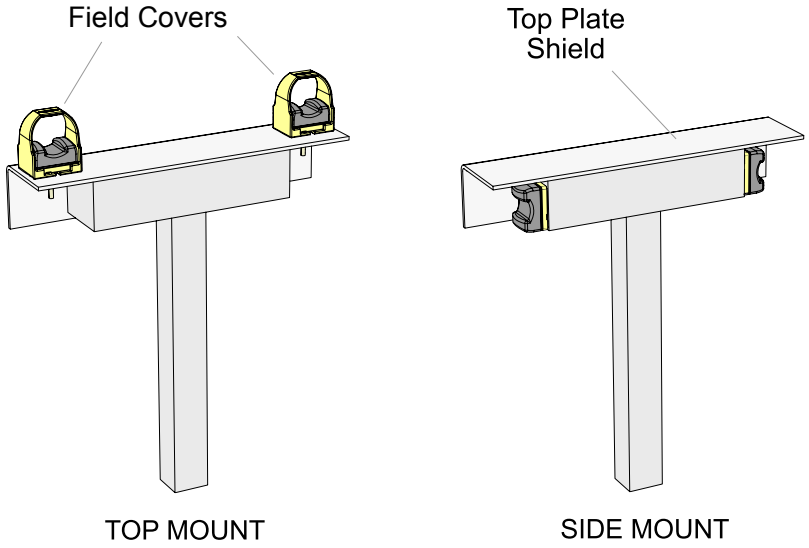

When installing the hand controls, consider ergonomic principles, in order to avoid unnecessary user fatigue. See EN ISO 13851 Two-Hand Control, ANSI B11.TR1 – Ergonomic Guidelines, and EN 894, Safety of Machinery – Ergonomic Requirements – Control Actuators for further information.

The figure shows two examples for mounting Banner's STB Touch Buttons. When mounted on top of the control bar, the protective field covers should be in place, as shown. For added protection, mount the devices sideways under and behind a protective hood, rather than on top of the bar, leaving the field covers off. This side mount reduces the possibility of the operator easily positioning and leaving an object in the path of the beam, intentionally bypassing the safeguard.

Requirements for Multiple-Operator Control

Standards have specified several conditions for situations where multiple operators work together to control one machine:

- Each operator must actuate his/her own pair of actuating devices, with all pairs of actuators active at one time, in order to initiate a machine cycle; the machine may not be allowed to operate until this condition is true
- The actuators all must be released between cycles
- The actuation and de-actuation of all workstations requiring two-hand control must be supervisable and must provide indication
- The clutch/brake control system must be designed so that the clutch cannot be actuated if all the operating workstations are bypassed

It is the user's responsibility to determine if this two-hand control system can be interfaced to the machine in a manner to satisfy all existing requirements for multiple-operator control.

Two-Hand Control Safety Distance (Minimum Distance)

Install all hand controls far enough away from the nearest hazard point that the operator cannot reach the hazard with a hand or other body part before the hazardous motion ceases. This is the separation distance (safety distance), and may be calculated as follows.

WARNING:

- **Mount hand controls at a safe distance from moving machine parts**
- Failure to establish and maintain the safety distance (minimum distance) could result in serious injury or death.
- Mount hand controls as determined by the applicable standard. The operator or other non-qualified persons must not be able to relocate the hand controls.

U.S. Applications

The Safety Distance formula, as provided in ANSI B11.19:

© Banner Engineering Corp. All rights reserved.
www.bannerengineering.com

Part-Revolution Clutch Machinery (the machine and its controls allow the machine to stop motion during the hazardous portion of the machine cycle)

$$D_s = K \times (T_s + T_r + T_h) + D_{pf}$$

For Full-Revolution Clutch Machinery (the machine and its controls are designed to complete a full machine cycle)

$$D_s = K \times (T_m + T_r + T_h) + D_{pf}$$

D_s

the Safety Distance (in inches)

K

the OSHA/ANSI recommended hand-speed constant (in inches per second), in most cases is calculated at 63 in/s, but may vary between 63 in/s to 100 in/s based on the application circumstances;

not a conclusive determination; consider all factors, including the physical ability of the operator, when determining the value of K to be used.

T_h

the response time of the slowest hand control from the time when a hand disengages that control until the switch opens;

T_h is usually insignificant for purely mechanical switches. However, T_h should be considered for safety distance calculation when using electronic or electromechanical (powered) hand controls.

For Banner Engineering Corp. Self-checking Touch Buttons (STBs), see the de-actuate time listed in the specification section of the STB Manual, p/n 64136.

T_m

the maximum time (in seconds) the machine takes to cease all motion after it has been tripped. For full revolution clutch presses with only one engaging point, T_m is equal to the time necessary for one and one-half revolutions of the crankshaft. For full revolution clutch presses with more than one engaging point, T_m is calculated as follows:

$$T_m = (1/2 + 1/N) \times T_{cy}$$

N = number of clutch engaging points per revolution

T_{cy} = time (in seconds) necessary to complete one revolution of the crankshaft

T_r

the response time of the safety monitoring device as measured from the time a stop signal from either hand control is received. For a Banner Engineering Corp. Safety Controller, the response time is obtained from the **Configuration Summary** tab in the Software.

T_s

the overall stop time of the machine (in seconds) from the initial stop signal to the final ceasing of all motion, including stop times of all relevant control elements and measured at maximum machine velocity.

T_s is usually measured by a stop-time measuring device. If the specified machine stop time is used, add at least 20% as a safety factor to account for brake system deterioration. If the stop-time of the two redundant machine control elements is unequal, the slower of the two times must be used for calculating the separation distance.

D_{pf}

Per ANSI B11.19, the adder to account for the distance that is possible for the individual to be reaching toward the hazard zone before a protective stop is initiated. For two-hand control applications where encroachment towards the hazard is not restricted, D_{pf} = 550 mm (21.65 in). When encroachment is obstructed (for example, shrouding the two-hand actuating controls, orientation of the work station, etc.), the reaching distance (d_{ds}) may be reduced to zero. D_{pf} is also known as "d_{ds}".

European Applications

The Minimum Distance Formula, as provided in EN 13855:

$$S = (K \times T) + C$$

S

the Minimum Distance (in millimeters)

K

the EN 13855 recommended hand-speed constant (in millimeters per second), in most cases is calculated at 1600 mm/s, but may vary between 1600 mm/s to 2500 mm/s based on the application circumstances;

not a conclusive determination; consider all factors, including the physical ability of the operator, when determining the value of K to be used.

T

the overall machine stopping response time (in seconds), from the physical initiation of the safety device to the final ceasing of all motion.

C

the added distance due to the depth penetration factor equals 250 mm, per EN 13855. ISO/DIS 13855:2022 increases the C factor (d_{ds}) to 550 mm. The EN 13855 **C** factor may be reduced to 0 if the risk of encroachment is eliminated, but the safety distance must always be 100 mm or greater.

© Banner Engineering Corp. All rights reserved.

Chapter Contents

Connecting Power to the Safety Module 13
Connecting Input Switches (Hand Control Actuators) 13
Connecting to the Guarded Machine 15
External Device Monitoring 15
Overvoltage Category II and III Installations (EN 50178 and IEC 60664-1) 15

Chapter 4 Electrical Installation

It is not possible to give exact wiring instructions for a Safety Module that interfaces to a multitude of machine control configurations. The following guidelines are general in nature.

The Safety Module has no delay function. Its output relay contacts open within 35 milliseconds after a safety input opens. This classifies the Safety Module as functional stop Category 0, as defined by NFPA 79 and IEC/EN 60204-1.

WARNING:

- **Determine the safety category**
- The design and installation of the safety devices and the means of interfacing of those devices could greatly affect the level of safety circuit integrity.
- Perform a risk assessment to determine the appropriate safety circuit integrity level or safety category, as described by ISO 13849-1, to ensure that the expected risk reduction is achieved and that all applicable regulations and standards are met.

WARNING:

- **Risk of electric shock**
- Use extreme caution to avoid electrical shock. Serious injury or death could result.
- Always disconnect power from the safety system (for example, device, module, interfacing, etc.), guarded machine, and/or the machine being controlled before making any connections or replacing any component. Lockout/tagout procedures might be required. Refer to OSHA 29CFR1910.147, ANSI Z244-1, or the applicable standard for controlling hazardous energy.
- Make no more connections to the device or system than are described in this manual. Electrical installation and wiring must be made by a Qualified Person[1] and must comply with the applicable electrical standards and wiring codes, such as the NEC (National Electrical Code), NFPA 79, or IEC 60204-1, and all applicable local standards and codes.

Connecting Power to the Safety Module

The Safety Module requires a 24 V AC/DC supply voltage (see "Specifications" on page 4). Use extreme caution when installing AC power. Use a minimum of 16 AWG to 18 AWG wire for power and output connections. Use a minimum of 20 AWG wire for all other terminal connections. A hand-operated supply disconnect and over-current protection (for example, a circuit breaker) must be provided per ANSI NFPA79 and IEC/EN60204-1.

Connecting Input Switches (Hand Control Actuators)

Connect the actuation devices to the Module as shown in the following wiring diagrams. SW1 and SW2 must both have normally open and normally closed output contacts, or two current-sourcing complementary outputs each, all capable of reliably switching 25 mA at 24 V DC (nominal). If hand controls have metal housings, the housings must be connected to protective earth ground.

If STB Touch Buttons with PNP outputs are used, the entire STB/AT-FM-10K system must be supplied with 24 V DC.
Electronic actuation devices, including STB Touch Buttons, must share the same voltage supply with the Safety Module.

[1] A person who, by possession of a recognized degree or certificate of professional training, or who, by extensive knowledge, training and experience, has successfully demonstrated the ability to solve problems relating to the subject matter and work.

© Banner Engineering Corp. All rights reserved.

WARNING:

- **Electronic hand controls cannot guarantee the state of their outputs at the time power is applied to them**
- Failure to power hand controls (such as optical touch buttons, capacitive touch buttons and similar devices) and the safety module from the same voltage source creates a potentially dangerous condition, which could result in serious injury or death.
- When electronic hand controls are used as input switches for a safety module, the hand controls and the safety module must be powered from the same voltage source. If power is applied to the safety module before power is applied to the electronic hand controls, an output from the safety module could result and could trigger machine motion.

Connection to two STB Touch Buttons with contact outputs

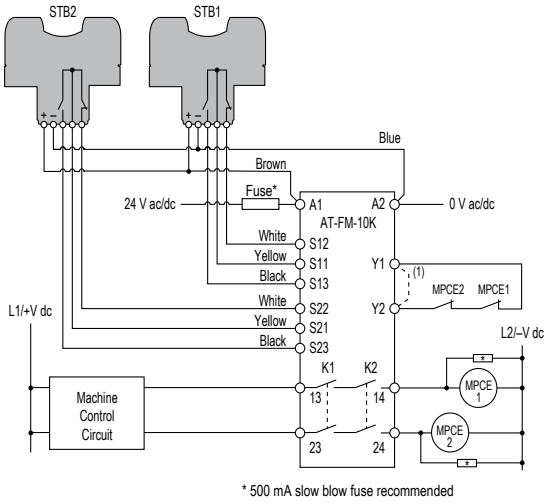

* 500 mA slow blow fuse recommended

Connection to two STB Touch Buttons with PNP (sourcing) outputs

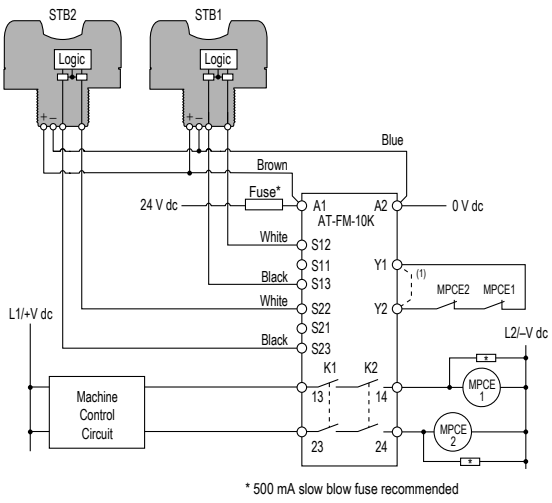

* 500 mA slow blow fuse recommended

WARNING:

- **Interfacing safety outputs**
- Failure to follow these instructions could result in serious injury or death.
- Never wire or interface an intermediate device (PLC, PES, PC) that can fail in such a manner that there is a loss of the safety stop command to the master primary control element(s).

Connection to two mechanical push buttons with contact outputs

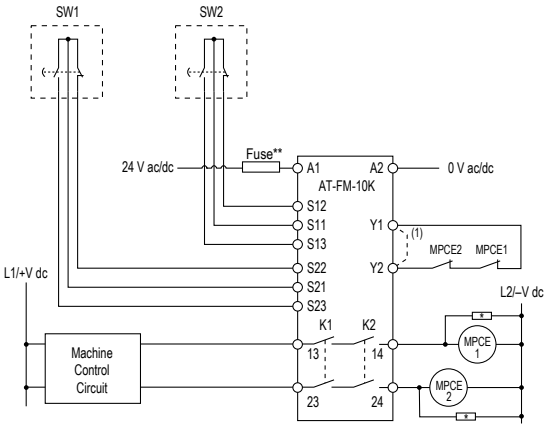

* Arc Suppressor – See Warning
(1) See Warning about Interfacing Safety Outputs
** 500 mA slow blow fuse recommended

© Banner Engineering Corp. All rights reserved.
www.bannerengineering.com

WARNING:
- **Properly install arc or transient suppressors**
- Failure to follow these instructions could result in serious injury or death.
- Install any suppressors as shown across the coils of the machine primary control elements. Do not install suppressors directly across the output contacts of the safety or interface module. In such a configuration, it is possible for suppressors to fail as a short circuit.

Connecting to the Guarded Machine

WARNING:
- **Interfacing master stop controls**
- Failure to follow these instructions could result in serious injury or death.
- Unless the same degree of safety is maintained, never wire an intermediate device(s) (PLC, PES, PC) between the safety module outputs and the master stop control element it switches such that a failure causes a loss of the safety stop command or the failure allows the safety function to be suspended, overridden, or defeated.
- When forced-guided, mechanically linked relays are added as intermediate switching devices, a normally closed (N.C.) forced-guided monitor contact from each relay must be added to the series feedback loop or properly wired external device monitoring channel.

The wiring diagrams show a generic connection of the Safety Module's redundant output contacts to machine primary control elements MPCE1 and MPCE2. An MPCE is defined as an electrically-powered element, external to the Safety Module, which directly controls the machine's normal operating cycle so that it is the last (in time) to operate when the cycle is either initiated or arrested. Some older machines offer only one MPCE; for such machines, it may be necessary to add a second MPCE to establish the appropriate level of safety integrity (for example, control reliability).

The connection of the safety outputs must be in such a manner that the stop command issued by the Safety Module can not be overridden by a device or circuit that is not at the same level of safety integrity. This means that the safety outputs are interfaced on the output of the machine logic (for example, PLC or PC). Then, normally, a feedback signal identifies to the machine logic the status of the Safety Module and, if possible, the status of the MPCEs.

In summary, Control Reliability (OSHA 29CFR1910.217, ANSI B11, and ANSI/RIA R15.06) and Category 3 and 4 (EN ISO 13849-1) requirements demand that a single failure does not lead to the loss of the safety function, or does not prevent a normal or immediate stop from occurring. The failure or the fault must be detected at or before the next demand of safety (for example, at the beginning or end of a cycle, or when a safeguard is actuated). The safety-related function of the machine control then must issue an immediate stop command or prevent the next machine cycle or hazardous situation until the failure or fault is corrected.

External Device Monitoring

To satisfy the requirements of Control Reliability (OSHA and ANSI) and Category 3 and 4 of EN ISO 13849-1, the machine primary control elements (MPCEs) must each offer a normally closed, forced-guided (mechanically linked) monitor contact. Connect one normally closed monitor contact from each master stop control element in series to Y1 and Y2 (see "Electrical Installation" on page 13).

In operation, if one of the switching contacts of either MPCE fails in the energized condition, the associated monitor contact will remain open. Therefore, it will not be possible to reset the Safety Module. If no MPCE-monitor contacts are monitored, a jumper must be installed between terminals Y1 and Y2 (dotted line), as shown in the hookup drawings. **It is the user's responsibility to ensure that any single failure will not result in a hazardous condition and will prevent a successive machine cycle.**

Overvoltage Category II and III Installations (EN 50178 and IEC 60664-1)

The AT-FM-10K is rated for Overvoltage Category III when voltages of 1 V to 150 V AC/DC are applied to the output relay contacts. It is rated for Overvoltage Category II when voltages of 151 V to 250 V AC/DC are applied to the output relay contacts and no additional precautions are taken to attenuate possible overvoltage situations in the supply voltage. The AT-

© Banner Engineering Corp. All rights reserved.
www.bannerengineering.com

FM-10K can be used in an Overvoltage Category III environment (with voltages of 151 V to 250 V AC/DC) if care is taken either to reduce the level of electrical disturbances seen by the AT-FM-10K to Overvoltage Category II levels by installing surge suppressor devices (for example, arc suppressors), or to install extra external insulation in order to isolate both the AT-FM-10K and the user from the higher voltage levels of a Category III environment.

For Overvoltage Category III installations with applied voltages from 151 V to 250 V AC/DC applied to the output contact(s): the AT-FM-10K may be used under the conditions of a higher overvoltage category where appropriate overvoltage reduction is provided. Appropriate methods include:

- An overvoltage protective device
- A transformer with isolated windings
- A distribution system with multiple branch circuits (capable of diverting energy of surges)
- A capacitance capable of absorbing energy of surges
- A resistance or similar damping device capable of dissipating the energy of surges

When switching inductive AC loads, it is good practice to protect the AT-FM-10K outputs by installing appropriately-sized arc suppressors. However, if arc suppressors are used, they must be installed across the load being switched (for example, across the coils of external safety relays), and never across the AT-FM-10K's output contacts.

© Banner Engineering Corp. All rights reserved.

Chapter Contents

Initial Checkout Procedure 17
Daily Checkout Procedure 17
Semi-Annual Checkout Procedure 18
Repairs 18
Contact Us 19
Banner Engineering Corp Limited Warranty 19

Chapter 5 Product Support and Maintenance

Initial Checkout Procedure

To perform the initial checkout, it is necessary to view the red Fault LED and the four green status indicators: Power, Input 1, Input 2 and Output. Proceed with caution around open wiring.

CAUTION:

- **Disconnect power prior to checkout**
- Dangerous voltages might be present along the module wiring barriers whenever power to the machine control elements is on.
- Before performing the initial checkout procedure, disconnect all power from the machine to be controlled. Exercise extreme caution whenever machine control power is or might be present. Always disconnect power to the machine control elements before opening the enclosure housing of the module.

WARNING:

- **External Device Monitoring (EDM)**
- Creating a hazardous situation could result in serious injury or death.
- If the system is configured for “no monitoring,” it is the user’s responsibility to ensure this does not create a hazardous situation.

1. Verify that the two actuating devices are properly connected to the Module.
2. Apply power to the Safety Module and to the actuating devices, if applicable.
3. Verify that only the Power indicator is ON. If any of the other Safety Module indicators are ON, disconnect the power to the Safety Module and check all wiring. Do not continue this checkout procedure until the cause of the problem is corrected.
4. Activate both hand controls simultaneously (within 0.5 seconds), and hold them engaged. Input 1 and Input 2 indicators should come ON. Release both hand controls simultaneously. Output indicator should go OFF.
5. Again, activate the two hand controls simultaneously, and hold them engaged. Input 1, Input 2, and Output indicators should come ON. Release one hand control, while holding the other engaged. One of the indicators should remain ON. The Output indicator should go OFF. Re-activate the hand control which was just released. The Output indicator should remain OFF. Release both hand controls. Input 1 and Input 2 indicators should then be OFF.
6. Activate only one hand control and hold it engaged. Input 1 (Input 2) indicator should come ON. After more than 1/2 second, activate the second hand control. Input 1 and 2 indicators should remain ON, while Output indicator remains OFF.
7. Remove power from the Safety Module and disconnect the monitor contact feedback loop at terminals Y1 and/or Y2. Re-apply power to the Safety Module. Activate both hand controls simultaneously. Output indicator LED should flash.

If the Safety Module passes all of these tests, reconnect the output wires at terminals 13/14 and 23/24. **Do not attempt to use the Safety Module until all of the tests are passed.**

Daily Checkout Procedure

To be Performed at every Power-up, Shift Change, and Tooling/Machine Setup Change.

© Banner Engineering Corp. All rights reserved.
www.bannerengineering.com

The daily checkout must be performed by a Designated Person, appointed and identified in writing by the employer, or by a Qualified Person (see below).

WARNING:
- **External Device Monitoring (EDM)**
- Creating a hazardous situation could result in serious injury or death.
- If the system is configured for “no monitoring,” it is the user’s responsibility to ensure this does not create a hazardous situation.

1. Verify that all point-of-operation guards are in place and operating properly.
2. Verify that the two actuating devices must be simultaneously engaged to actuate the machine.
3. **For single-cycle machines:** Verify that maintained engagement of the two actuating devices results in only one machine cycle.

   For part-revolution clutch machinery: Verify that release of either actuating device results in the immediate arrest of the machine motion.
4. Verify that the distance from each actuating device to the closest hazard point is not less than the calculated safety distance.

Semi-Annual Checkout Procedure

To be Performed at Six-Month Intervals.

This semi-annual checkout must be performed by a Qualified Person (a person who, by possession of a recognized degree or certificate of professional training, or who, by extensive knowledge, training, and experience, has successfully demonstrated the ability to solve problems relating to the installation, maintenance and use of the Safety System). Keep a copy of the test results on or near the machine.

WARNING:
- **External Device Monitoring (EDM)**
- Creating a hazardous situation could result in serious injury or death.
- If the system is configured for “no monitoring,” it is the user’s responsibility to ensure this does not create a hazardous situation.

1. Perform the daily checkout procedure.
2. Perform the initial checkout procedure.
3. Calculate the separation distance, and verify that the actuating devices are far enough away from the nearest hazard point. Relocate the actuating devices, if necessary.
4. Verify that the actuating devices are positioned to require the use of both hands for operation, and are protected from false or inadvertent operation.
5. Inspect the machine controls and the connections to the Safety Module to ensure that wiring is correct and that no modifications have been made which could adversely affect the System.

Repairs

Do not attempt any repairs to the Safety Module. It contains no field-replaceable components. Return it to the factory for warranty repair or replacement.

© Banner Engineering Corp. All rights reserved.

WARNING:

- **Do not abuse the module after failure**—If an internal fault has occurred and the module will not reset, do not tap, strike, or otherwise attempt to correct the fault with a physical impact to the housing.
- Failure to follow these instructions could result in serious injury or death.
- An internal relay might have failed in such a manner that its replacement is required. If the module is not immediately replaced or repaired, multiple simultaneous failures might accumulate such that the safety function cannot be guaranteed.

If it becomes necessary to return a Safety Module to the factory:

1. Contact Banner Factory Application Engineering at the address or at the numbers listed in this document. They will attempt to troubleshoot the system from your description of the problem. If they conclude that a component is defective, they will issue an RMA (Return Merchandise Authorization) number for your paperwork, and give you the proper shipping address.
2. Pack the component carefully. Damage which occurs in return shipping is not covered by warranty.

To remove a terminal block, insert a small screwdriver into the slot as shown; pry to loosen

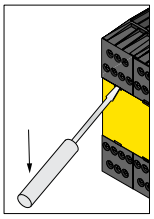

Contact Us

Banner Engineering Corp. | 9714 Tenth Avenue North | Plymouth, MN 55441, USA | Phone: + 1 888 373 6767

For worldwide locations and local representatives, visit www.bannerengineering.com.

Banner Engineering Corp Limited Warranty

Banner Engineering Corp. warrants its products to be free from defects in material and workmanship for one year following the date of shipment. Banner Engineering Corp. will repair or replace, free of charge, any product of its manufacture which, at the time it is returned to the factory, is found to have been defective during the warranty period. This warranty does not cover damage or liability for misuse, abuse, or the improper application or installation of the Banner product.

THIS LIMITED WARRANTY IS EXCLUSIVE AND IN LIEU OF ALL OTHER WARRANTIES WHETHER EXPRESS OR IMPLIED (INCLUDING, WITHOUT LIMITATION, ANY WARRANTY OF MERCHANTABILITY OR FITNESS FOR A PARTICULAR PURPOSE), AND WHETHER ARISING UNDER COURSE OF PERFORMANCE, COURSE OF DEALING OR TRADE USAGE.

This Warranty is exclusive and limited to repair or, at the discretion of Banner Engineering Corp., replacement. **IN NO EVENT SHALL BANNER ENGINEERING CORP. BE LIABLE TO BUYER OR ANY OTHER PERSON OR ENTITY FOR ANY EXTRA COSTS, EXPENSES, LOSSES, LOSS OF PROFITS, OR ANY INCIDENTAL, CONSEQUENTIAL OR SPECIAL DAMAGES RESULTING FROM ANY PRODUCT DEFECT OR FROM THE USE OR INABILITY TO USE THE PRODUCT, WHETHER ARISING IN CONTRACT OR WARRANTY, STATUTE, TORT, STRICT LIABILITY, NEGLIGENCE, OR OTHERWISE.**

Banner Engineering Corp. reserves the right to change, modify or improve the design of the product without assuming any obligations or liabilities relating to any product previously manufactured by Banner Engineering Corp. Any misuse, abuse, or improper application or installation of this product or use of the product for personal protection applications when the product is identified as not intended for such purposes will void the product warranty. Any modifications to this product without prior express approval by Banner Engineering Corp will void the product warranties. All specifications published in this document are subject to change; Banner reserves the right to modify product specifications or update documentation at any time. Specifications and product information in English supersede that which is provided in any other language. For the most recent version of any documentation, refer to: www.bannerengineering.com.

For patent information, see www.bannerengineering.com/patents.

© Banner Engineering Corp. All rights reserved.
www.bannerengineering.com

LinkedIn

X

Facebook

Instagram



© 2025. All rights reserved.
www.bannerengineering.com