MSA-RM-2 Relay Module

Datasheet

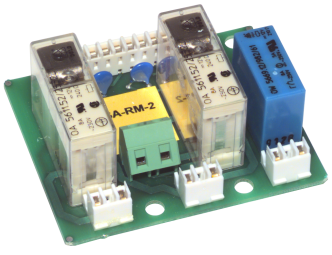

- FSD1, FSD2, and CNC outputs are rated for 6 amps (resistive) at 250 V AC
- SSD is rated for 4 amps (resistive) at 250 V AC
- If a MINI-SCREEN or MICRO-SCREEN manual is accompanied by this datasheet, the optional MSA-RM-2 Relay Module is factory-installed in the control box.

It is important for the safe operation of the light screen system that the user comply with all relevant product manuals and regulations.

If the Complementary Normally Closed Auxiliary output (“CNC AUX”) is used as a stand-alone output (it is not interfaced with one or both of the FSD outputs), it is a non-safety-related output. The CNC AUX output is typically used for monitoring purposes and may not be suitable for safety applications. The CNC AUX output status is the opposite of the FSD1 and FSD2 safety outputs.

The wiring diagram shows the output relay connections in a generic interfacing solution. The connections between the safety light screen outputs and the machine primary and secondary control elements must be direct and arranged so that any single line fault or earth fault will not result in a circuit failure to a potentially dangerous state.

Banner Engineering Corp Limited Warranty

Banner Engineering Corp. warrants its products to be free from defects in material and workmanship for one year following the date of shipment. Banner Engineering Corp. will repair or replace, free of charge, any product of its manufacture which, at the time it is returned to the factory, is found to have been defective during the warranty period. This warranty does not cover damage or liability for misuse, abuse, or the improper application or installation of the Banner product.

THIS LIMITED WARRANTY IS EXCLUSIVE AND IN LIEU OF ALL OTHER WARRANTIES WHETHER EXPRESS OR IMPLIED (INCLUDING, WITHOUT LIMITATION, ANY WARRANTY OF MERCHANTABILITY OR FITNESS FOR A PARTICULAR PURPOSE), AND WHETHER ARISING UNDER COURSE OF PERFORMANCE, COURSE OF DEALING OR TRADE USAGE.

This Warranty is exclusive and limited to repair or, at the discretion of Banner Engineering Corp., replacement. **IN NO EVENT SHALL BANNER ENGINEERING CORP. BE LIABLE TO BUYER OR ANY OTHER PERSON OR ENTITY FOR ANY EXTRA COSTS, EXPENSES, LOSSES, LOSS OF PROFITS, OR ANY INCIDENTAL, CONSEQUENTIAL OR SPECIAL DAMAGES RESULTING FROM ANY PRODUCT DEFECT OR FROM THE USE OR INABILITY TO USE THE PRODUCT, WHETHER ARISING IN CONTRACT OR WARRANTY, STATUTE, TORT, STRICT LIABILITY, NEGLIGENCE, OR OTHERWISE.**

Banner Engineering Corp. reserves the right to change, modify or improve the design of the product without assuming any obligations or liabilities relating to any product previously manufactured by Banner Engineering Corp. Any misuse, abuse, or improper application or installation of this product or use of the product for personal protection applications when the product is identified as not intended for such purposes will void the product warranty. Any modifications to this product without prior express approval by Banner Engineering Corp will void the product warranties. All specifications published in this document are subject to change; Banner reserves the right to modify product specifications or update documentation at any time. Specifications and product information in English supersede that which is provided in any other language. For the most recent version of any documentation, refer to: www.bannerengineering.com.

For patent information, see www.bannerengineering.com/patents.

Wiring Diagram

Important: * In USA and Canadian 115 V AC and European 230 V AC supply systems, L is AC “hot” and N is AC “neutral”. In USA and Canadian 230 V AC systems, L and N are both AC “hot”.

WARNING:

- **Install arc suppressors properly.**
- If installed directly across the contacts of a safety light screen switching device, a short-circuited suppressor will create an unsafe condition that could result in serious injury or death.
- Never install arc suppressors directly across the output contacts of any safeguarding device. If arc suppressors are used, they must be installed as shown across the coils of the safety relays. It is possible for suppressors to fail as a short circuit.

ПРОМЭЛЕКТРОНИКА/ sales@prom-elec.com

WARNING:

- **Use All Safety Light Screen Output Contacts**
- Failure to follow these instructions could result in serious injury or death.
- All MINI-SCREEN (or MICRO-SCREEN) System output contacts (FSD1, FSD2, and SSD) must be used. The generalized wiring configuration shown here is provided only to illustrate the importance of proper installation. The specific actual wiring of the safety light screen system to any particular machine is solely the responsibility of the installer and end user.

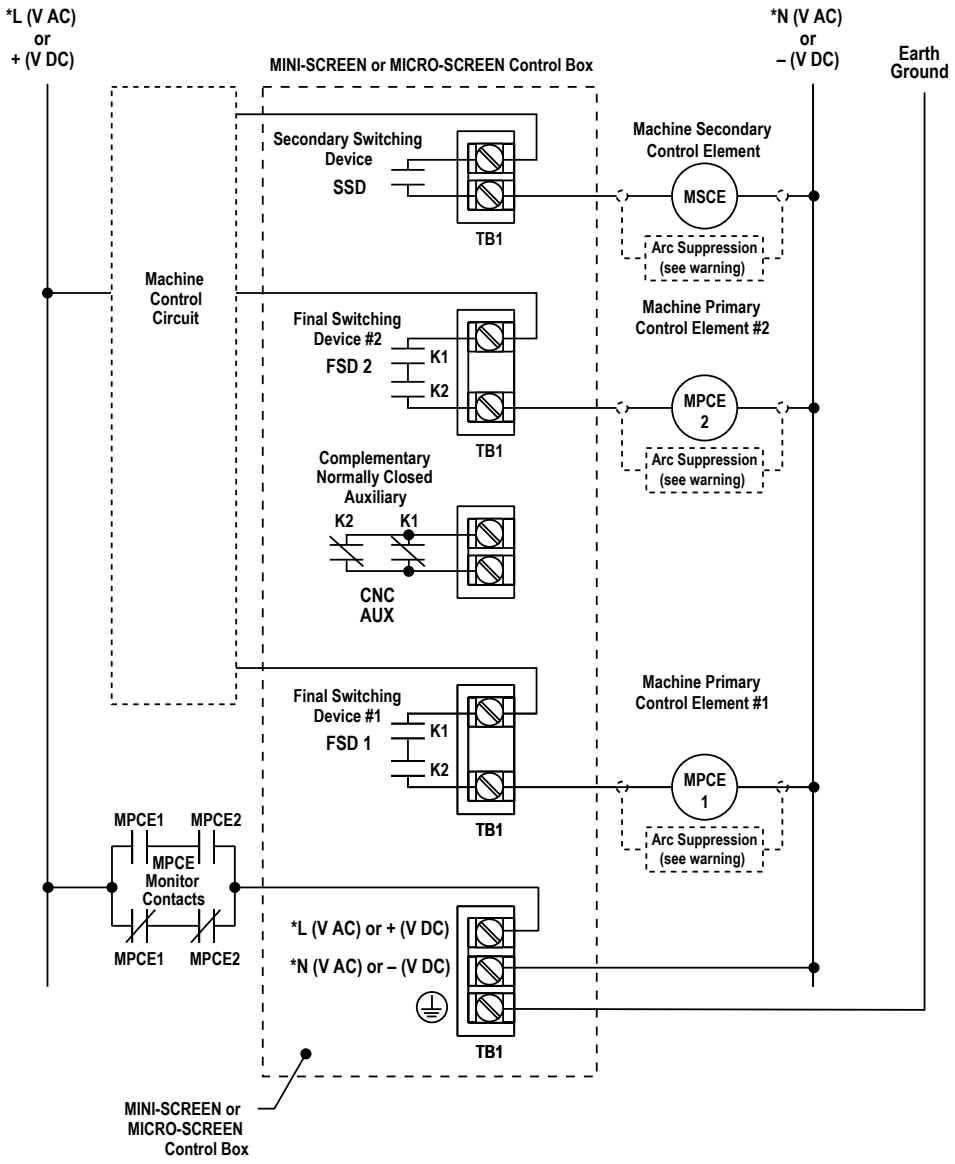

© Banner Engineering Corp. All rights reserved