Features

High-Intensity LED Ring Light for use with PresencePLUS and other Vision Systems



- Compact ring light for PresencePLUS and other Vision Systems
- Four extremely bright LEDs for illumination of targets from 0.15 meters to beyond 2 meters (0.49 feet to 6.56 feet)
- Continuous or strobed operation
- Optically isolated strobe signal
- Fixed or adjustable intensity, depending on model
- Maintenance-free, rugged construction
- Evenly and intensely illuminates a 610 millimeters (24 inches) diameter at 1 meter (3.28 feet)

IMPORTANT: Read the following instructions before operating the light. Please download the complete LED High-Intensity Ring Light technical documentation, available in multiple languages, from www.bannerengineering.com for details on the proper use, applications, Warnings, and installation instructions of this device.

IMPORTANT: Lea el siguiente instructivo antes de operar el luminario. Por favor descargue desde www.bannerengineering.com toda la documentación técnica de los LED High-Intensity Ring Light, disponibles en múltiples idiomas, para detalles del uso adecuado, aplicaciones, advertencias, y las instrucciones de instalación de estos dispositivos.

IMPORTANT: Lisez les instructions suivantes avant d'utiliser le luminaire. Veuillez télécharger la documentation technique complète des LED High-Intensity Ring Light sur notre site www.bannerengineering.com pour les détails sur leur utilisation correcte, les applications, les notes de sécurité et les instructions de montage.

Models

Model[1]	LED Color	Bracket	Cable
LEDRR70XD5-XQ	Red, 620 nm to 630 nm	Optional bracket available (see Mounting Bracket)	150 mm (6 in) PVC-jacketed cable with a 5-pin M12 male quick-disconnect connector[2]
LEDWR70XD5-XQ	White, 5000 K to 8300 K		
LEDBR70XD5-XQ	Blue, 465 nm to 485 nm		
LEDGR70XD5-XQ	Green, 520 nm to 535 nm		
LEDIR70XD5-XQ	Infrared, 850 nm		
LEDUV395R70XD5-XQ	UV, 395 nm		
LEDRR70XD5-XM	Red, 620 nm to 630 nm	Built-in P4 bracket (see dimensions)	300 mm (12 in) cable with a 3-pin M8 male quick-disconnect connector[3]
LEDWR70XD5-XM	White, 5000 K to 8300 K		
LEDBR70XD5-XM	Blue, 465 nm to 485 nm		
LEDGR70XD5-XM	Green, 520 nm to 535 nm		
LEDIR70XD5-XM	Infrared, 850 nm		
LEDUV395R70XD5-XM	UV, 395 nm		

The following caution applies to UV 395 nm models:

(1) For models with controllable intensity, add “P” to the model number (e.g., LEDRR70XD5-PQ).
(2) Requires an M12 cordset.
(3) Connects directly to the P4 sensor.

Original Instructions
21-Jan-26

© Banner Engineering Corp. All rights reserved.
www.bannerengineering.com

153910
p/n: 153910 Rev. H

ПРОМЭЛЕКТРОНИКА/ sales@prom-elec.com

CAUTION:
Risk Group 2: UV Emitted from this product.

Eye or skin irritation may result from exposure. Use appropriate shielding and eye protection. Risk Group 2 (RG 2) products generally do not pose a realistic optical hazard if aversion responses limit the exposure duration or where lengthy exposures are unrealistic.

- IEC 62471

Wiring

Wire Purpose	Cable Wire Color[4]	Continuous On Mode	Strobed Mode		*Presence*Plus Pro Controller Terminal Block
Pinouts for Mating Cordset 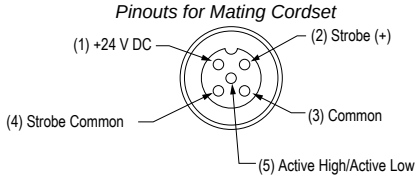 					
Power Wires	**Brown (1)**	+24 V DC	+24 V DC		Pin 01[5]
	Blue (3)	common	common		Pin 02
Strobe Polarity Control	**Gray (5)**	open	**Active Low:** open		Open — Active Low
			Active High: connect to common (Blue wire)		Pin 02 — Active High
Strobe Voltage Wires	**White (2)**	open	0 V DC = ON (Active Low)	+5 V DC to 24 V DC = OFF (Active Low)	Pin 04
			0 V DC = OFF (Active High)	+5 V DC to 24 V DC = ON (Active High)	
	Black (4)	open	Strobe common		Pin 02

Light Intensity Adjustment

Turn the 270° intensity potentiometer with a small flat-blade screwdriver to adjust the light's intensity.

1. Apply power to the light and turn the potentiometer all the way clockwise for maximum intensity.
2. If the object to be sensed is too bright at maximum intensity, turn the potentiometer counterclockwise, a little at a time, testing with the target object, until the correct brightness is achieved.

Specifications

Light Source
Four high-intensity LEDs; see models table for wavelengths

Illumination
610 mm (24 in) diameter usable light pattern at 1 m

Strobe
Optically isolated

Supply Voltage and Current
Operating Voltage: 24 V DC ±10%
Strobe Voltage: 5 V DC to 24 V DC at 15 mA maximum
Current Draw at Full Intensity: 350 mA maximum
Built-in constant current regulator for LEDs
Potentiometer controls variable intensity for "P" models
Use only with a suitable Class 2 power supply (UL) or SELV power supply (CE)
See the electrical characteristics on the product label.

Construction
Enclosure rating: IP50
Housing: aluminum, black anodized
Window: acrylic, clear with frosted diffusing surface on inside
Bracket: aluminum, black anodized. Attaches ring light directly to *Presence*PLUS P4 with 2 included M4x14 screws

Useful Life
When operated within specifications, output will decrease less than 30% after 50,000 hours for visible and IR models, 20,000 hours for UV models

Operating Conditions
Temperature: 0 °C to +50 °C (+32 °F to +122 °F)
Humidity: 90% maximum relative humidity (non-condensing)

[4] For Banner-supplied wire.
[5] When connecting the light to a *Presence*PLUS Pro controller terminal block, the controller supply must be 24 V DC ± 10%.

© Banner Engineering Corp. All rights reserved.
www.bannerengineering.com

Certifications

Banner Engineering BV
Park Lane, Culliganlaan 2F bus 3
1831 Diegem, BELGIUM

Required Overcurrent Protection

WARNING: Electrical connections must be made by qualified personnel in accordance with local and national electrical codes and regulations.

Overcurrent protection is required to be provided by end product application per the supplied table.

Overcurrent protection may be provided with external fusing or via Current Limiting, Class 2 Power Supply.

Supply wiring leads < 24 AWG shall not be spliced.

For additional product support, go to www.bannerengineering.com.

Supply Wiring (AWG)	Required Overcurrent Protection (A)	Supply Wiring (AWG)	Required Overcurrent Protection (A)
20	5.0	26	1.0
22	3.0	28	0.8
24	2.0	30	0.5

Light Characteristics

Values shown are typical at 25°C.

	Lumens				mWatts	
	Cool White	Green	Red	Blue	IR	UV395
LEDxR70	390	340	240	130	945	475

Optical Data

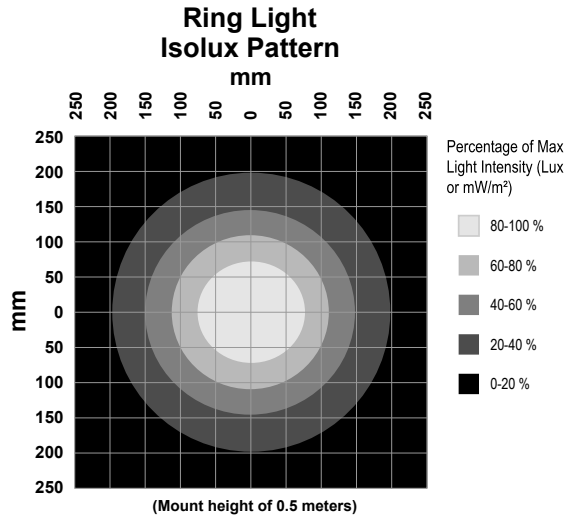

Values shown are typical at 25 °C.

Distance (m)	Max Center Beam Lux (lux)				Max Center Beam Irradiance (mW/m²)		Beam Width (m)	
	Cool White	Green	Red	Blue	IR	UV395	Vertical (Spread 29.6°)	Horizontal (Spread 28.4°)
0.25	16,620	14,489	10,228	5,540	40,272	20,242	0.13	0.13
0.5	5,150	4,490	3,169	1,717	12,479	6,272	0.26	0.25
1	1,125	981	692	375	2,726	1,370	0.53	0.51

© Banner Engineering Corp. All rights reserved.
www.bannerengineering.com

Dimensions

All measurements are listed in millimeters [inches], unless noted otherwise. The measurements provided are subject to change.

Q Models

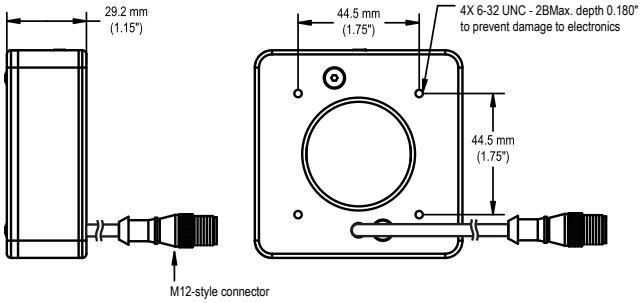

M Models

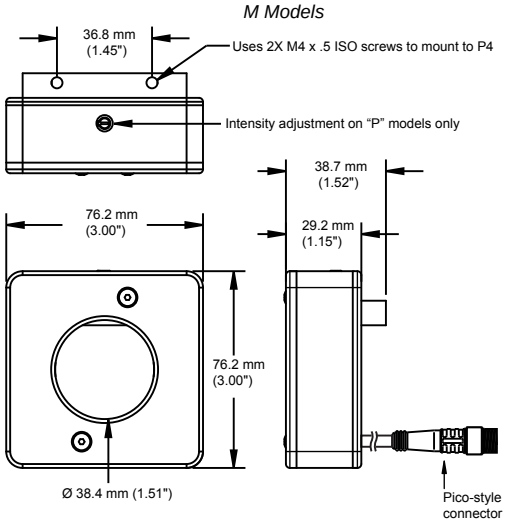

Accessories

Cordsets

5-Pin Single-Ended M12 Female Cordsets				
Model	**Length**	**Style**	**Dimensions**	**Pinout (Female)**
MQDC1-501.5	0.5 m (1.5 ft)	Straight	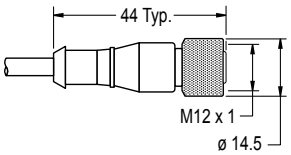	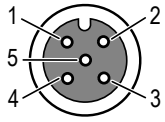 1 = Brown 2 = White 3 = Blue 4 = Black 5 = Gray c UL us
MQDC1-503	0.9 m (2.9 ft)			
MQDC1-506	2 m (6.5 ft)			
MQDC1-515	5 m (16.4 ft)			
MQDC1-530	9 m (29.5 ft)			
MQDC1-560	18 m (59 ft)			
MQDC1-5100	31 m (101.7 ft)			
MQDC1-506RA	2 m (6.5 ft)	Right-Angle	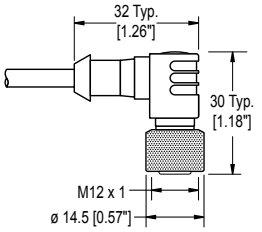	
MQDC1-515RA	5 m (16.4 ft)			
MQDC1-530RA	9 m (29.5 ft)			
MQDC1-560RA	19 m (62.3 ft)			

© Banner Engineering Corp. All rights reserved.
www.bannerengineering.com

Brackets

SMBPPRHI

- Black zinc plated cold rolled steel bracket
- Mounts directly to Presence*PLUS* Pro sensor
- Includes: 2 – 6-32 screws (socket drive, button head) 4 – M3 screws (socket drive, cap head)
- CAD Files: DXF, PDF, IGS, STP



Banner Engineering Corp Limited Warranty

Banner Engineering Corp. warrants its products to be free from defects in material and workmanship for one year following the date of shipment. Banner Engineering Corp. will repair or replace, free of charge, any product of its manufacture which, at the time it is returned to the factory, is found to have been defective during the warranty period. This warranty does not cover damage or liability for misuse, abuse, or the improper application or installation of the Banner product.

THIS LIMITED WARRANTY IS EXCLUSIVE AND IN LIEU OF ALL OTHER WARRANTIES WHETHER EXPRESS OR IMPLIED (INCLUDING, WITHOUT LIMITATION, ANY WARRANTY OF MERCHANTABILITY OR FITNESS FOR A PARTICULAR PURPOSE), AND WHETHER ARISING UNDER COURSE OF PERFORMANCE, COURSE OF DEALING OR TRADE USAGE.

This Warranty is exclusive and limited to repair or, at the discretion of Banner Engineering Corp., replacement. **IN NO EVENT SHALL BANNER ENGINEERING CORP. BE LIABLE TO BUYER OR ANY OTHER PERSON OR ENTITY FOR ANY EXTRA COSTS, EXPENSES, LOSSES, LOSS OF PROFITS, OR ANY INCIDENTAL, CONSEQUENTIAL OR SPECIAL DAMAGES RESULTING FROM ANY PRODUCT DEFECT OR FROM THE USE OR INABILITY TO USE THE PRODUCT, WHETHER ARISING IN CONTRACT OR WARRANTY, STATUTE, TORT, STRICT LIABILITY, NEGLIGENCE, OR OTHERWISE.**

Banner Engineering Corp. reserves the right to change, modify or improve the design of the product without assuming any obligations or liabilities relating to any product previously manufactured by Banner Engineering Corp. Any misuse, abuse, or improper application or installation of this product or use of the product for personal protection applications when the product is identified as not intended for such purposes will void the product warranty. Any modifications to this product without prior express approval by Banner Engineering Corp will void the product warranties. All specifications published in this document are subject to change; Banner reserves the right to modify product specifications or update documentation at any time. Specifications and product information in English supersede that which is provided in any other language. For the most recent version of any documentation, refer to: www.bannerengineering.com.

For patent information, see www.bannerengineering.com/patents.

Mexican Importer

Banner Engineering de Mèxico, S. de R.L. de C.V. | David Alfaro Siqueiros 103 Piso 2 Valle oriente | San Pedro Garza Garcia Nuevo Leòn, C. P. 66269

81 8363.2714

© Banner Engineering Corp. All rights reserved.
www.bannerengineering.com