SLE10 Expert Series Slot Sensor

Datasheet

Self-Contained Opposed-Mode Sensor Pair with Teach Mode

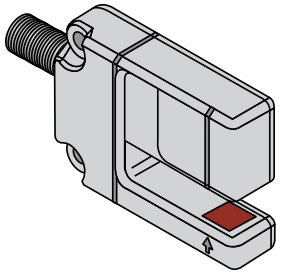

- An easy-to-use, self-contained opposed-mode sensor pair in a rugged U-shaped housing
- Easy push-button programming automatically adjusts sensitivity to optimal setting
- Dynamic TEACH programming option provides on-the-fly convenience and minimizes the effects of web flutter
- Separate TEACH input allows remote programming by an external device, such asa switch or a process controller
- Easy output programming eliminates the need for Light or Dark Operate selection
- Choose fast 500 microsecond or 150 microsecond output response
- 1 mm effective beam
- Visible red beam
- Molded-in beam guides simplify beam placement
- 10 mm (0.39 in) slot width for a wide variety of sensing applications
- Applications include label detection, hole detection, edge guiding and counting, and small parts detection
- 10 V DC to 30 V DC operation
- Bipolar PNP/NPN outputs
- Choose integral, unterminated cable or QD models

WARNING:

- **Do not use this device for personnel protection**
- Using this device for personnel protection could result in serious injury or death.
- This device does not include the self-checking redundant circuitry necessary to allow its use in personnel safety applications. A device failure or malfunction can cause either an energized (on) or de-energized (off) output condition.

Models

Models	Sensing Beam	Slot Width	Cable[1]	Supply Voltage	Output Type	Response	Repeatability
SLE10B6V	Visible red, 680 nm	10.0 mm (0.39 in)	2 m (6.5 ft) 5-wire cable	10 V dc to 30 V dc	Bipolar NPN and PNP	500 microseconds	100 microseconds
SLE10B6VQ			5-Pin Euro-style QD				
SLE10B6VY			2 m (6.5 ft) 5-wire cable			150 microseconds	75 microseconds
SLE10B6VYQ			5-Pin Euro-style QD				

Overview

The SLE10 Expert Slot Sensor (sometimes called a fork sensor) comprises an opposed-mode emitter and its receiver inside a single convenient housing.

Opposed-mode sensing is very reliable, and the single self-contained housing provides easy installation, with no sensor alignment required. In addition, the molded-in arrow on the emitter portion of the housing and the slotted design on the receiver portion of the housing show at a glance the position of the beam, simplifying installation placement.

Expert series sensors feature easy-to-use push-button programming, performed in TEACH mode. TEACH-mode programming may be performed using either the push button, or remotely, using a remote switch or process controller. The programming determines whether the sensor outputs will conduct in light or dark conditions, and defines the light and dark conditions for the sensor in each application. The remote switch also may be used to disable the programming push button for security.

The Dynamic TEACH option provides a means for teaching a series of conditions; the sensor monitors the sensing events and automatically sets the threshold between light and dark conditions.

[1] To order the 9 m (30 ft) PVC cable model, add the suffix "W/30" to the cabled model number. For example, SLE10B6V W/30. Models with a quick disconnect require a mating cordset.

© Banner Engineering Corp.

ПРОМЭЛЕКТРОНИКА/ sales@prom-elec.com

Features

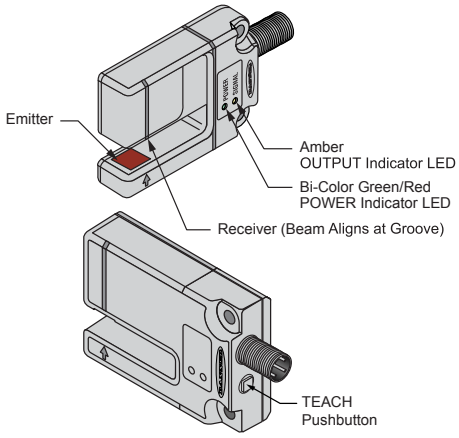

SLE10 Expert Typical Applications

Register Mark Detection on Clear Film

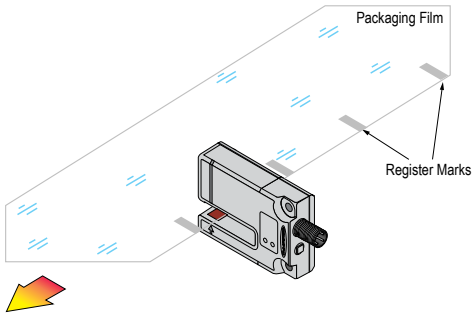

Label Detection

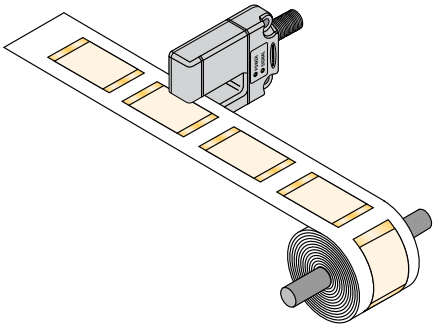

Wiring Diagrams

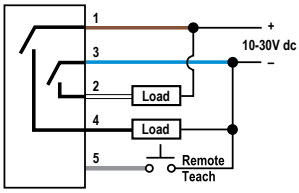

NOTE: Quick disconnect wiring diagrams are functionally identical.

Run Mode

Normal operation of the SLE10 Expert is called RUN mode. The two LED indicators (bi-color green/red and amber) operate as follows in RUN Mode:

Green (RUN Mode)

ON steady whenever power is applied

Flashes as received light level approaches the switching threshold (stability indicator. The stability indicator signals when maintenance or reprogramming is needed during RUN mode.)

Amber (Output)

ON when the outputs are energized (conducting)

OFF when the outputs are de-energized (not conducting)

If contrast is marginal, the bi-color indicator flashes green (to indicate instability). Reprogramming the sensor, or cleaning the sensor lenses may solve a problem with stability.

TEACH Mode

Program the SLE10 Expert—set the sensitivity and select output ON and OFF conditions—in TEACH Mode. The SLE10 Expert provides two methods for programming: Static TEACH and Dynamic TEACH. Static TEACH is used in all programming situations to set up the sensor's output ON and output OFF conditions. Sensitivity is then set using either the Static method or the Dynamic method.

Both Static TEACH and Dynamic TEACH may be performed using either the sensor's TEACH push button or the remote TEACH line.

© Banner Engineering Corp. All rights reserved.

Remote Programming

The gray wire of the SLE10 Expert may be connected to a remote switch or process controller to disable or enable the push button (four-pulse) or to program the sensor (single-pulse) through TEACH mode. Remote programming may be done for both the Static and Dynamic TEACH procedures.

A remote programming switch is connected between the gray wire and dc common (see the wiring diagram). The switch may be either a normally-open contact, or an open-collector NPN transistor with its emitter connected to dc common.

Programming is accomplished using a specified sequence of input pulses. The duration of each pulse is defined as: 0.04 seconds < T < 0.8 seconds.

The required spacing between adjacent pulses in a sequence (a “four-pulse”) is also: 0.04 < T < 0.8 seconds. The timing diagrams illustrate the input requirements.

To pulse the TEACH line, momentarily connect the remote wire to dc common (no press-and-hold procedure is required to enter TEACH mode). This is the equivalent of a click when using the sensor TEACH push button.

Timing Programs for Remote Programming

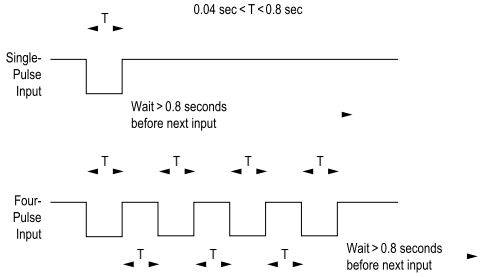

Enable/Disable the Push Button

When remote programming is used exclusively, it may be beneficial to disable the push button on the SLE10 Expert to increase the security of the settings. The push button can be enabled and/or disabled via the remote line only. If the push button is disabled, TEACH mode cannot be accessed from the push button.

Pulse the Remote TEACH line four times (four-pulse) to enable or disable the push button.

Static TEACH

Determine the Output ON and OFF Conditions

The two sensing conditions may be presented in either order. The condition presented first is the condition for which the outputs will energize (the Output ON target).

Set Sensitivity

Sensitivity is automatically set (and optimized) when teaching the sensor the ON and OFF conditions. When the push button is clicked, the sensor samples each sensing condition and registers it into memory. After the second sensing condition is registered, the SLE10 Expert automatically sets the sensitivity to the optimum value for the application, and then returns to RUN mode.

LED Indicators

The two LED indicators (bi-color green/red and amber) operate as follows in TEACH Mode:

Red (TEACH Mode)

Lights when the sensor sees its modulated light source; pulse rate is proportional to the received light signal strength during TEACH programming

Amber (Output)

ON to indicate TEACH output ON condition

OFF to indicate TEACH output OFF condition

Signal Strength Indicator

The Signal Strength indicator is Banner's exclusive AID™ (Alignment Indicating Device). Its pulse rate increases as the received light signal strength increases (during programming). This feature simplifies accurate alignment during TEACH mode, and gives a relative indication of sensing contrast between the light and dark conditions.

Static TEACH

1. Enter TEACH mode.

© Banner Engineering Corp. All rights reserved.

Method	Action		Result
Push Button[1]	Press and hold the TEACH button until the bi-color (green/red) indicator begins to flash red, or turns OFF (longer than two seconds).		Indicator Status Amber: ON Red: Pulses to indicate relative received signal strength, or OFF for a weak signal.
Remote Input[2]	N/A		The sensor is ready for the first sensing condition.

2. TEACH Condition #1 (Output ON state).

Method	Action		Result
Push Button	a. Present the first sensing condition to the sensor. b. Single-click the TEACH button.		Indicator Status Amber: OFF Red: Pulses to indicate relative received signal strength, or OFF for a weak signal.
Remote Input	a. Present the first sensing condition to the sensor. b. Single-pulse the remote input.		Green/Red: Flash red or turn OFF (the AID™ function is indicating signal strength) Amber: Flash briefly, then turn off

3. TEACH Condition #2 (Output OFF state)

Method	Action		Result
Push Button	a. Present the second sensing condition to the sensor b. Single-click the TEACH button.		**TEACH Accepted** The green indicator turns on and the sensor returns to RUN mode. **TEACH Not Accepted** The sensor returns to TEACH Condition #1. Green: ON (or flashes if signal is close to the switching threshold). Amber: OFF, until the sensing condition changes.
Remote Input	a. Present the second sensing condition to the sensor. b. Single-pulse the remote input.		**TEACH Accepted** The green indicator turns on and the sensor returns to RUN mode **TEACH Not Accepted** The amber indicator turns on and the red AID indicator remains active, indicating that the sensor is waiting for the first TEACH condition to be taught again.

Dynamic TEACH

Dynamic TEACH is a method of setting the sensor's sensitivity while the object to be sensed is in motion.

Typical applications are label sensing and small parts detection. In a label application, web flutter may change the amount of light passing through the label and its backing material. Dynamic TEACH will sense this variation and adjust the sensitivity to account for it.

In a small parts detection application, alignment of the object to the sensor's effective beam may make Static TEACH difficult. In this case, Dynamic TEACH will allow you to pass individual or multiple parts through the beam; the sensor then will detect them and set the sensitivity automatically.

Determine the Output ON and OFF Conditions

Dynamic TEACH is used for optimizing the sensor's sensitivity and will not configure the output ON and OFF conditions. A Static TEACH must be used first to change the output ON and OFF conditions, if needed. If the outputs are configured properly for your installation, Dynamic TEACH may be performed as needed without reverting back to Static TEACH.

---

[1] The sensor returns to RUN mode if the first TEACH condition is not registered within 90 seconds. TEACH mode may be cancelled before either condition #1 or #2 by pressing the button for 2 seconds or longer. If the button is pressed for 2 seconds or longer, the sensor returns to RUN mode.
[2] To exit Static TEACH without updating, hold the Remote TEACH line low (longer than 2 seconds) until the green indicator goes ON, before teaching the second target.

© Banner Engineering Corp. All rights reserved.

Set Sensitivity

Sensitivity is automatically set and optimized when the sensor is taught dynamically. When the push button is depressed and held, the sensor continues to sample events and registers them into memory. Upon release of the button, the sensor chooses the optimum setting for the application and then returns to RUN mode.

Dynamic Sampling Rate

When using Dynamic TEACH to sample an application for programming, it is important to consider the speed of the object being sensed. The sensor's sampling rate during this set-up process is much slower than its response time in RUN mode. Once sampling is complete and the sensor returns to RUN mode, sensor response time returns to its original value.

Use the following formula to calculate the target object speed for Dynamic TEACH sampling:

Maximum speed of object as it passes the sensor = [Width of the object (in inches) – effective beam (0.07 in)] ÷ Dynamic Sampling Rate (0.009 seconds)[1]

For example, for an object 0.125 inches wide, the maximum object speed is:

(0.125 in – 0.07 in) ÷ 0.009 seconds = 6.1 in /second

For an object 2 mm wide, the maximum object speed is:

(2 mm – 1.8 mm) ÷ 0.009 seconds = 2.2 mm/second

Dynamic TEACH

When using remote TEACH, set up the application’s Output ON and OFF conditions using the Static TEACH procedure. This step is not necessary if the Output ON and OFF conditions already are configured properly for your application.

1.

Method	Action		Result
Push Button[2]	Press and hold the TEACH button until the bi-color (green/red) indicator begins to flash red, or turns OFF.		Amber: ON Red: Pulses to indicate relative received signal strength.
Remote Input[3]	N/A		The sensor is ready for the first sensing condition.

2. Initiate Dynamic TEACH Mode.

Method	Action		Result
Push Button	Double-click the TEACH button.		Amber: Pulses at 0.5 Hz. Red: ON
Remote Input	Double-pulse the remote input.	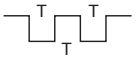	

3. Begin the TEACH process.

Method	Action		Result
Push Button	Press and hold the TEACH button and present the sensing condition.		Amber: ON Solid Red: ON Solid
Remote Input	Hold the Remote line low. Sample sensing events while continuing to hold the Remote line low.	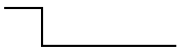	

4. End the TEACH process.

---

[1] The Dynamic Sampling Rate for high-speed models ("Y" model suffix) is 8 milliseconds (0.008 seconds) .
[2] The sensor will return to RUN mode if the first TEACH condition is not registered within 90 seconds. Dynamic TEACH mode may be cancelled by waiting 90 seconds or by cycling sensor power.
[3] For remote input, to exit Dynamic TEACH without updating, wait 90 seconds or cycle the sensor power.

© Banner Engineering Corp. All rights reserved.

Method	Action		Result
Push Button	Release the TEACH button.		**TEACH Accepted** The sensor returns to RUN mode. **TEACH Not Accepted** The sensor returns to Static TEACH mode. Double click the TEACH button to initiate Dynamic TEACH. Green: ON (or flashes if signal is close to the switching threshold). Amber: ON or OFF, depending on condition
Remote Input	Release the Remote line when event sampling is complete.		**TEACH Accepted** The green indicator turns on and the sensor returns to RUN mode with the new settings. **TEACH Not Accepted** Red: Flashes at a rate proportional to the received light signal strength Amber: ON, indicating the need to TEACH the sensor again. Return to step 2.

Specifications

Supply Voltage and Current
10 V dc to 30 V dc (10% maximum ripple) at less than 45 mA, exclusive of load

Supply Protection Circuitry
Protected against reverse polarity and transient voltages

Output Configuration
Bipolar: One current sourcing (PNP) and one current sinking (NPN) open-collector transistor

Output Rating
150 mA maximum each output at 25 °C, derated to 100 mA at 70 °C (derate ≈1 mA per °C)

OFF-state leakage current: less than 5 µA at 30 V dc

ON-state saturation current: less than 1 V at 10 mA; less than 1.5 V at 150 mA

Output Protection Circuitry
Protected against output short-circuit, continuous overload, and false pulse on power-up

Output Response Time
Sensors respond to either a light or a dark signal of 500 microseconds (or 150 microseconds, depending on model) or longer duration, 1 kHz maximum

> **NOTE:** 1 second delay on power-up; outputs are non-conducting during this time.

Repeatability
100 microseconds or 75 microseconds, depending on model

Effective Beam
1 mm (0.04 in)

Indicators
Two LEDs: Amber and Bi-color Green/Red

Green (RUN Mode):
ON when power is applied
Flashes when received light level approaches the switching threshold

Red (TEACH Mode):
OFF when no signal is received.
Pulses to indicate signal strength (received light level). Rate is proportional to signal strength (the stronger the signal, the faster the pulse rate). This is a function of Banner's patented Alignment Indicating Device (AID™, US patent 4356393).

Alternating Red/Green: Microprocessor memory error (see Troubleshooting)

Amber (Static TEACH):
ON to indicate sensor is ready to learn output ON condition
OFF to indicate sensor is ready to learn output OFF condition

Amber (Dynamic TEACH):
Pulses at 0.5 Hz when ready to sample
ON to indicate Dynamic TEACH sampling
OFF to indicate sampling was accepted

Amber (RUN Mode):
ON when outputs are conducting

Adjustments
Push-button TEACH mode sensitivity setting; remote TEACH mode input is provided (gray wire)

Environmental Rating
IP67; meets NEMA 6

Construction
ABS/polycarbonate housing, acrylic lenses

Connections
PVC-jacketed 5-conductor 2 m (6.5 ft) or 9 m (30 ft) unterminated cable, or 5-pin Euro-style quick-disconnect (QD) fitting are available. QD cables are ordered separately.

Operating Conditions
–20 °C to +60 °C (–4 °F to +140 °F)

90% at +50 °C maximum relative humidity (non-condensing)

© Banner Engineering Corp. All rights reserved.

Application Notes

The first condition presented during TEACH mode becomes the output ON condition.

Required Overcurrent Protection

WARNING: Electrical connections must be made by qualified personnel in accordance with local and national electrical codes and regulations.

Overcurrent protection is required to be provided by end product application per the supplied table.

Overcurrent protection may be provided with external fusing or via Current Limiting, Class 2 Power Supply.

Supply wiring leads < 24 AWG shall not be spliced.

For additional product support, go to www.bannerengineering.com.

Supply Wiring (AWG)	Required Overcurrent Protection (A)	Supply Wiring (AWG)	Required Overcurrent Protection (A)
20	5.0	26	1.0
22	3.0	28	0.8
24	1.0	30	0.5

Certifications

IND. CONT. EQ.
E224071
LISTED

Dimensions

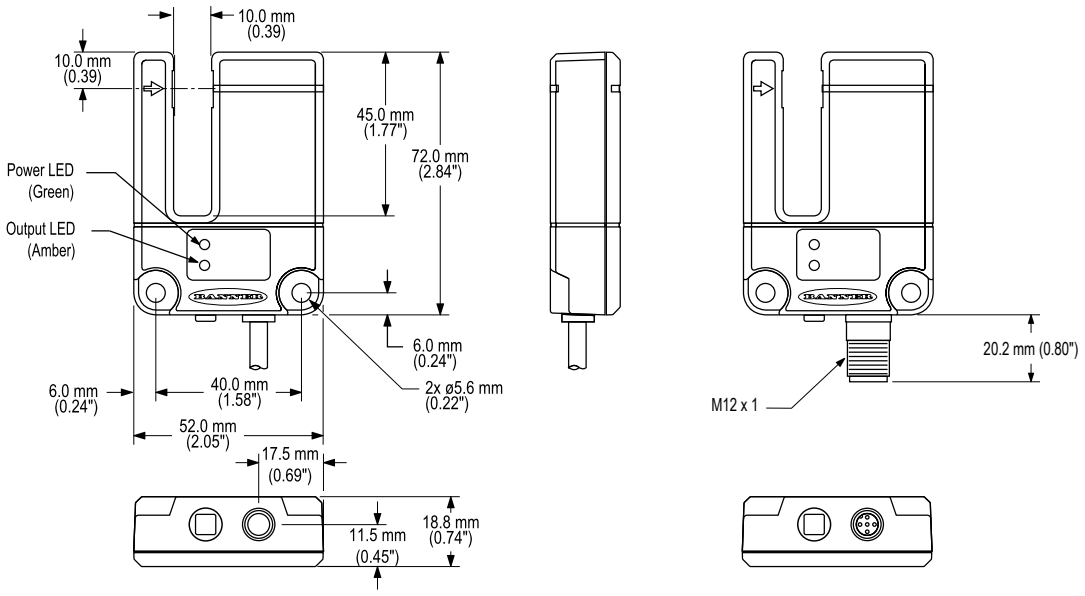

All measurements are listed in millimeters [inches], unless noted otherwise.

Troubleshooting

The SLE10 Expert POWER LED may begin to alternate flashing red/green; this indicates a microprocessor memory error. If it occurs, try re-teaching the sensor, or try cycling power ON and OFF, then re-teaching the sensor. If this does not solve the problem, or if it occurs frequently, replace the sensor.

© Banner Engineering Corp. All rights reserved.

Accessories

Cordsets

5-Pin Threaded M12 Cordsets—Single Ended				
Model	**Length**	**Style**	**Dimensions**	**Pinout (Female)**
MQDC1-501.5	0.5 m (1.5 ft)	Straight	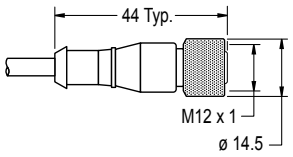	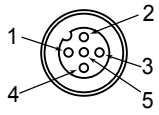 1 = Brown 2 = White 3 = Blue 4 = Black 5 = Gray
MQDC1-503	0.9 m (2.9 ft)			
MQDC1-506	2 m (6.5 ft)			
MQDC1-515	5 m (16.4 ft)			
MQDC1-530	9 m (29.5 ft)			
MQDC1-560	18 m (59 ft)			
MQDC1-5100	31 m (101.7 ft)			
MQDC1-506RA	2 m (6.5 ft)	Right-Angle	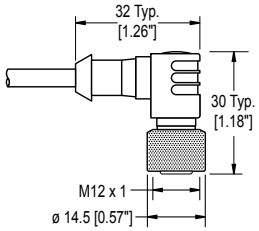	
MQDC1-515RA	5 m (16.4 ft)			
MQDC1-530RA	9 m (29.5 ft)			
MQDC1-560RA	19 m (62.3 ft)			

Brackets

SMBSL

- Angled bracket
- 304 stainless steel
- Hardware included

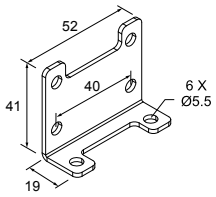

Banner Engineering Corp. Limited Warranty

Banner Engineering Corp. warrants its products to be free from defects in material and workmanship for one year following the date of shipment. Banner Engineering Corp. will repair or replace, free of charge, any product of its manufacture which, at the time it is returned to the factory, is found to have been defective during the warranty period. This warranty does not cover damage or liability for misuse, abuse, or the improper application or installation of the Banner product.

THIS LIMITED WARRANTY IS EXCLUSIVE AND IN LIEU OF ALL OTHER WARRANTIES WHETHER EXPRESS OR IMPLIED (INCLUDING, WITHOUT LIMITATION, ANY WARRANTY OF MERCHANTABILITY OR FITNESS FOR A PARTICULAR PURPOSE), AND WHETHER ARISING UNDER COURSE OF PERFORMANCE, COURSE OF DEALING OR TRADE USAGE.

This Warranty is exclusive and limited to repair or, at the discretion of Banner Engineering Corp., replacement. **IN NO EVENT SHALL BANNER ENGINEERING CORP. BE LIABLE TO BUYER OR ANY OTHER PERSON OR ENTITY FOR ANY EXTRA COSTS, EXPENSES, LOSSES, LOSS OF PROFITS, OR ANY INCIDENTAL, CONSEQUENTIAL OR SPECIAL DAMAGES RESULTING FROM ANY PRODUCT DEFECT OR FROM THE USE OR INABILITY TO USE THE PRODUCT, WHETHER ARISING IN CONTRACT OR WARRANTY, STATUTE, TORT, STRICT LIABILITY, NEGLIGENCE, OR OTHERWISE.**

Banner Engineering Corp. reserves the right to change, modify or improve the design of the product without assuming any obligations or liabilities relating to any product previously manufactured by Banner Engineering Corp. Any misuse, abuse, or improper application or installation of this product or use of the product for personal protection applications when the product is identified as not intended for such purposes will void the product warranty. Any modifications to this product without prior express approval by Banner Engineering Corp will void the product warranties. All specifications published in this document are subject to change; Banner reserves the right to modify product specifications or update documentation at any time. Specifications and product information in English supersede that which is provided in any other language. For the most recent version of any documentation, refer to: www.bannerengineering.com.

For patent information, see www.bannerengineering.com/patents.

Document title: SLE10 Expert Series Slot Sensor
Part number: 60378
Revision: B
Original Instructions
© Banner Engineering Corp. All rights reserved.

60378

© Banner Engineering Corp. All rights reserved.