

SI-MAG Non-Contact Magnetic Safety Interlock Switch Instruction Manual

Original Instructions
p/n: 210255 Rev. G
10-Jun-26
© Banner Engineering Corp. All rights reserved. www.bannerengineering.com

ПРОМЭЛЕКТРОНИКА/ sales@prom-elec.com

Contents

Chapter 1 Product Overview 3
Models 3
Important... Read this before proceeding! 4
Overview 4
Specifications 4
Magnetic Switch Dimensions 5

Chapter 2 Installation Instructions 7
Installation Requirements 7
Pass-Through Hazards and Perimeter Guarding 8
Mechanical Installation 8
Direction of Approach Options for Sensor/Magnet Pairs 9
Electrical Installation 11
Monitoring Series-Connected Safety Switches 12
Wiring an Individual Magnetic Switch 12
Wiring Magnetic Switches in Series 13
Wiring for Quick Disconnect Magnetic Switches 14

Chapter 3 Accessories 15

Chapter 4 Product Support and Maintenance 17
Repairs and Translations (No Field-Replaceable Parts) 17
Contact Us 19
EU/UK Declaration of Conformity (DoC) 19
Banner Engineering Corp Limited Warranty 20

© Banner Engineering Corp. All rights reserved. www.bannerengineering.com

Chapter Contents

Models 3
Important... Read this before proceeding! 4
Overview 4
Specifications 4

Chapter 1 Product Overview

SI-MAG Non-Contact Magnetic Safety Interlock Switch for interlocking and position monitoring

- A two-piece coded magnetic field safeguarding device
- One switch and coded magnet properly placed on a door can achieve the highest levels of safety (Control Reliable, Cat 4, PL e or SIL CL 3) when properly monitored by a Safety Monitoring Module
- Accommodating to misalignment
- Coded magnets minimize the risk of intentional defeat
- Sealed components resist water and dirt
- Three housing styles available for flat or 30 mm barrel mounting
- Can be used for safety or non-safety interlocking and position monitoring

Models

Magnet/Sensor Pair	Magnet Sensor		Coded Magnet
	Model	Connection	
	**SI-MAGB1SM**	3 m cable with flying leads	**SI-MAGB1MM** (Switching distance: 4 mm to 14 mm) OR **SI-MAGB1MM90** (90° orientation) (Switching distance: 4 mm to 14 mm) OR **SI-MAGB1MMHF** (Switching distance: 8 mm to 16 mm)
	SI-MAGB1SMCO	3 m cable with flying leads; cable opposite	
	SI-MAGB1SMQD	4-pin M8 QD connector	
	SI-MAGB1SMCOQD	4-pin M8 QD connector; connector opposite	
	**SI-MAGB2SM**	3 m cable with flying leads	**SI-MAGB2MM** (Switching distance: 3 mm to 14 mm)
	SI-MAGB2SMQD	4-pin M8 QD connector	
	**SI-MAGB3SM**	3 m cable with flying leads	**SI-MAGB3MM** (Switching distance: 5 mm to 14 mm)
	SI-MAGB3SMQD	4-pin M12 QD connector	

The magnet sensors listed have a 3 m (10 ft) cable. To order 9 m (30 ft) cables models, add **w/30** to the model number (e.g. **SI-MAGB1SM w/30**). (Older models without the **B**, are non-UL approved models. These older models do NOT work with **SI-MAGB** models.)

A basic SI-MAG system requires an SI-MAG sensor, coded magnet, cable (for QD versions), and a safety monitoring device.

> **NOTE:** This manual also applies to the older magnetic switches, specifically the models that do not contain the 'B' in their model name.

© Banner Engineering Corp. All rights reserved.
www.bannerengineering.com

Important... Read this before proceeding!

The user is responsible for satisfying all local, state, and national laws, rules, codes, and regulations relating to the use of this product and its application. Banner Engineering Corp. has made every effort to provide complete application, installation, operation, and maintenance instructions. Please contact a Banner Applications Engineer with any questions regarding this product.

The user is responsible for making sure that all machine operators, maintenance personnel, electricians, and supervisors are thoroughly familiar with and understand all instructions regarding the installation, maintenance, and use of this product, and with the machinery it controls. The user and any personnel involved with the installation and use of this product must be thoroughly familiar with all applicable standards, some of which are listed within the specifications. Banner Engineering Corp. makes no claim regarding a specific recommendation of any organization, the accuracy or effectiveness of any information provided, or the appropriateness of the provided information for a specific application.

Overview

The SI-MAG Non-Contact Magnetic Safety Interlock Switch is a magnetically operated position switch based on reed contact technology.

The switching function is triggered by a permanent magnet approaching the active face or side. The operating distance depends on the size, strength, and direction of the actuating magnet and on the sensitivity of the reed contact.

Use the SI-MAG Safety Switch to monitor the position of a guard to detect its movement, opening, or removal. A "guard" can be a gate, door, cover, panel, barrier or other physical means that separates an individual from a hazard. Safety switches will issue a signal to the machine control system to prevent or stop (halt) hazardous situations when the guard is not in the proper position. These switches are designed for non-locking guarding applications, unless another means of locking is provided.

The SI-MAG Safety Switch is considered a Type 4 interlocking device per ISO 14119 that are actuated when the coded magnetic field interacting with the actuator (magnet) typically mounted on the guard. The coding of the SI-MAG Safety Switch is considered low because any coded magnet can work with any of the same body style switches.

Applications involving the use of magnetic safety interlock switches should take into consideration the following standards:

- ISO 13849-1/2 - Safety of Machinery - Safety Related Parts of Control Systems
- ISO 12100 - Safety of Machinery - Risk Assessment and Risk Reduction
- ISO 14119 - Safety of Machinery - Interlocking Devices Associated with Guards
- ANSI B11.0 - Safety of Machinery - General Requirements and Risk Assessment
- ANSI B11.19 - Performance Criteria for Safeguarding

Specifications

Switching Elements
Three pole-stable reed switches

Protection Class (Environment Rating)
IP67 according to IEC529 (EN 60529)

Mechanical Life
3×10^8 cycles, however, according to load resetability

Operating Frequency
1 Hz

Pollution Degree
3 according to EN 60947-1

Operating Temperature
–25 °C to +70 °C (–13 °F to +158 °F)
(Below –5 °C the cable must be fixed so that it cannot move)

Switching Capacity
0.25 VA

Repeat Switching Accuracy
0.1 × Switching Distance (under same geometrical conditions at the same temperature

Construction
Epoxy-encapsulated circuit in polyamide housing (PA 6)

Connections
Integral PVC jacketed 4-wire 26 AWG cable, 4-pin M12 QD, or 4-pin M8 QD, depending on the model

Safety Rating
B10d is 20 million cycles at 20% load, 0.4×10^6 cycles at nominal load per ISO 13849-1
Mission time: 20 years

© Banner Engineering Corp. All rights reserved.

Certifications

Maximum Switching Voltage: 60 V AC / 30 V DC

Maximum Switching Current: 0.08 A

Maximum Switching Capacity: 0.25 VA

All models: Banner Engineering BV
Park Lane, Culliganlaan 2F bus 3
1831 Diegem, BELGIUM

All models: Turck Banner LTD Blenheim House
Blenheim Court
Wickford, Essex SS11 8YT
GREAT BRITAIN

Cabled models only:

Ind Control Equipment / Class 2 Power Source Listed 4VZ3

Quick disconnect models only:

Magnetic Switch Dimensions

SI-MAG1SM Sensor

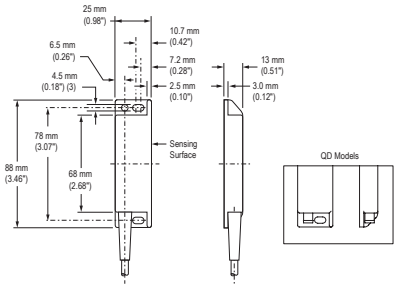

SI-MAG1SMCO Sensor

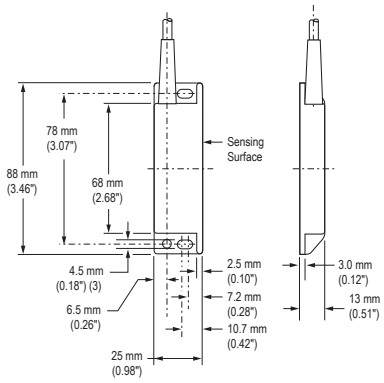

SI-MAG1MM/MM90/MMHF Magnet

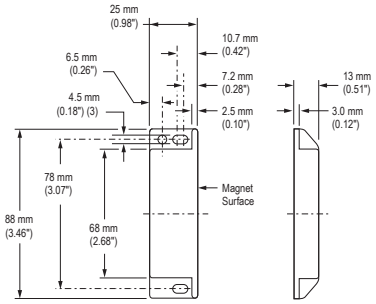

SI-MAG2SM Sensor

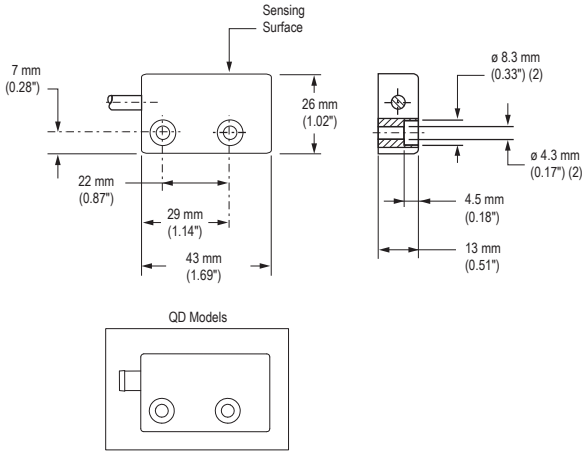

SI-MAG2MM Magnet

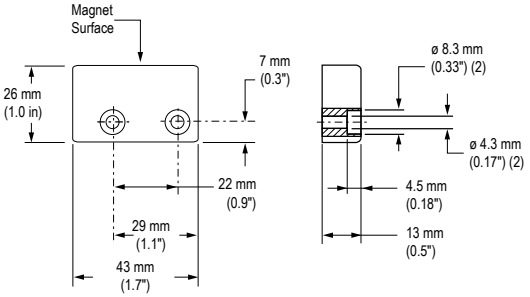

© Banner Engineering Corp. All rights reserved.
www.bannerengineering.com

SI-MAG3SM Sensor

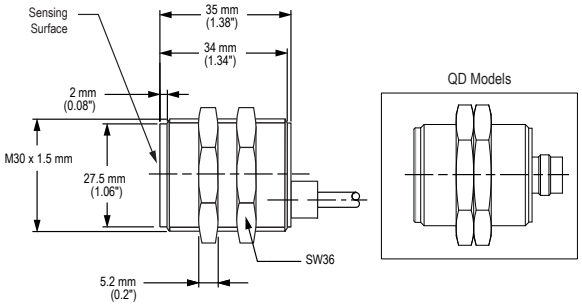

SI-MAG3MM Magnet

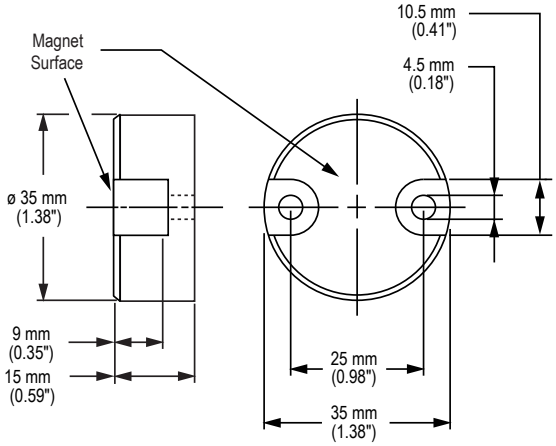

© Banner Engineering Corp. All rights reserved.

Chapter Contents

Installation Requirements 7
Pass-Through Hazards and Perimeter Guarding 8
Mechanical Installation 8
Electrical Installation 11

Chapter 2 Installation Instructions

Installation Requirements

The following general requirements and considerations apply to the installation of interlocked gates and guards for the purpose of safeguarding. In addition, the user must refer to the relevant regulations and comply with all necessary requirements. See ANSI B11.19, or ISO 14119 and ISO 14120, or the appropriate standard.

Hazards guarded by the interlocked guard must be prevented from operating until the guard is closed; a stop command must be issued to the guarded machine if the guard opens while the hazard is present. Closing the guard must not, by itself, initiate hazardous motion; a separate procedure must be required to initiate the motion.

Locate the guard an adequate distance from the danger zone (so the hazard has time to stop before the guard is opened sufficiently to provide access to the hazard). Guard locking or supplemental safeguarding must be used if the overall stopping time of the machine or the time to remove the hazard is greater than the time to access the guarded area. The guard must open either laterally or away from the hazard, not into the safeguarded area. The guard also should not be able to close by itself and activate the interlocking circuitry. The installation must prevent personnel from reaching over, under, around or through the guard to access the hazard. Any openings due to positioning, movement, or misalignment in the guard must not allow access to the hazard—see ANSI B11.19, ISO 13855, ISO 13857, or the appropriate standard.

The guard must be strong enough and designed to protect personnel and contain hazards within the guarded area that can be ejected, dropped, or emitted by the machine. Mount the SI-MAG Safety Switch securely so that the physical position cannot shift, using reliable fasteners that require a tool to remove. Mounting slots in the housing, if provided, are for initial adjustment only; final mounting holes (round) must be used for permanent location. The switches, actuating systems, and actuators must not be used as a mechanical or end-of-travel stop.

When the guard is closed, the magnet is guided toward the switch. When the switch on distance is reached, the magnetic field of the magnet interacts with the reed switches. If the polarity of the magnetic field is correct the reed switches change state to the door closed position. When the guard is opened, the magnetic field is removed from the response range of the switch. This allows the reed relays to switch back to the door open position.

See "Mechanical Installation" on page 8, "Electrical Installation" on page 11, switching distances listed in Models, and Specifications for additional information.

Design and install the safety switches and actuators so that they cannot be easily defeated. Measures to minimize defeat (bypassing) of interlocking safety switches include:

- Minimizing motivation for defeating interlocking by providing training, supervision, and efficient means for machine setup/adjustment, operation and maintenance
- Limiting accessibility to the interlocking device, such as mounting out of reach, mounting behind a physical obstruction, mounting in a concealed position
- Preventing the switch or the actuator from being disassembled or repositioned that compromises the safety function. (for example, welding, one-way screws, riveting)
- Monitoring the control system for cyclic switch functioning
- Using hardware that requires a tool to remove that is not readily available.

© Banner Engineering Corp. All rights reserved.

WARNING:

- **Properly Install the Interlocked Guards**
- Failure to follow these guidelines could result in serious injury or death.
- At a minimum, the interlocked guard must prevent hazards when not fully closed and must prevent access to the hazards through any opening in the guard.
- Install the safety switches and actuators so they cannot be easily defeated and are not used as a mechanical or end-of-travel stop.
- The user must refer to the relevant regulations and comply with all necessary requirements. See ANSI B11.19, or ISO 14119 and ISO 14120, or the appropriate standard.

CAUTION:

- **Do not use the safety switch as a mechanical or end-of-travel stop.**
- Catastrophic damage can cause the safety switch to fail in an unsafe manner (that is, loss of the switching action).
- Limit the movement or rotation of the guard to prevent damage to the safety switch or the actuator.

Pass-Through Hazards and Perimeter Guarding

A pass-through hazard is associated with applications where personnel may pass through a safeguard (which issues a stop command to remove the hazard), and then continues into the guarded area, such as in perimeter guarding. Subsequently, their presence is no longer detected, and the related danger becomes the unexpected start or restart of the machine while personnel are within the guarded area.

Eliminate or reduce pass-through hazards whenever possible—see ANSI B11.19 and ANSI B11.20 or ISO 11161. One method to mitigate the risk is to ensure that once tripped, either the safeguarding device, the safety related part of the control system, or the guarded machine's MSCs/MPCEs will latch in an OFF condition. The latch must require a deliberate manual action to reset that is separate from the normal means of machine cycle initiation.

This method relies upon the location of the reset switch as well as safe work practices and procedures to prevent an unexpected start or restart of the guarded machine. All reset switches must be:

- Outside the guarded area
- Located to allow the switch operator a full, unobstructed view of the entire guarded area while the reset is performed
- Out of reach from within the guarded area
- Protected against unauthorized or inadvertent operation (such as through the use of rings or guards)

If any areas within the guarded area are not visible from the reset switch, additional safeguarding must be provided.

WARNING:

- **Perimeter guarding applications**
- Failure to observe this warning could result in serious injury or death.
- Use lockout/tagout procedures per ANSI Z244.1, or use additional safeguarding as described by ANSI B11.19 safety requirements or other applicable standards if a passthrough hazard cannot be eliminated or reduced to an acceptable level of risk.

Mechanical Installation

IMPORTANT: Install a safety switch in a manner that discourages tampering or defeat. Mount switches to prevent bypassing of the switching function at the terminal chamber or Quick Disconnect (QD). A switch and its actuator must never be used as a mechanical stop. Overtravel may cause damage to switch.

© Banner Engineering Corp. All rights reserved.

CAUTION: Mount the switch and its magnet a minimum distance of 15 mm (0.6 inches) from any magnetized or ferrous materials for proper operation. If either the sensor or magnet is mounted on a material that can magnetize (a ferrous metal, such as iron), the switching distance will be affected.

All mounting hardware is supplied by the user. Fasteners must be of sufficient strength to guard against breakage. Use permanent fasteners or locking hardware to prevent the loosening or displacement of the actuator and the switch body. The mounting holes (4.5 mm) in the switch and actuator body accept M4 (#6) hardware. If possible, do not use ferromagnetic screws to secure the magnet or the switch.

Mount the switch and magnet such that the position cannot be changed after installation/adjustment. Mount the switch securely on a solid, stationary surface and prevent the loosening of mounting hardware by using lock washers, thread-locking compound, etc. Only use slots for initial positioning. Pins, dowels, and splines can be used to prevent movement of the switch and the actuator.

Install the switch to prevent false or unintended actuation and intentional defect.

Locate the switch and magnet to allow access for functional checks, maintenance, and service or replacement. The installation should provide suitable clearances, be readily accessible, and allow access to the magnet and switch.

Although the switch and magnet are coded to minimize the possibility of false actuation, they should not be used within known fields of high-level electromagnetic radiation.

Depending on the model of the switch and magnet used, design the installation to provide the correct direction of approach. The speed of approach must be fast enough to meet the simultaneity-monitoring period of 1 second, approximately equal to or greater than 0.1 m (4 inches) per second. If the simultaneity requirement is not met, the Safety Monitoring Module cannot be reset and will not close it safety output contacts (or turn on it OSSDs).

CAUTION: Do not overtighten the units during installation. Overtighten can cause twisting in the housing, which affects the switches' performance. When tightening the mounting hardware, alternate between the two bolts until they are tight (torque to 1.0 to 1.5 Nm).

The installation should be carried out by authorized personnel. Many mounting positions may be used and the approach directions are shown. The vertical lines serve as an indication of the sensing face. The sensing faces must point at each other when the door is closed.

Sufficient spacing must be provided if installing a number of magnetic switches next to each other to ensure that several magnetic switches are not actuated by one magnet or bi-stable magnetic switches cannot mutually influence each other.

Direction of Approach Options for Sensor/Magnet Pairs

For all magnet-style switches, approach speed must be greater than 0.1 m/s to allow for proper switching.

Direction of Approach for SI-MAG1xx Sensor/Magnet Pairs

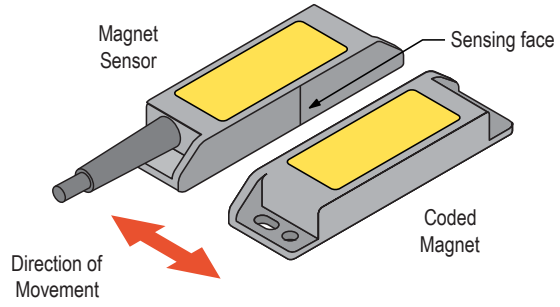

Normal Direction of Approach: movement is perpendicular to the plane of the sensing face

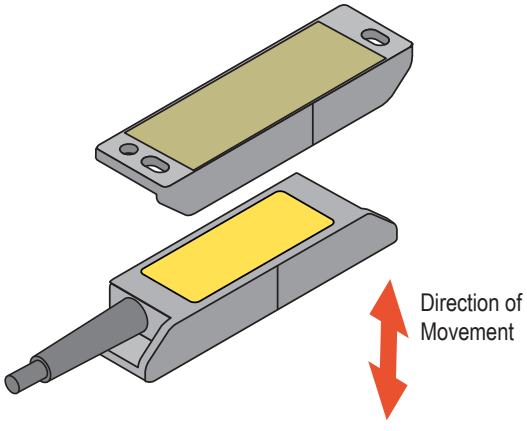

Incorrect Direction of Approach: Label-to-label approach of sensor and magnet is not possible

Continued on page 10

© Banner Engineering Corp. All rights reserved.
www.bannerengineering.com

Continued from page 9

Direction of Approach for SI-MAG1xx Sensor/Magnet Pairs

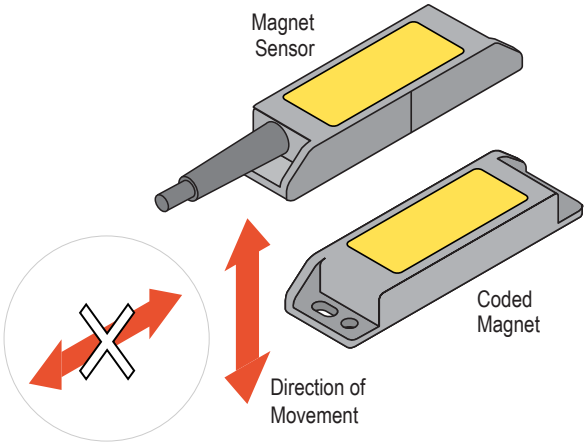

Alternate Direction of Approach: movement is parallel to the plane of the sensing face

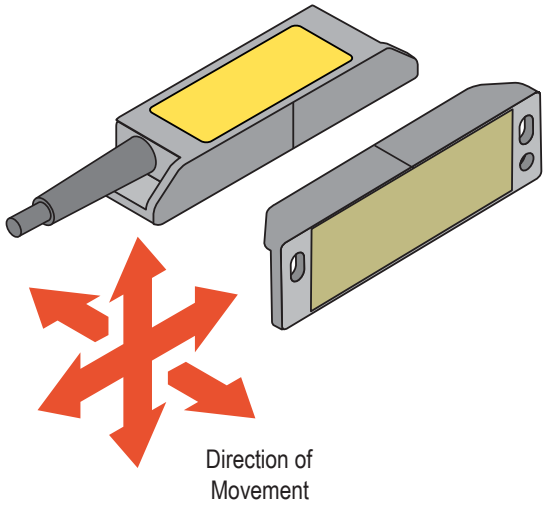

Incorrect Direction of Approach: 90º approach of sensor and magnet is only possible with the SI-MAG1MM90 magnet

Direction of Approach for SI-MAG2xx Sensor/Magnet Pairs

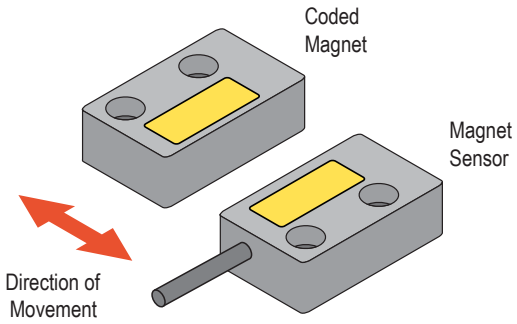

Normal Direction of Approach: movement is perpendicular to the plane of the sensing face

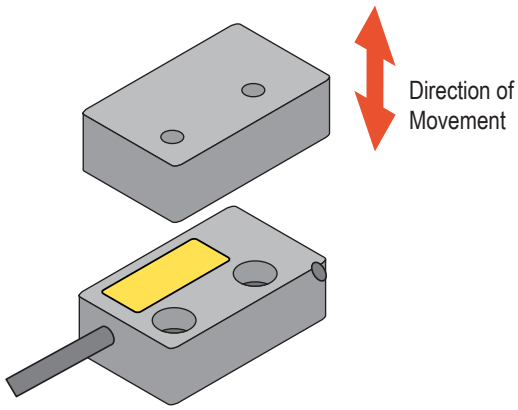

Incorrect Direction of Approach: Label-to-label approach of sensor and magnet is not possible

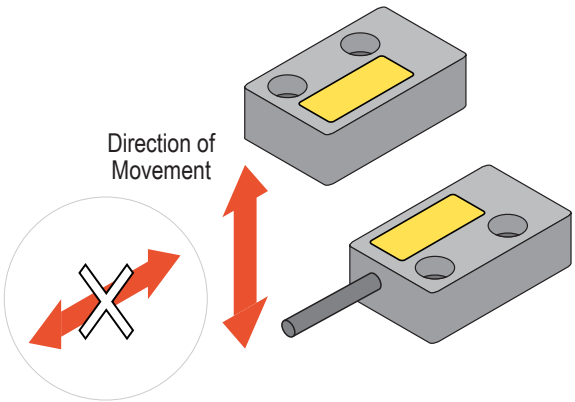

Alternate Direction of Approach: movement is parallel to the plane of the sensing face

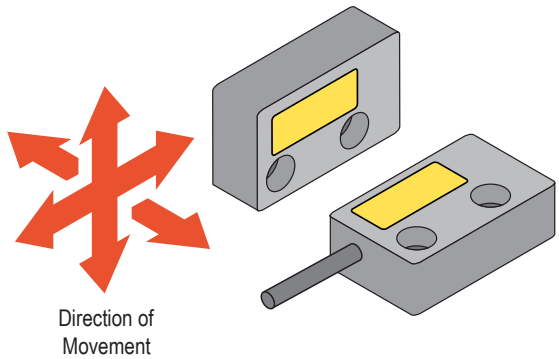

Incorrect Direction of Approach: 90º approach of sensor and magnet is not possible

© Banner Engineering Corp. All rights reserved.
www.bannerengineering.com

Direction of Approach for SI-MAG3xx Sensor/Magnet Pairs

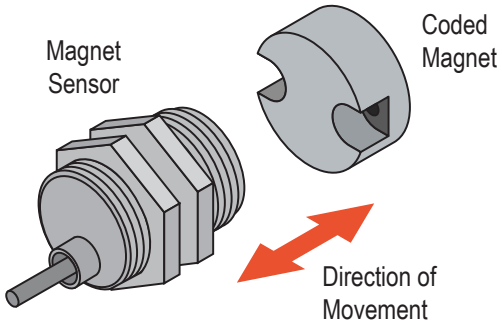

Normal Direction of Approach: movement is perpendicular to the plane of the sensing face.

Important! The horizontal line on the magnet face and sensor face must be parallel to each other for optimal performance.

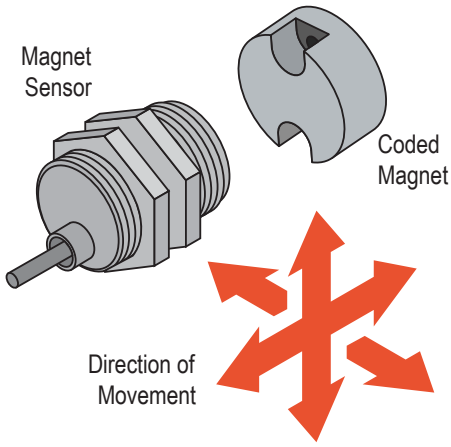

Incorrect Magnet Orientation

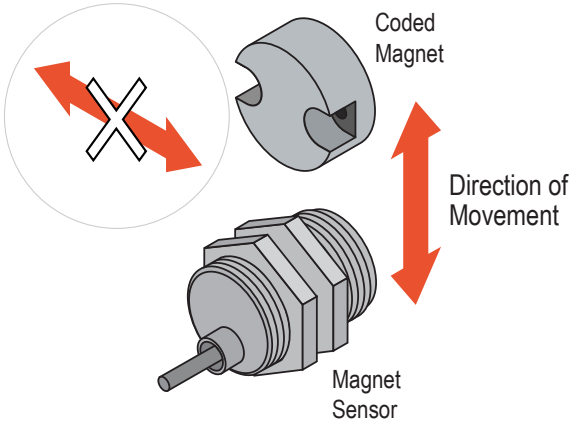

Alternate Direction of Approach: movement is parallel to the plane of the sensing face.

Important! The horizontal line on the magnet face and sensor face must be parallel to each other for optimal performance.

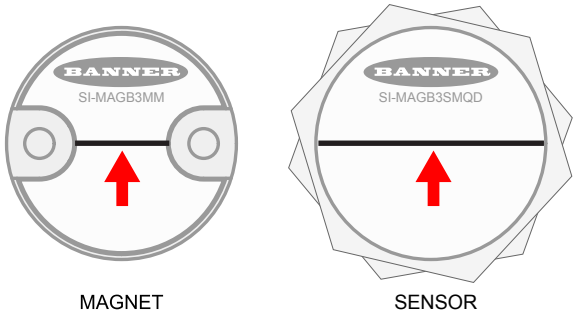

MAGNET SENSOR

The horizontal line on the magnet face and sensor face shown parallel to each other for optimal performance.

Electrical Installation

WARNING:

- **Risk of electric shock**
- Use extreme caution to avoid electrical shock. Serious injury or death could result.
- Always disconnect power from the safety system (for example, device, module, interfacing, etc.), guarded machine, and/or the machine being controlled before making any connections or replacing any component. Lockout/tagout procedures might be required. Refer to OSHA 29CFR1910.147, ANSI Z244-1, or the applicable standard for controlling hazardous energy.
- Make no more connections to the device or system than are described in this manual. Electrical installation and wiring must be made by a Qualified Person[1] and must comply with the applicable

[1] A person who, by possession of a recognized degree or certificate of professional training, or who, by extensive knowledge, training and experience, has successfully demonstrated the ability to solve problems relating to the subject matter and work.

© Banner Engineering Corp. All rights reserved.
www.bannerengineering.com

electrical standards and wiring codes, such as the NEC (National Electrical Code), NFPA 79, or IEC 60204-1, and all applicable local standards and codes.

Monitoring Series-Connected Safety Switches

Series-connected interlock switch circuits do not meet EN ISO 13849-1 Safety Category 4 and may not meet Control Reliability requirements because of the potential for an inappropriate reset or potential loss of the safety stop signal. A multiple connection of this type should not be used in applications where loss of the safety stop signal or an inappropriate reset can lead potentially to serious injury or death.

The following two scenarios assume a magnetic safety switch is installed on each guard:

1. **Masking of a failure**: If a guard is opened but a switch contact fails to change state, the safety redundant contact of the switch will change state and cause the Safety Monitoring Module to de-energize its outputs. If the faulty guard is then closed, the switches outputs return to the proper guard closed state, but because one channel did not change state, the Safety Monitoring Module will not reset (input fault situation). However, if the faulty switch is not replaced and a second 'good' guard is cycled (opened and then closed, properly cycling the modules input channels), the Safety Monitoring Module considers the failure to be corrected. With the input requirements apparently satisfied, the module allows a reset. This system is no longer redundant and, if the second contact fails, may result in an unsafe condition (i.e. the accumulation of faults results in the loss of the safety function).
2. **Non-detection of a failure**: If a guard with a good switch is opened, the Safety Monitoring Module de-energized its outputs. But if a guard with a faulty switch is then opened and closed before the good guard is closed, the failure on the faulty guard is not detected. This system is no longer redundant and may result in a loss of safety if the second contact fails to switch when needed.

The systems in either scenario do not inherently comply with the safety standard requirements of detecting single faults and preventing the next cycle. In multiple guard systems using series-connected safety switches, it is important to periodically check the functional integrity of each interlocked guard individually. Operators, maintenance personnel, and others associated with the operation of the machine must be trained to recognize such failures and be instructed to correct them immediately.

Open and close each guard separately while verifying that the Safety Monitoring Module's output operates correctly throughout the check procedure. Follow each gate closure with a manual reset, if needed. If a contact set fails, the Safety Monitoring Module will not enable its reset function. If the Safety Monitoring Module does not reset, a switch may have failed; that switch must be immediately replaced.

This check must be performed and all faults must be cleared, at a minimum, during periodic checkouts. If the application can not exclude these types of failures and such a failure could result in serious injury or death, then the series connection of safety switches must not be used.

Wiring an Individual Magnetic Switch

A moveable safety guard is monitored through one Magnetic Safety Interlock Switch. The safety output contacts of the magnetic switch are connected to a safety monitoring module. When the safety guard is closed (coded magnet detected), the magnetic switch's contacts switch to the ON (normal) state.

© Banner Engineering Corp. All rights reserved.

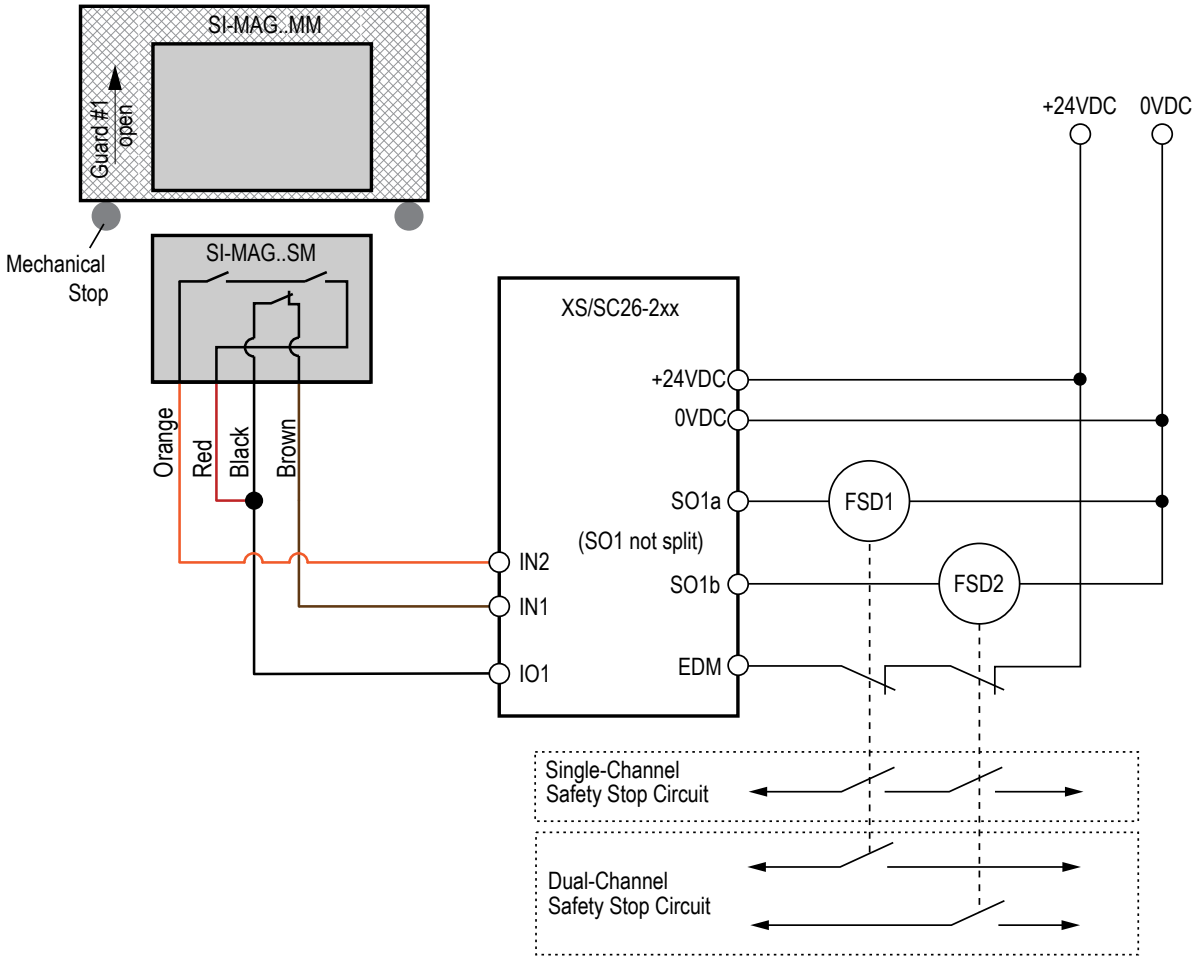

IMPORTANT: If the model number of the magnetic switch does not include a letter between the SI-MAG and the number, the orange wire shown is blue and the red wire is gray on older models.

Wiring Magnetic Switches in Series

To monitor several moveable safety guards with a series connection of more than one SI-MAG Safety Switch, follow these steps.

1. On the first switch, connect the black wire to the red (gray on older units) wire and then connect these wires to the voltage supply terminal of the safety evaluation module.
2. Connect the NC contacts in series.
    a. Connect the brown wire of one switch to the black wire of the next switch.
    b. Connect the brown wire of the last switch to the NC input of the safety evaluation module.
3. Connect the NO contacts in parallel.
    a. Connect together the red (gray on older units) wire of all the switches.
    b. Connect together the orange (blue on older units) wires.
    c. Connect the red wires with the black wire of the first switch to the voltage supply terminal of the safety evaluation module.
    d. Connect the orange wires to the NO input terminal of the safety evaluation module.

© Banner Engineering Corp. All rights reserved.
www.bannerengineering.com

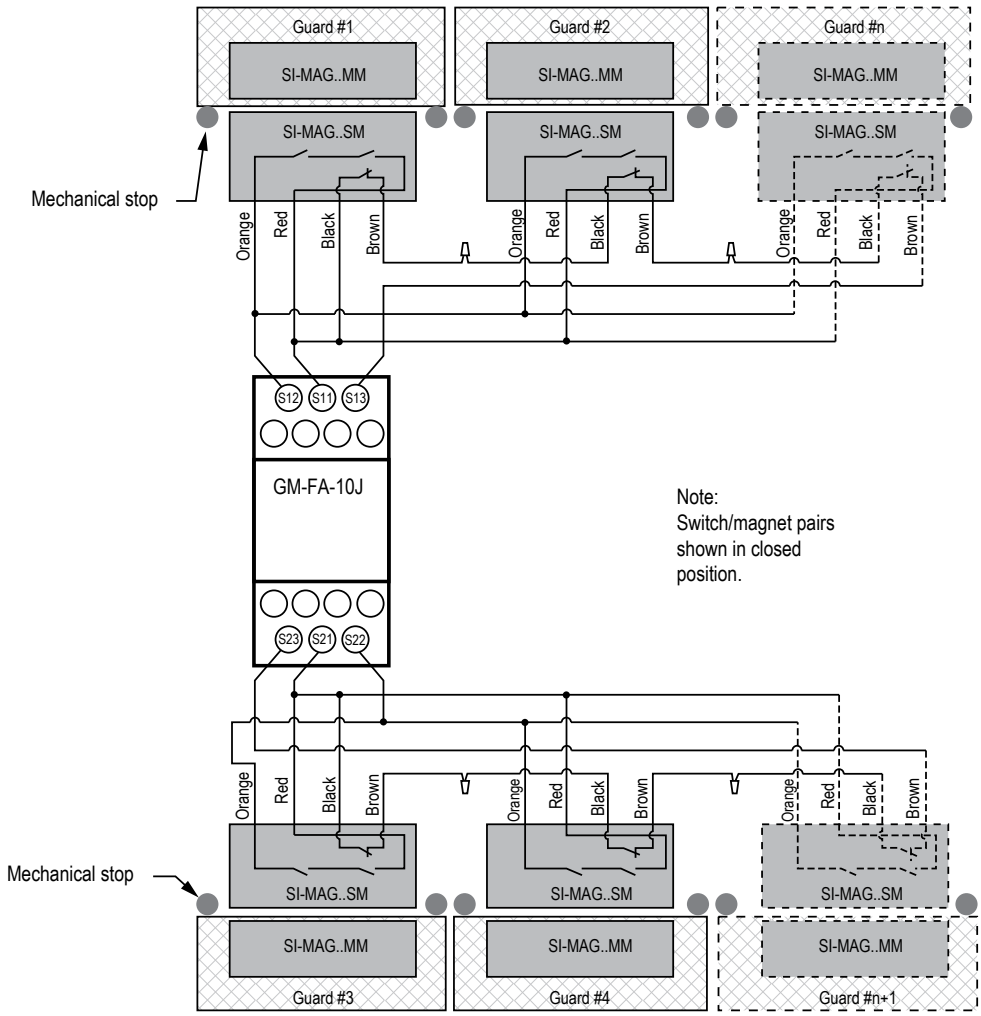

IMPORTANT: If the model number of the magnetic switch does not include a letter between the SI-MAG and the number, the orange wire shown is blue and the red wire is gray on older models.

Wiring for Quick Disconnect Magnetic Switches

4-pin M12 Male Connector	4-pin M8 Male Connector	Key	SI-MAG Wiring
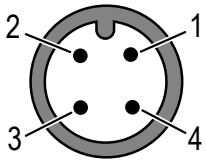	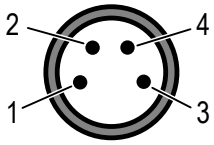	1. Brown 2. Red 3. Orange 4. Black	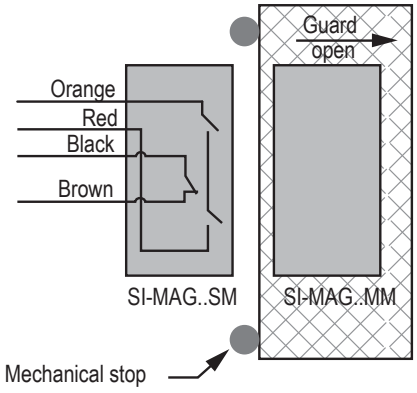

© Banner Engineering Corp. All rights reserved.
www.bannerengineering.com

Chapter Contents

Chapter 3 Accessories

The Magnetic Safety Interlock Switches are contact-based devices. To perform their safety function these switches need to be connected to an appropriate safety monitoring device like a GM-FA-10J, SC26, or XS26.

Safety controller models

Non-Expandable Models	Expandable Models	Description
SC26-2	**XS26-2**	26 convertible I/O and 2 redundant solid-state safety outputs
SC26-2d	**XS26-2d**	26 convertible I/O and 2 redundant solid-state safety outputs with display
SC26-2e	**XS26-2e**	26 convertible I/O and 2 redundant solid-state safety outputs with Ethernet
SC26-2de	**XS26-2de**	26 convertible I/O and 2 redundant solid-state safety outputs with display and Ethernet
SC10-2roe		10 inputs, 2 redundant relay safety outputs (3 contacts each) (ISD and Ethernet compatible)
	XS26-ISDd	26 inputs, 2 redundant solid-state safety outputs with display, Ethernet, and 8 ISD channels

Model	Description
GM-FA-10J	Single or dual channel switch monitoring, 2 normally open (N.O.) redundant-output 6 amp contacts

4-pin Single-Ended M8 Female Cordsets (datasheet p/n 236623)				
Model	**Length**	**Dimensions (mm)**	**Pinout (Female)**	
BC-M8F4-24-0.5	0.5 m (1.64 ft)	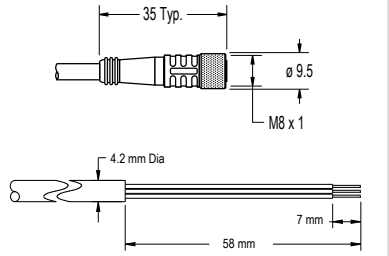	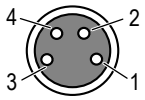	1 = Brown 2 = White 3 = Blue 4 = Black
BC-M8F4-24-1	1 m (3.28 ft)			
BC-M8F4-24-2	2 m (6.56 ft)			
BC-M8F4-24-5	5 m (16.4 ft)			
BC-M8F4-24-8	8 m (26.25 ft)			
BC-M8F4-24-10	10 m (30.81 ft)			

4-pin Single-Ended M12 Female Cordsets (datasheet p/n 235937)				
Model	**Length**	**Dimensions (mm)**	**Pinout (Female)**	
BC-M12F4-22-1	1 m (3.28 ft)	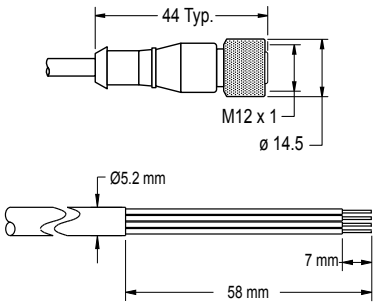	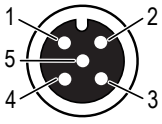	1 = Brown 2 = White 3 = Blue 4 = Black 5 = Unused
BC-M12F4-22-2	2 m (6.56 ft)			
BC-M12F4-22-5	5 m (16.4 ft)			
BC-M12F4-22-8	8 m (26.25 ft)			
BC-M12F4-22-10	10 m (30.81 ft)			
BC-M12F4-22-15	15 m (49.2 ft)			
BC-M12F4-22-20	20 m (65.61 ft)			
BC-M12F4-22-25	25 m (82.02 ft)			
BC-M12F4-22-30	30 m (98.42 ft)			

© Banner Engineering Corp. All rights reserved.
www.bannerengineering.com

4-pin Single-Ended M12 Female Right-Angle Cordsets (datasheet p/n 235937)				
Model	**Length**	**Dimensions (mm)**	**Pinout (Female)**	
BC-M12F4A-22-1	1 m (3.28 ft)	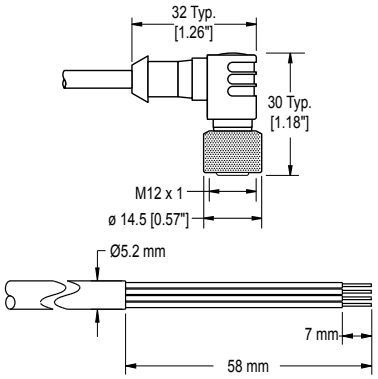	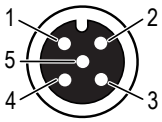	1 = Brown 2 = White 3 = Blue 4 = Black 5 = Unused c UL us LISTED
BC-M12F4A-22-2	2 m (6.56 ft)			
BC-M12F4A-22-5	5 m (16.4 ft)			
BC-M12F4A-22-8	8 m (26.25 ft)			
BC-M12F4A-22-10	10 m (30.81 ft)			
BC-M12F4A-22-15	15 m (49.2 ft)			

4-Pin Single-Ended M8 Female Cordsets					
Model	**Length**	**Style**	**Dimensions**	**Pinout (Female)**	
PKG4M-2	2 m (6.56 ft)	Straight	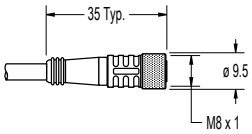	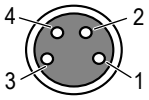	1 = Brown 2 = White 3 = Blue 4 = Black
PKG4M-5	5 m (16.4 ft)				
PKG4M-9	9 m (29.52 ft)				
PKW4M-2	2 m (6.56 ft)	Right Angle	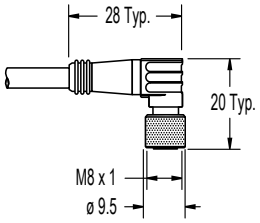	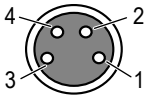	
PKW4M-5	5 m (16.4 ft)				
PKW4M-9	9 m (29.5 ft)				

© Banner Engineering Corp. All rights reserved.
www.bannerengineering.com

Chapter Contents

Repairs and Translations (No Field-Replaceable Parts) 17
Contact Us 19
EU/UK Declaration of Conformity (DoC) 19
Banner Engineering Corp Limited Warranty 20

Chapter 4 Product Support and Maintenance

Repairs and Translations (No Field-Replaceable Parts)

English

Contact Banner Engineering for troubleshooting of this device. **Do not attempt any repairs to this Banner device; it contains no field-replaceable parts or components.** If the device, device part, or device component is determined to be defective by a Banner Applications Engineer, they will advise you of Banner's RMA (Return Merchandise Authorization) procedure.

```
IMPORTANT: If instructed to return the device, pack it with care. Damage that occurs in return shipping is not covered by warranty.
```

Obtain assistance with product repairs by contacting your local Banner Engineering Corp distributor or by calling Banner directly at (763) 544-3164. Access literature translated into your native language on the Banner website at www.bannerengineering.com or contact Banner directly at (763) 544-3164.

Deutsch

Wenden Sie sich zur Fehlerbehebung dieses Geräts an Banner Engineering. **Versuchen Sie nicht, Reparaturen an diesem Banner-Gerät vorzunehmen. Das Gerät enthält keine am Einsatzort auszuwechselnden Teile oder Komponenten.** Wenn ein Banner-Anwendungstechniker zu dem Schluss kommt, dass dieses Gerät, ein Teil oder eine Komponente davon defekt ist, erhalten Sie von dem Techniker Erläuterungen zu Banners RMA-Verfahren (Return Merchandise Authorization) für die Warenrückgabe.

```
WICHTIG: Wenn Sie der Techniker anweist, das Gerät zurückzusenden, verpacken Sie es bitte sorgfältig. Transportschäden bei der Rücksendung werden von der Garantie nicht abgedeckt.
```

Unterstützung bei Produktreparaturen erhalten Sie von Ihrem örtlichen Banner Engineering Corp Händler oder direkt von Banner unter Tel. (763) 544-3164. Die in Ihre Muttersprache übersetzte Literatur finden Sie auf der Banner-Website unter www.bannerengineering.com oder kontaktieren Sie Banner direkt unter Tel. (763) 544-3164.

Français

Pour plus d'informations sur le dépannage du produit, contactez Banner Engineering. **Ne tentez pas de réparer ce dispositif Banner. Il ne contient aucun composant ou pièce qui puisse être remplacé sur place.** Si un ingénieur de Banner conclut que le dispositif ou l'une de ses pièces ou composants est défectueux, il vous informera de la procédure à suivre pour le retour des produits (RMA).

```
Important : Si vous devez retourner le dispositif, emballez-le avec soin. Les dégâts occasionnés pendant le transport de retour ne sont pas couverts par la garantie.
```

Pour vous aider lors de la réparation de produits, contactez votre distributeur Banner local our appelez directement Banner au (763) 544-3164. La documentation traduite dans votre langue est disponible sur le site internet de Banner www.bannerengineering.com ou contactez directement Banner au (763) 544-3164.

Italiano

Per le procedure di individuazione e riparazione dei guasti di questo dispositivo, contattare Banner Engineering. **Non tentare di riparare questo dispositivo Banner, in quanto non contiene parti o componenti sostituibili dall'utente.** Se il dispositivo, una parte del dispositivo o un componente del dispositivo viene riscontrato difettoso da un tecnico Banner, il nostro personale vi comunicherà la procedura da seguire per ottenere l'autorizzazione al reso.

```
Importante: Se si ricevono istruzioni di rispedire il dispositivo al produttore, imballarlo con cura. I danni dovuti al trasporto non sono coperti dalla garanzia.
```

Per assistenza nelle riparazioni dei prodotti, contattare il distributore locale Banner Engineering Corp o contattare direttamente Banner al numero (763) 544-3164. È possibile accedere alla documentazione tradotta nella propria lingua madre sul sito Web Banner all'indirizzo www.bannerengineering.com o contattare direttamente Banner al numero (763) 544-3164.

© Banner Engineering Corp. All rights reserved.
www.bannerengineering.com

Español

Comuníquese con Banner Engineering para solucionar de problemas de este dispositivo. **No intente ninguna reparación a este dispositivo de Banner, contiene piezas o componente que no se pueden cambiar en terreno.** Si algún ingeniero de aplicaciones de Banner determina que el dispositivo, alguna de las piezas o alguno de los componentes del dispositivo está defectuoso, le informará el procedimiento de autorización de devolución de mercancía (RMA, por sus siglas en inglés) de Banner.

Importante: Si se le solicita devolver el dispositivo, empáquelo con cuidado. Puede haber daños durante el envío de devolución que no estén cubiertos por la garantía.

Para reparaciones de productos, por favor contacte a su distribuidor local de Banner Engineering o llame a Banner directamente al 00 1 (763) 544-3164. Vea la literatura traducida en su idioma en el sitio web Banner en www.bannerengineering.com o comuníquese con Banner directamente al 00 1 (763) 544-3164.

中国人

如需对本装置进行故障排查，请联系邦纳。**请勿尝试自行维修该邦纳装置；本装置不包含任何可在现场更换的部件或组件。** 若经邦纳应用工程师确认设备、设备部件或组件存在缺陷，他们将告知您邦纳退货授权 (RMA) 流程。

重要注意事项： 如被要求退回装置，请妥善包装后寄回。退货运输过程中发生的损坏不在保修范围内。

请联系当地的 Banner Engineering Corp 经销商或直接致电 Banner +1 (763) 544-3164，以获得产品维修帮助。请访问邦纳网站 www.bannerengineering.com 或直接拨打 +1 (763) 544-3164 联系邦纳，获取翻译成您母语的资料。

한국인

이 장치의 문제를 해결하려면 Banner Engineering에 문의하십시오. **이 Banner 장치에는 현장에서 교체할 수 있는 부품 또는 구성품이 없으므로 수리를 시도하지 마십시오.** Banner 애플리케이션 엔지니어가 장치, 장치 부품 또는 장치 구성품에 결함이 있는 것으로 판정하면, Banner의 RMA(제품 반송 승인)절차에 대해 안내해 드립니다.

중요: 제품을 반송하도록 안내 받으셨다면 잘 포장해주십시오. 반송 도중에 발생한 손상은 보증 서비스가 적용되지 않습니다.

제품 수리에 대한 지원은 지역 Banner Engineering Corp 대리점에 문의하거나 Banner에 직접 (763) 544-3164로 문의하실 수 있습니다. 사용자의 모국어로 번역된 자료는 Banner 웹사이트 www.bannerengineering.com에서 액세스하거나 Banner에 직접 (763) 544-3164로 문의하실 수 있습니다.

日本語

この装置のトラブルシューティングについては、バナーエンジニアリングにお問い合わせください。**このバナー装置には、現場では交換できない部品またはコンポーネントが含まれているため、修理を試みてはいけません。** バナーのアプリケーションエンジニアが装置、装置の部品、または装置のコンポーネントに欠陥があると判断した場合、バナーのRMA（返品承認）手続きについてお知らせします。

重要 ： 返品を指示された場合は、装置を丁寧に梱包してください。返品時に発生した破損は保証の対象外となります。

製品の修理については、最寄りのBanner Engineering Corp代理店にお問い合わせいただくか、米国+1 (763) 544-3164まで直接お電話でお問い合わせください。バナーのウェブサイト（www.bannerengineering.com）でお客様の言語に翻訳された資料にアクセスするか、米国+1 (763) 544-3164まで直接お電話でお問い合わせください。

čeština

Pro řešení problémů se zařízením kontaktujte společnost Banner Engineering. **Neprovádějte žádné opravy zařízení Banner. Neobsahují žádné komponenty nebo části, které by byly vyměnitelné.** Pokud je zařízení, jeho část nebo díl označen technikem společnosti Banner jako poškozený, bude Vám doporučeno vyplnit reklamační RMA protokol.

Důležité: Pokud byl vydán požadavek na vrácení zařízení, pečlivě ho zabalte. Poškození vzniklé při dopravě není považováno za záruční opravu.

Pokud produkt potřebuje opravu, vyžádejte si pomoc od místního distributora společnosti Banner Engineering Corp nebo přímo na telefonním čísle (763) 544-3164. Dokumentaci přeloženou do vašeho jazyka si vyhledejte na webových stránkách společnosti Banner na adrese www.bannerengineering.com nebo se obraťte přímo na společnost Banner na telefonním čísle (763) 544-3164.

© Banner Engineering Corp. All rights reserved.

Polski

W celu rozwiązania problemów z urządzeniem należy skontaktować się z działem technicznym firmy Banner Engineering. **Pod żadnym pozorem nie próbuj naprawiać tego urządzenia firmy Banner; nie zawiera ono części ani elementów, które można wymieniać samodzielnie.** Jeśli urządzenie, jego część lub element zostaną uznane za wadliwe przez inżyniera technicznego Banner, poinformuje on użytkownika o firmowej procedurze zwrotu towaru (RMA) firmy Banner.

```
Ważne: Jeśli urządzenie ma zostać zwrócone, należy je starannie zapakować. Uszkodzenia powstałe
podczas odsyłki nie są objęte gwarancją.
```

Aby uzyskać pomoc w zakresie naprawy produktu, należy skontaktować się z lokalnym dystrybutorem Banner Engineering Corp lub zadzwonić bezpośrednio do firmy Banner pod numer (763) 544-3164. Dostęp do literatury przetłumaczonej na swój język ojczysty można uzyskać na stronie internetowej firmy Banner pod adresem www.bannerengineering.com lub kontaktując się bezpośrednio z firmą Banner pod numerem (763) 544-3164.

Português

Entre em contato com a Engenharia da Banner para a solução de problemas deste dispositivo. **Não tente fazer nenhum reparo neste dispositivo Banner; ele não contém peças ou componentes substituíveis em campo.** Se um técnico de aplicações da Banner determinar que o dispositivo, peça ou componente do dispositivo está com defeito, ele o informará sobre o procedimento de RMA (Autorização de Devolução de Mercadoria) da Banner.

```
Importante: Se for instruído a devolver o dispositivo, embale-o com cuidado. Os danos ocorridos
no transporte de devolução não são cobertos pela garantia.
```

Obtenha assistência para reparos do produto entrando em contato com o distribuidor local da Banner Engineering Corp ou ligando diretamente para a Banner no telefone (763) 544-3164. Acesse a literatura traduzida para seu idioma nativo no site da Banner em www.bannerengineering.com ou entre em contato diretamente com a Banner pelo telefone (763) 544-3164.

Türkçe

Bu cihazda sorun giderme işlemleri için Banner Engineering ile iletişime geçin. **Bu Banner cihazını onarmaya çalışmayın; cihaz sahada değiştirilebilir parça veya bileşen içermez.** Bir Banner Uygulama Mühendisi tarafından cihazın, cihazın bir parçasının veya bir cihaz bileşeninin kusurlu olduğu tespit edilirse, Banner RMA (İade Mal Yetkilendirme) prosedürü hakkında bilgilendirilirsiniz.

```
ÖNEMLİ: İade etmeniz istenirse, cihazı dikkatli bir şekilde paketleyin. İade nakliyesinde
meydana gelecek hasarlar garanti kapsamında değildir.
```

Yerel Banner Engineering Corp distribütörünüzle iletişime geçerek veya doğrudan (763) 544-3164 numaralı telefondan Banner'ı arayarak ürün onarımlarıyla ilgili yardım alın. Ana dilinize çevrilmiş dokümanlara www.bannerengineering.com adresindeki Banner web sitesinden erişebilir veya (763) 544-3164 numaralı telefondan doğrudan Banner ile iletişime geçebilirsiniz.

Contact Us

Banner Engineering Corp. | 9714 Tenth Avenue North | Plymouth, MN 55441, USA | Phone: + 1 888 373 6767

For worldwide locations and local representatives, visit www.bannerengineering.com.

EU/UK Declaration of Conformity (DoC)

Banner Engineering Corp. herewith declares that these products are in conformity with the provisions of the listed directives and all essential health and safety requirements have been met. For the complete DoC, please go to www.bannerengineering.com.

Product	Directive
SI-MAG Non-Contact Magnetic Safety Interlock Switch	EU: Machinery Directive 2006/42/EC
	UKCA: Machinery (Safety) Regulations 2008

Representative in EU: Spiros Lachandidis, Managing Director, **Banner Engineering BV** Park Lane | Culliganlaan 2F bus 3 | 1831 Diegem, BELGIUM

Representative in UK: Tony Coghlan, Managing Director, **Turck Banner LTD** Blenheim House | Blenheim Court | Wickford, Essex SS11 8YT | Great Britain

© Banner Engineering Corp. All rights reserved.
www.bannerengineering.com

Banner Engineering Corp Limited Warranty

Banner Engineering Corp. warrants its products to be free from defects in material and workmanship for one year following the date of shipment. Banner Engineering Corp. will repair or replace, free of charge, any product of its manufacture which, at the time it is returned to the factory, is found to have been defective during the warranty period. This warranty does not cover damage or liability for misuse, abuse, or the improper application or installation of the Banner product.

THIS LIMITED WARRANTY IS EXCLUSIVE AND IN LIEU OF ALL OTHER WARRANTIES WHETHER EXPRESS OR IMPLIED (INCLUDING, WITHOUT LIMITATION, ANY WARRANTY OF MERCHANTABILITY OR FITNESS FOR A PARTICULAR PURPOSE), AND WHETHER ARISING UNDER COURSE OF PERFORMANCE, COURSE OF DEALING OR TRADE USAGE.

This Warranty is exclusive and limited to repair or, at the discretion of Banner Engineering Corp., replacement. **IN NO EVENT SHALL BANNER ENGINEERING CORP. BE LIABLE TO BUYER OR ANY OTHER PERSON OR ENTITY FOR ANY EXTRA COSTS, EXPENSES, LOSSES, LOSS OF PROFITS, OR ANY INCIDENTAL, CONSEQUENTIAL OR SPECIAL DAMAGES RESULTING FROM ANY PRODUCT DEFECT OR FROM THE USE OR INABILITY TO USE THE PRODUCT, WHETHER ARISING IN CONTRACT OR WARRANTY, STATUTE, TORT, STRICT LIABILITY, NEGLIGENCE, OR OTHERWISE.**

Banner Engineering Corp. reserves the right to change, modify or improve the design of the product without assuming any obligations or liabilities relating to any product previously manufactured by Banner Engineering Corp. Any misuse, abuse, or improper application or installation of this product or use of the product for personal protection applications when the product is identified as not intended for such purposes will void the product warranty. Any modifications to this product without prior express approval by Banner Engineering Corp will void the product warranties. All specifications published in this document are subject to change; Banner reserves the right to modify product specifications or update documentation at any time. Specifications and product information in English supersede that which is provided in any other language. For the most recent version of any documentation, refer to: www.bannerengineering.com.

For patent information, see www.bannerengineering.com/patents.

© Banner Engineering Corp. All rights reserved.

LinkedIn

X

Facebook

Instagram



© 2026. All rights reserved.