S15C Analog Voltage to IO-Link Device Converter

more sensors, more solutions

Datasheet



- Compact analog voltage to IO-Link device converter that connects to a voltage source (0 V to 10 V) and outputs the value to the IO-Link master
- Rugged over-molded design meets IP65, IP67, and IP68
- Connects directly to a sensor or anywhere in-line for ease of use

Models

Housing	Function		Female		Male	Connector
S15	C	-	U	-	K	Q
	C = Converter		U = Analog Voltage		K = IO-Link	Q = Integral M12 quick disconnect

IO-Link®

IO-Link® is a point-to-point communication link between a master device and a sensor and/or light. It can be used to automatically parameterize sensors or lights and to transmit process data. For the latest IO-Link protocol and specifications, please visit www.io-link.com.

For the latest IODD files, please refer to the Banner Engineering Corp website at: www.bannerengineering.com.

Configuration

The measured voltage value is available via Process Data In as the measured value in mV.

For more information, see Banner P/N 217418 *S15C Analog Converter (Voltage and Current) - IO-Link Data Reference Guide* and Banner P/N 217417 *S15C-U/I-KQ IODD Files*.

Wiring Diagrams

Male	Female	Pin	Wire Color
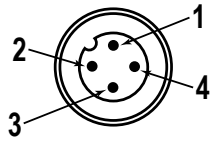	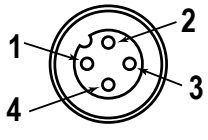	1	Brown
		2	White
		3	Blue
		4	Black

Female (Sensor)	Signal Description
Pin 1	18 V DC to 30 V DC
Pin 2	Analog In
Pin 3	Ground
Pin 4	Not Used

Important: A shielded cable is required on the female (sensor) side, with the shield tied to the blue wire.

Original Document
217591 Rev. C

17 June 2022

217591

ПРОМЭЛЕКТРОНИКА/ sales@prom-elec.com

Male (IO-Link Master)	Signal Description
Pin 1	18 V DC to 30 V DC
Pin 2	Banner-specific
Pin 3	Ground
Pin 4	IO-Link

Status Indicators

Power LED Indicator (Green)

- Solid Green = Power On
- Off = Power Off

IO-Link Communication LED Indicator (Amber)

- Flashing Amber (900 ms On, 100 ms Off) = IO-Link communications are active
- Off = IO-Link communications are not present

Analog Communication LED Indicator (Amber)

- Solid Amber = Analog voltage value is between setpoint SP1 AND setpoint SP2
- Off = Analog voltage value is less than setpoint SP1 OR analog value is greater than setpoint SP2
- Default Values [1]:
  - SP1 = 0 V
  - SP2 = 10 V

Specifications

Supply Voltage
18 V DC to 30 V DC at 50 mA maximum

Power Pass-Through Current
1 A maximum

Analog Input Impedance
Approximately 14.3K ohms

Supply Protection Circuitry
Protected against reverse polarity and transient voltages

Leakage Current Immunity
400 µA

Resolution
13-bits

Accuracy
0.5%

Indicators
Green power
Amber IO-Link communications
Amber analog value present

Connections
Integral male/female 4-pin M12/Euro-style quick disconnect

Construction
Coupling Material: Nickel-plated brass
Connector Body: PVC translucent black

Vibration and Mechanical Shock
Meets IEC 60068-2-6 requirements (Vibration: 10 Hz to 55 Hz, 0.5 mm amplitude, 5 minutes sweep, 30 minutes dwell)
Meets IEC 60068-2-27 requirements (Shock: 15G 11 ms duration, half sine wave)

Certifications

Banner Engineering Europe
Park Lane, Culliganlaan 2F bus 3, 1831 Diegem, BELGIUM

Turck Banner LTD Blenheim House, Blenheim Court, Wickford, Essex SS11 8YT, Great Britain

Environmental Rating
IP65, IP67, IP68
NEMA/UL Type 1

Operating Conditions
Temperature: –40 °C to +70 °C (–40 °F to +158 °F)
90% at +70 °C maximum relative humidity (non-condensing)
Storage Temperature: –40 °C to +80 °C (–40 °F to +176 °F)

Required Overcurrent Protection

WARNING: Electrical connections must be made by qualified personnel in accordance with local and national electrical codes and regulations.

Overcurrent protection is required to be provided by end product application per the supplied table.
Overcurrent protection may be provided with external fusing or via Current Limiting, Class 2 Power Supply.
Supply wiring leads < 24 AWG shall not be spliced.
For additional product support, go to www.bannerengineering.com.

Supply Wiring (AWG)	Required Overcurrent Protection (Amps)
20	5.0
22	3.0
24	2.0
26	1.0
28	0.8
30	0.5

[1] SP1 and SP2 values are IO-Link read/write parameters.

Dimensions

All measurements are listed in millimeters [inches], unless noted otherwise.

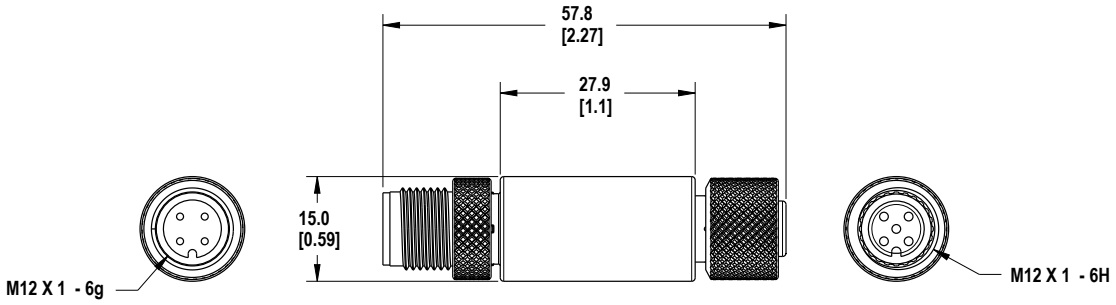

Accessories

Cordsets

4-Pin Threaded M12 Cordsets—Double Ended				
Model	**Length**	**Style**	**Dimensions**	**Pinout**
MQDEC-401SS	0.31 m (1 ft)	Male Straight/ Female Straight	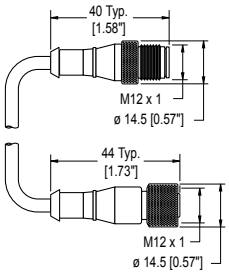	Female 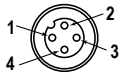 Male 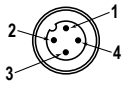 1 = Brown 2 = White 3 = Blue 4 = Black
MQDEC-403SS	0.91 m (2.99 ft)			
MQDEC-406SS	1.83 m (6 ft)			
MQDEC-412SS	3.66 m (12 ft)			
MQDEC-420SS	6.10 m (20 ft)			
MQDEC-430SS	9.14 m (30.2 ft)			
MQDEC-450SS	15.2 m (49.9 ft)			

Banner Engineering Corp Limited Warranty

Banner Engineering Corp. warrants its products to be free from defects in material and workmanship for one year following the date of shipment. Banner Engineering Corp. will repair or replace, free of charge, any product of its manufacture which, at the time it is returned to the factory, is found to have been defective during the warranty period. This warranty does not cover damage or liability for misuse, abuse, or the improper application or installation of the Banner product.

THIS LIMITED WARRANTY IS EXCLUSIVE AND IN LIEU OF ALL OTHER WARRANTIES WHETHER EXPRESS OR IMPLIED (INCLUDING, WITHOUT LIMITATION, ANY WARRANTY OF MERCHANTABILITY OR FITNESS FOR A PARTICULAR PURPOSE), AND WHETHER ARISING UNDER COURSE OF PERFORMANCE, COURSE OF DEALING OR TRADE USAGE.

This Warranty is exclusive and limited to repair or, at the discretion of Banner Engineering Corp., replacement. **IN NO EVENT SHALL BANNER ENGINEERING CORP. BE LIABLE TO BUYER OR ANY OTHER PERSON OR ENTITY FOR ANY EXTRA COSTS, EXPENSES, LOSSES, LOSS OF PROFITS, OR ANY INCIDENTAL, CONSEQUENTIAL OR SPECIAL DAMAGES RESULTING FROM ANY PRODUCT DEFECT OR FROM THE USE OR INABILITY TO USE THE PRODUCT, WHETHER ARISING IN CONTRACT OR WARRANTY, STATUTE, TORT, STRICT LIABILITY, NEGLIGENCE, OR OTHERWISE.**

Banner Engineering Corp. reserves the right to change, modify or improve the design of the product without assuming any obligations or liabilities relating to any product previously manufactured by Banner Engineering Corp. Any misuse, abuse, or improper application or installation of this product or use of the product for personal protection applications when the product is identified as not intended for such purposes will void the product warranty. Any modifications to this product without prior express approval by Banner Engineering Corp will void the product warranties. All specifications published in this document are subject to change; Banner reserves the right to modify product specifications or update documentation at any time. Specifications and product information in English supersede that which is provided in any other language. For the most recent version of any documentation, refer to: www.bannerengineering.com.

For patent information, see www.bannerengineering.com/patents.

FCC Part 15

This device complies with Part 15 of the FCC Rules. This equipment generates, uses, and can radiate radio frequency energy and, if not installed and used in accordance with the instruction manual, may cause harmful interference to radio communications. Operation is subject to the following two conditions: 1) This device may not cause harmful interference; and 2) This device must accept any interference received, including interference that may cause undesired operation.

Industry Canada

This device complies with CAN ICES-3 (B)/NMB-3(B). Operation is subject to the following two conditions: 1) This device may not cause harmful interference; and 2) This device must accept any interference received, including interference that may cause undesired operation.

Cet appareil est conforme à la norme NMB-3(B). Le fonctionnement est soumis aux deux conditions suivantes : (1) ce dispositif ne peut pas occasionner d'interférences, et (2) il doit tolérer toute interférence, y compris celles susceptibles de provoquer un fonctionnement non souhaité du dispositif.

© Banner Engineering Corp. All rights reserved