ECONO-BEAM™ Model SE612CX

Datasheet

Miniature Self-Contained Convergent Mode Photoelectric Sensor

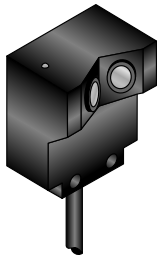

The Banner model SE612CX ECONO-BEAM is a miniature modulated DC sensor engineered to provide reliable sensing performance primarily in OEM applications where optical contrast is high and where low cost is important. ECONO-BEAM sensors are totally self-contained: no external amplification is required. ECONO-BEAMs employ state-of-the-art SMD circuitry which is totally solid-state and epoxy-encapsulated for unlimited life.

The SE612CX is a mechanical convergent beam sensor that detects an object by sensing its own light reflected by the object. The light source and receiver opto-elements are positioned in the housing so that sensing takes place in the area where the optical patterns cross. The sensing beam is intense at the 12.7 mm (0.5 in) convergent point. This enables the SE612CX to sense materials of low reflectivity such as wire or thread. Mechanical convergence is also effective for reflective sensing in applications where background suppression is required.

The output configuration of this sensor offers both NPN and PNP transistor switches, each rated at 150 mA.

Leakage current and saturation voltage are both very low for easy interfacing to PLCs and other solid state circuitry, including Banner logic modules (see hookup information). ECONO-BEAMs are protected against false pulse on power-up and voltage polarity reversal. A red indicator LED on top of the sensor lights whenever the ECONO-BEAM senses its own modulated light.

ECONO-BEAMs are constructed in molded polycarbonate housings and meet NEMA 1, 3, 4, 12, and 13 ratings.

Wiring Diagram

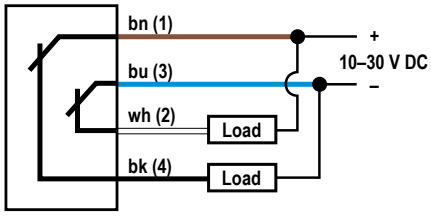

Specifications

Supply Voltage
10 V DC to 30 V DC (10% max. ripple) at less than 20 mA, exclusive of load

Output Configuration
One NPN and one PNP open collector transistor
Outputs conduct when the sensor sees a light condition (LIGHT OPERATE)
DARK OPERATE output is available by special order

Output Rating
150 mA each output
OFF-state leakage current less than 1 µA
Output saturation voltage (NPN output) less than 200 mV at 10 mA and less than 1 V at 150 mA
Output saturation voltage (PNP output) less than 1 V at 10 mA and less than 2 V at 150 mA

Circuit Protection
Protected against reverse polarity and false pulse on power up

Response Time
Less than 10 ms ON and OFF

Note: There is a 100 ms delay on power-up. Sensor outputs are non-conducting during this time.

Repeatability
0.4 ms

Beam
Infrared, 880 nm

Focus Point
12.7 mm (0.5 in) in front of the lens

Indicator LED
Top-mounted red LED indicator lights whenever the sensor sees its modulated light source

Construction
Totally encapsulated in housing of molded or polycarbonate for protection against moisture, vibration, and corrosion

Environmental Rating
NEMA 1, 3, 4, 12, 13

Cable
1.83 m (6 ft) unterminated 4-wire PVC-jacketed cable

Operating Temperature
0 °C to +50 °C (+32 °F to +122 °F)

Original Document
30158 Rev. A

21 September 2020

30158

ПРОМЭЛЕКТРОНИКА/ sales@prom-elec.com

Performance Curves

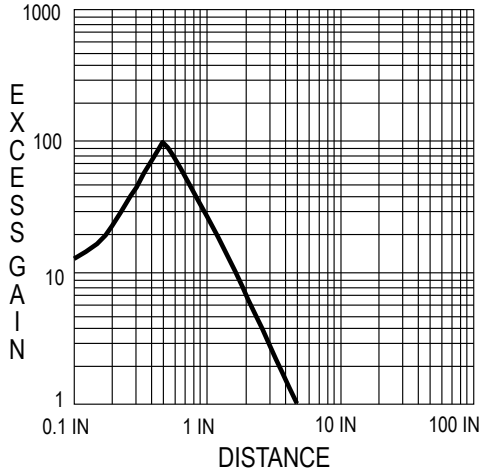

Dimensions

All measurements are listed in millimeters [inches], unless noted otherwise.

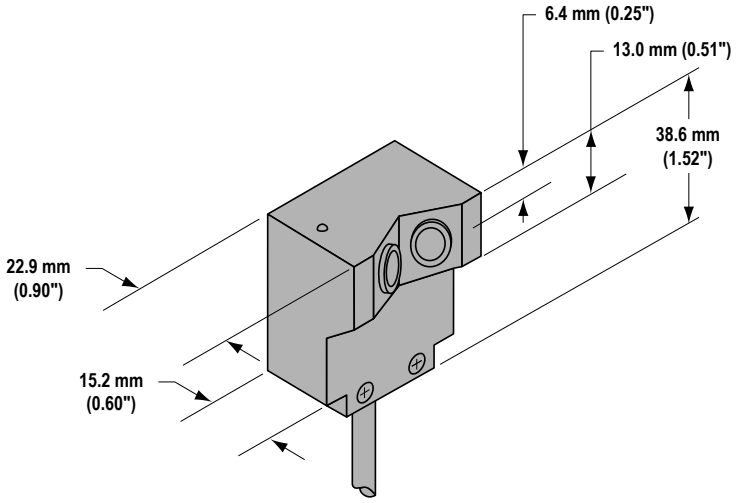

Banner Engineering Corp Limited Warranty

Banner Engineering Corp. warrants its products to be free from defects in material and workmanship for one year following the date of shipment. Banner Engineering Corp. will repair or replace, free of charge, any product of its manufacture which, at the time it is returned to the factory, is found to have been defective during the warranty period. This warranty does not cover damage or liability for misuse, abuse, or the improper application or installation of the Banner product.

THIS LIMITED WARRANTY IS EXCLUSIVE AND IN LIEU OF ALL OTHER WARRANTIES WHETHER EXPRESS OR IMPLIED (INCLUDING, WITHOUT LIMITATION, ANY WARRANTY OF MERCHANTABILITY OR FITNESS FOR A PARTICULAR PURPOSE), AND WHETHER ARISING UNDER COURSE OF PERFORMANCE, COURSE OF DEALING OR TRADE USAGE.

This Warranty is exclusive and limited to repair or, at the discretion of Banner Engineering Corp., replacement. **IN NO EVENT SHALL BANNER ENGINEERING CORP. BE LIABLE TO BUYER OR ANY OTHER PERSON OR ENTITY FOR ANY EXTRA COSTS, EXPENSES, LOSSES, LOSS OF PROFITS, OR ANY INCIDENTAL, CONSEQUENTIAL OR SPECIAL DAMAGES RESULTING FROM ANY PRODUCT DEFECT OR FROM THE USE OR INABILITY TO USE THE PRODUCT, WHETHER ARISING IN CONTRACT OR WARRANTY, STATUTE, TORT, STRICT LIABILITY, NEGLIGENCE, OR OTHERWISE.**

Banner Engineering Corp. reserves the right to change, modify or improve the design of the product without assuming any obligations or liabilities relating to any product previously manufactured by Banner Engineering Corp. Any misuse, abuse, or improper application or installation of this product or use of the product for personal protection applications when the product is identified as not intended for such purposes will void the product warranty. Any modifications to this product without prior express approval by Banner Engineering Corp will void the product warranties. All specifications published in this document are subject to change; Banner reserves the right to modify product specifications or update documentation at any time. Specifications and product information in English supersede that which is provided in any other language. For the most recent version of any documentation, refer to: www.bannerengineering.com.

For patent information, see www.bannerengineering.com/patents.

© Banner Engineering Corp. All rights reserved