MultiHop HB2 Data Radio Board Module

Features

Sure Cross® MultiHop embeddable board devices provide connectivity where traditional wired connections are not possible or are cost-prohibitive.



- Wireless industrial module with two PNP discrete inputs, two PNP discrete outputs, two 0 to 20 mA analog inputs, and two 0 to 20 mA analog outputs
- Selectable transmit power levels of 250 mW or 500 mW for 900 MHz models and 65 mW for 2.4 GHz models
- 10 V DC to 30 V DC power input
- Self-healing, auto-routing radio frequency network with multiple hops extends the network's range and improves radio link performance
- Serial and I/O communication on a Modbus platform
- Message routing improves link performance
- DIP switches select operational modes: client, repeater, or server
- Frequency Hopping Spread Spectrum (FHSS) technology ensures reliable data delivery

Models

Model	Antenna Connection	Frequency	I/O
DX80DR9M-HB2	Ext. Reverse Polarity SMA, 50 Ohms	900 MHz ISM Band	Inputs: Two PNP discrete, two 0 to 20 mA analog Outputs: Two PNP discrete, two 0 to 20 mA analog
DX80DR2M-HB2		2.4 GHz ISM Band	

The following models are no longer available for order, but are still covered by the information in this document.

Model	Antenna Connection	Frequency	I/O
DX80DR9MU-HB2	U.FL-R-SMT.(01)	900 MHz ISM Band	Inputs: Two PNP discrete, two 0 to 20 mA analog Outputs: Two PNP discrete, two 0 to 20 mA analog
DX80DR2MU-HB2		2.4 GHz ISM Band	

Configuration Instructions

Set Up Your MultiHop Network

To set up and install your wireless MultiHop network, follow these steps:

1. If your radios have DIP switches, configure the DIP switches of all devices.
2. Connect the sensors to the MultiHop radios if applicable.
3. Apply power to all devices.
4. If your MultiHop radio has rotary dials, set the MultiHop Radio ID. If your MultiHop radio has no rotary dials, continue to the next step.
5. Form the wireless network by binding the server and repeater radios to the client radio. If the binding instructions are not included in this datasheet, refer to the quick start guide or product manual.
6. Observe the LED behavior to verify the devices are communicating with each other.
7. Configure any I/O points to use the sensors connected to the Sure Cross devices.
8. Conduct a site survey between the MultiHop radios. If the site survey instructions are not included in this datasheet, refer to the product manual.
9. Install your wireless sensor network components. If the installation instructions are not included in this datasheet, refer to the product manual.

For additional information, refer to one of the following documents:

- MultiHop Data Radio Quick Start Guide: 152653
- MultiHop Data Radio Instruction Manual: 151317
- MultiHop Register Guide: 155289

Configure the DIP Switches

Before changing DIP switch positions, disconnect the power.[1]

Any changes made to the DIP switches are not recognized until after power is cycled to the device. For parameters not set using the DIP switches, use the configuration software to make configuration changes. For parameters set using the DIP switches, the DIP switch positions override any changes made using the configuration software.

[1] For devices powered by batteries integrated into the housing, triple-click button 2, then double-click button 2 to reset the device without removing the battery.

Original Instructions
25-Feb-25

© Banner Engineering Corp. All rights reserved.
www.bannerengineering.com

156853
p/n: 156853 Rev. M

ПРОМЭЛЕКТРОНИКА/ sales@prom-elec.com

DIP Switch Settings (MultiHop)

	Switches							
Device Settings	**1**	**2**	**3**	**4**	**5**	**6**	**7**	**8**
Serial line baud rate 19200 OR User defined receiver slots (default setting)	OFF	OFF						
Serial line baud rate 38400 OR 32 receiver slots	OFF	ON						
Serial line baud rate 9600 OR 128 receiver slots	ON	OFF						
Serial line baud rate Custom OR 4 receiver slots (default setting for E housings)	ON	ON						
Parity: None (default setting)			OFF	OFF				
Parity: Even			OFF	ON				
Parity: Odd			ON	OFF				
Disable serial (low power mode) and enable the receiver slots select for switches 1-2 (default setting for E housings)			ON	ON				
Transmit power (default setting) 900 MHz radios: 500 mW (27 dBm) 2.4 GHz radios: 65 mW (18 dBm) and 60 ms frame					OFF			
Transmit power 900 MHz radios: 250 mW (24 dBm) 2.4 GHz radios: 65 mW (18 dBm) and 40 ms frame					ON			
Application mode: Modbus (default setting)						OFF		
Application mode: Transparent						ON		
MultiHop radio setting: Repeater (default setting)							OFF	OFF
MultiHop radio setting: Client							OFF	ON
MultiHop radio setting: Server (default setting for E housings)							ON	OFF
MultiHop radio setting: Reserved							ON	ON

Application Mode

The MultiHop radio operates in either Modbus mode or transparent mode. Use the internal DIP switches to select the mode of operation. All MultiHop radios within a wireless network must be in the same mode.

Modbus mode uses the Modbus protocol for routing packets. In Modbus mode, a routing table is stored in each parent device to optimize the radio traffic. This allows for point-to-point communication in a multiple data radio network and acknowledgment/retry of radio packets. To access a radio's I/O, the radios must be running in Modbus mode.

In **transparent** application mode, all incoming packets are stored, then broadcast to all connected data radios. The data communication is packet-based and not specific to any protocol. The application layer is responsible for data integrity. For one-to-one data radios it is possible to enable broadcast acknowledgment of the data packets to provide better throughput. In transparent mode, there is no access to the radio's I/O.

Baud Rate and Parity

The baud rate (bits per second) is the data transmission rate between the device and whatever it is physically wired to. Set the parity to match the parity of the device you are wired to.

Disable Serial

Disable an unused local serial connection to reduce the power consumption of a data radio powered from the solar assembly or from batteries. All radio communications remain operational.

Receiver Slots

The number of receiver slots indicates the number of times out of 128 slots/frames the radio can transmit to its parent radio. Setting a server’s receiver slots to four reduces the total power consumption by establishing that the server can only transmit to its parent four times per 128 slots.

Transmit Power Levels/Frame Size

The 900 MHz data radios can be operated at 500 mW (27 dBm) or 250 mW (24 dBm). For most models, the default transmit power is 500 mW.

For 2.4 GHz radios, the transmit power is fixed at 65 mW (18 dBm) and DIP switch 5 is used to set the frame timing. The default position (OFF) sets the frame timing to 60 milliseconds. To increase throughput, set the frame timing to 40 milliseconds. For battery-powered devices, increasing the throughput decreases battery life.

© Banner Engineering Corp. All rights reserved.
www.bannerengineering.com

MultiHop HB2 Wiring Diagrams

Discrete Input Wiring for PNP Sensors

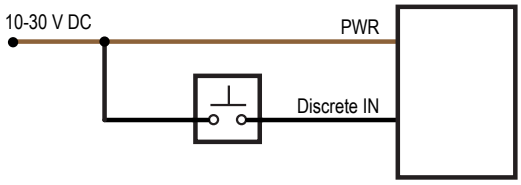

Discrete Output Wiring (PNP)

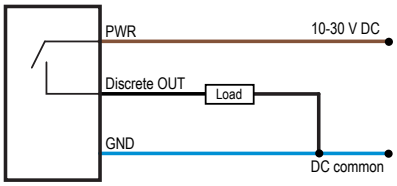

Analog Input Wiring (10–30 V DC Power)

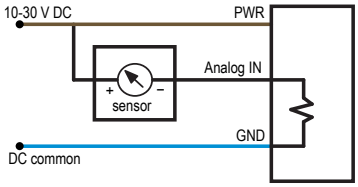

Analog Output Wiring

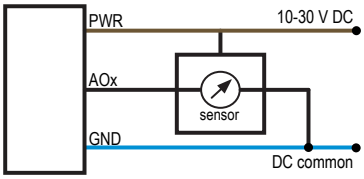

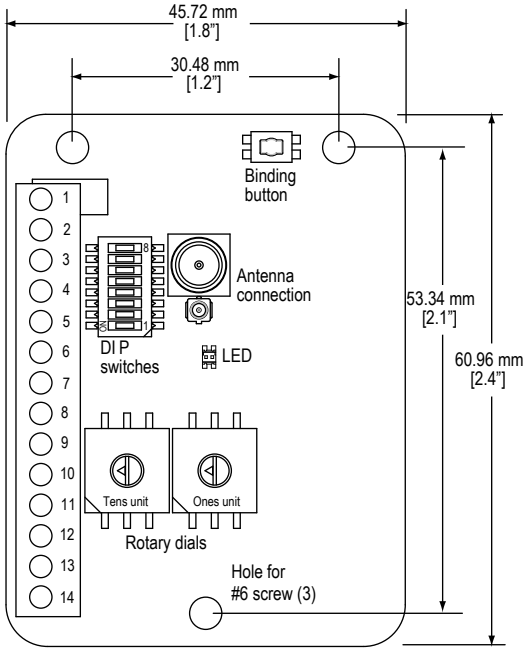

Pin	Description	Label
1	Analog IN 1 (0 to 20 mA)	AI1
2	Analog IN 2 (0 to 20 mA)	AI2
3	Discrete IN 3 (PNP)	DI3
4	Discrete IN 4 (PNP)	DI4
5	Ground	GND
6	Discrete OUT 1 (PNP)	DO1
7	Discrete OUT 2 (PNP)	DO2
8	Analog OUT 1 (0 to 20 mA)	AO1
9	Analog OUT 2 (0 to 20 mA)	AO2
10	RS-485 + Host communication connection	485+
11	RS-485 – Host communication connection	485–
12	Ground	GND
13	10 to 30 V DC	PWR
14	Not used	-

Set the MultiHop Radio ID

The Modbus ID is an identifying number used for devices within a Modbus system. When using more than one Modbus peripheral, assign each peripheral device a unique ID number.

For MultiHop radios with rotary dials, use the rotary dials to set the device's MultiHop Radio ID. The left dial sets the left digit and the right dial sets the right digit.

- Modbus IDs 01 through 10—Reserved for servers directly connected to the host (local I/O). Polling messages addressed to these devices are not relayed over the wireless link.
- Modbus IDs 11 through 60—Use for MultiHop client, repeater, and server radios. Up to 50 devices (local servers and remote servers) may be used in this system.

If your MultiHop radio does not have rotary dials, you must use the client radio to set the Modbus ID during the binding process.

© Banner Engineering Corp. All rights reserved.
www.bannerengineering.com

Bind a MultiHop Radio (with Rotary Dials)

To create your MultiHop network, bind the repeater and server radios to the designated client radio.

Before binding your radio, verify you have used the radio's rotary dials to assign a unique server ID to the radio.

1. Apply power to all MultiHop radios and place the MultiHop radios configured as servers or repeaters at least two meters away from the client radio.
2. Put the MultiHop client radio into binding mode.
    - For two-button client radios, triple-click button 2.
    - For one-button client radios, triple-click the button.

   For the two LED/button models, both LEDs flash red and the LCD shows *BINDNG and *client. For single LED/button models, the LED flashes alternatively red and green.
3. Put the MultiHop repeater or server radio into binding mode.
    - For two-button radios, triple-click button 2.
    - For one-button radios, triple-click the button.

   The child radio enters binding mode and searches for any client radio in binding mode. While searching for the client radio, the two red LEDs flash alternately. When the child radio finds the client radio and is bound, both red LEDs are solid for four seconds, then both red LEDs flash simultaneously four times. For M-GAGE Nodes, both colors of the single LED are solid (looks orange), then flash. After the server/repeater receives the binding code transmitted by the client, the server and repeater radios automatically exit binding mode.
4. Repeat step 3 for as many server or repeater radios as are needed for your network.
5. When all MultiHop radios are bound, exit binding mode on the client.
    - For two-button client radios, double-click button 2.
    - For one-button client radios, double-click the button.

   All radio devices begin to form the network after the client data radio exits binding mode.

Child Radios Synchronize to the Parent Radios

The synchronization process enables a Sure Cross® radio to join a wireless network formed by a client radio. After power-up, synchronization may take a few minutes to complete. First, all radios within range of the client data radio wirelessly synchronize to the client radio. These radios may be server radios or repeater radios.

After repeater radios are synchronized to the client radio, any radios that are not in sync with the client but can "hear" the repeater radio will synchronize to the repeater radios. Each repeater “family” that forms a wireless network path creates another layer of synchronization process. The table below details the process of synchronization with a parent. When testing the devices before installation, verify the radio devices are at least two meters apart or the communications may fail.

Server and Repeater LED Behavior

All bound radios set to server or repeater modes follow this LED behavior after powering up.

Client LED Behavior

All bound radios set to operate as clients follow this LED behavior after powering up.

		Two Button/LED Models		Single Button/LED Models
Process Steps	Response	LED 1	LED 2	LED
1	Power is supplied to the client radio	-	Solid amber	Solid amber
2	The client radio enters RUN mode.	Flashes green	-	Flashes green
	Serial data packets begin transmitting between the client and its children radios.	-	Flashes amber	Flashes amber

© Banner Engineering Corp. All rights reserved.
www.bannerengineering.com

MultiHop Configuration Software

Use Banner's MultiHop Configuration Software to view your MultiHop radio network and configure the radio and its I/O.

MultiHop Configuration Software Network and Device Overview screen

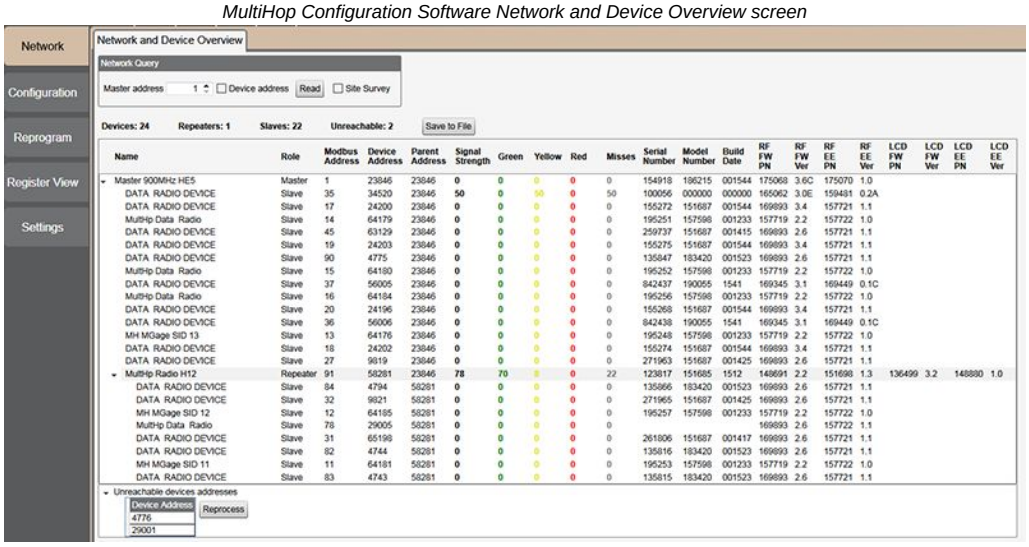

The software connects to a MultiHop client radio using one of four methods.

- Serial; using a USB to RS-485 (for RS-485 radios) or a USB to RS-232 (for RS-232 radios) converter cable.
- Modbus TCP; using an Ethernet connection to an Ethernet radio client.
- Serial DXM; using a USB cable to a DXM Controller to access a MultiHop client radio.
- TCP DXM: using an Ethernet connection to a DXM Controller to access a MultiHop client radio.

Banner recommends using **BWA-UCT-900**, an RS-485 to USB adapter cable with a wall plug that can power your radio while you configure it. The adapter cable is not required when connecting to a DXM Controller.

Download the most recent software revision from the Wireless Reference Library on Banner Engineering's website: www.bannerengineering.com.

MultiHop HB2 Modbus Register Table

Register (4xxxx)	Input #	Input Type	Units	I/O Range		Holding Register Representation		Pins
				Min.	Max.	Min. (Dec.)	Max. (Dec.)	
1	1							
2	2							
3	3	Discrete IN 3	-	0	1	0	1	Pin 3
4	4	Discrete IN 4	-	0	1	0	1	Pin 4
5	5	Analog IN 1	mA	0.0	20.0	0	65535	Pin 1
6	6	Analog IN 2	mA	0.0	20.0	0	65535	Pin 2

Register (4xxxx)	Output #	Output Type	Units	I/O Range		Holding Register Representation		Pins
				Min.	Max.	Min. (Dec.)	Max. (Dec.)	
501	1	Discrete OUT 1	-	0	1	0	1	Pin 6
502	2	Discrete OUT 2	-	0	1	0	1	Pin 7
503	3	Analog OUT 1	mA	0.0	20.0	0	65535	Pin 8
504	4	Analog OUT 2	mA	0.0	20.0	0	65535	Pin 9

Modbus Addressing Convention

All Modbus addresses refer to Modbus holding registers. When writing your own Modbus scripts, use the appropriate commands for interfacing to holding registers. Parameter description headings refer to addresses in the range of 40000 as is customary with Modbus convention.

© Banner Engineering Corp. All rights reserved.
www.bannerengineering.com

Modbus Register Configuration

Change the factory default settings for the inputs, outputs, and device operations using the device Modbus registers. To change parameters, set the data radio network to Modbus mode and assign the data radio a valid Modbus ID.

Generic input or output parameters are grouped together based on the device input or output number: input 1, input 2, output 1 etc. Operation type specific parameters (discrete, counter, analog 4 to 20 mA) are grouped together based on the I/O type number: analog 1, analog 2, counter 1, etc. Not all inputs or outputs may be available for all models. To determine which specific I/O is available on your model, refer to the Modbus Input/Output Register Maps listed in the device's datasheet. For more information about registers, refer to the MultiHop Product Instruction Manual (p/n 151317).

Factory Default Configuration

Discrete Inputs (PNP)

Enable	Sample	Boost Enable	Boost Warmup	Boost Voltage	Extended Input Read	NPN/PNP	Sample High	Sample Low
ON	40 ms	OFF	OFF	OFF	OFF	PNP	OFF	OFF

Default Analog Inputs

Enable	Sample	Boost Enable	Boost Warmup	Boost Voltage	Extended Input Read	Analog Max	Analog Min	Enable Fullscale
ON	1 sec	OFF	OFF	OFF	OFF	20000	0	ON

Default Discrete Outputs

Enable	Flash Enable
ON	OFF

Analog Outputs

Enable	Analog Max	Analog Min	Enable Fullscale	Hold Last State Enable	Default Output State
ON	20000	0	ON	OFF	0

Specifications

HB2 Board Module Specifications

Radio Range

A 2 dB antenna ships with this device.

Transmit power and range are subject to many factors, including antenna gain, installation methods, characteristics of the application, and environmental conditions.

Please refer to the following documents for installation instructions and high-gain antenna options.

Installing Your Sure Cross® Radios (151514)
Conducting a Site Survey (133602)
Sure Cross® Antenna Basics (132113)

Antenna Minimum Separation Distance

900 MHz radios transmitting at ≤ 250 mW: 2 m (6 ft) with the supplied antenna

900 MHz radios transmitting at ≥ 500 mW: 4.57 m (15 ft) with the supplied antenna

2.4 GHz radios transmitting at 65 mW: 0.3 m (1 ft) with the supplied antenna

Supply Voltage

10 V DC to 30 V DC Outside the USA: 12 V DC to 24 V DC, ± 10% [2]

Typical average consumption: 25 mA

Maximum consumption: Less than 100 mA at 24 V DC

[2] For European applications, power this device from a Limited Power Source as defined in EN 60950-1.

Radio Transmit Power

900 MHz Conducted: 27 dBm (500 mW); EIRP with the supplied antenna: < 36 dBm

2.4 GHz Conducted: < 18 dBm (65 mW); EIRP with the supplied antenna: < 20 dBm (100 mW)

Spread Spectrum Technology

FHSS (Frequency Hopping Spread Spectrum)

900 MHz Compliance (SX7023EXT Radio Module)

Radio module is indicated by the product label marking

Contains FCC ID: UE3SX7023EXT

Contains IC: 7044A-SX7023EXT

2.4 GHz Compliance (SX243 Radio Module)

Radio module is indicated by the product label marking

Contains FCC ID: UE3SX243

Radio Equipment Directive (RED) 2014/53/EU

Contains IC: 7044A-SX243

Interface

One red/green LED

One push button

Antenna Connection

U.FL-R-SMT.(01)

Use cable BWA-HW-030 (U.FL to RP-SMA) or the equivalent

© Banner Engineering Corp. All rights reserved.
www.bannerengineering.com

Discrete Inputs

Rating: 3 mA max current at 30 V DC

Sample Rate: 40 milliseconds

ON Condition: Greater than 8 V

OFF Condition: Less than 5 V

Discrete Output OFF Condition

Less than 2 V

Discrete Output Rating (PNP)

100 mA max current at 30 V DC

ON-State Saturation: Less than 3 V at 100 mA

OFF-state Leakage: Less than 10 µA

Discrete Output ON Condition

Supply minus 2 V

Analog Inputs

Rating: 24 mA

Impedance: Approximately 100 Ohms; To verify the analog input's impedance, use an Ohm meter to measure the resistance between the analog input terminal (AI*x*) and the ground (GND) terminal.

Sample Rate: 1 second

Accuracy: 0.1% of full scale +0.01% per °C

Resolution: 12-bit

Analog Outputs

Rating: 24 mA

Update Rate: 125 milliseconds

Accuracy: 0.1% of full scale +0.01% per °C

Resolution: 12-bit

Operating Environment

–40 °C to +85 °C (–40 °F to +185 °F)[3]

95% maximum relative humidity (non-condensing)

Radiated Immunity: 10 V/m (EN 61000-4-3)

[3] Operating the devices at the maximum operating conditions for extended periods can shorten the life of the device.

Certifications

CE/UKCA approval only applies to 2.4 GHz models

Banner Engineering BV
Park Lane, Culliganlaan 2F bus 3
1831 Diegem, BELGIUM

Turck Banner LTD Blenheim House
Blenheim Court
Wickford, Essex SS11 8YT
GREAT BRITAIN

FCC Part 15 Class A for Intentional Radiators

This equipment has been tested and found to comply with the limits for a Class A digital device, pursuant to Part 15 of the FCC Rules. These limits are designed to provide reasonable protection against harmful interference when the equipment is operated in a commercial environment. This equipment generates, uses, and can radiate radio frequency energy and, if not installed and used in accordance with the instruction manual, may cause harmful interference to radio communications. Operation of this equipment in a residential area is likely to cause harmful interference in which case the user will be required to correct the interference at his own expense.

(Part 15.21) Any changes or modifications not expressly approved by the party responsible for compliance could void the user's authority to operate this equipment.

Industry Canada Statement for Intentional Radiators

This device contains licence-exempt transmitters(s)/receiver(s) that comply with Innovation, Science and Economic Development Canada's licence-exempt RSS(s). Operation is subject to the following two conditions:

1. This device may not cause interference.
2. This device must accept any interference, including interference that may cause undesired operation of the device.

Cet appareil contient des émetteurs/récepteurs exemptés de licence conformes à la norme Innovation, Sciences, et Développement économique Canada. L'exploitation est autorisée aux deux conditions suivantes:

1. L'appareil ne doit pas produire de brouillage.
2. L'utilisateur de l'appareil doit accepter tout brouillage radioélectrique subi, même si le brouillage est susceptible d'en compromettre le fonctionnement.

MultiHop Board Communication Specifications

Communication Hardware (MultiHop Board Models, RS-485)

Interface: 2-wire half-duplex RS-485

Baud rates: 9.6k, 19.2k (default), or 38.4k via DIP switches; 1200, 2400, 57.6k, and 115.2k via the MultiHop Configuration Software

Data format: 8 data bits, no parity, 1 stop bit

Radio Packet Size (MultiHop)

900 MHz: 175 bytes (85 Modbus registers)

2.4 GHz: 75 bytes (37 Modbus registers)

Radio Intercharacter Timing (MultiHop)

3.5 milliseconds

© Banner Engineering Corp. All rights reserved.
www.bannerengineering.com

MultiHop M-HBx and Performance PBx Models Mounted on the Base

Most MultiHop M-HBx and Performance PBx models ship from the factory mounted on a plastic base.

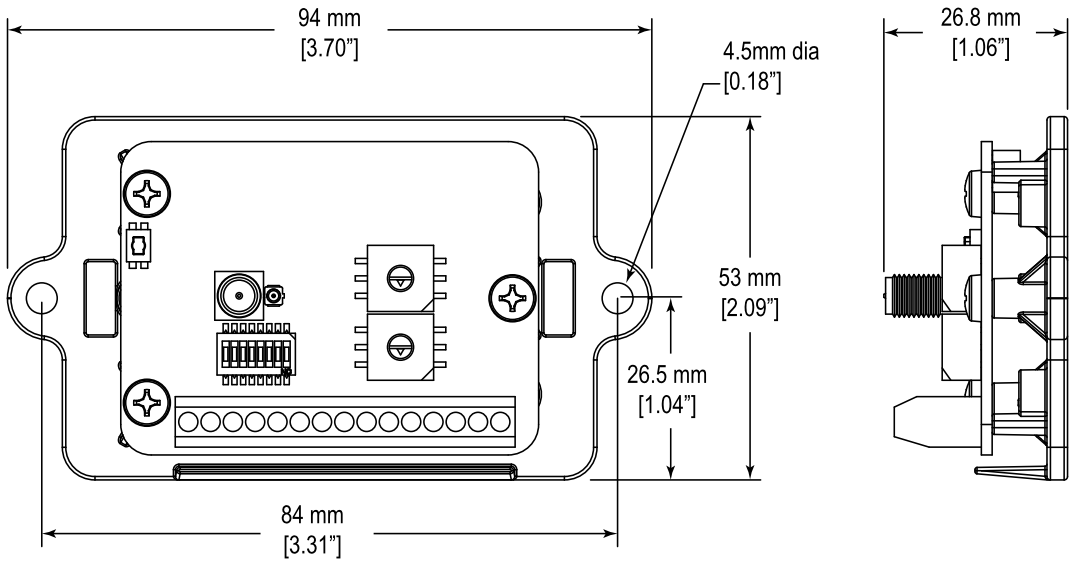

Accessories for the Board Models

BWA-HW-034

- DIN rail clip, black plastic



Warnings

WARNING:

- **Do not use this device for personnel protection**
- Using this device for personnel protection could result in serious injury or death.
- This device does not include the self-checking redundant circuitry necessary to allow its use in personnel safety applications. A device failure or malfunction can cause either an energized (on) or de-energized (off) output condition.

IMPORTANT: Please download the complete MultiHop HB2 Board Module technical documentation, available in multiple languages, from www.bannerengineering.com for details on the proper use, applications, Warnings, and installation instructions of this device.

IMPORTANT: Por favor descargue desde www.bannerengineering.com toda la documentación técnica de los MultiHop HB2 Board Module, disponibles en múltiples idiomas, para detalles del uso adecuado, aplicaciones, advertencias, y las instrucciones de instalación de estos dispositivos.

IMPORTANT: Veuillez télécharger la documentation technique complète des MultiHop HB2 Board Module sur notre site www.bannerengineering.com pour les détails sur leur utilisation correcte, les applications, les notes de sécurité et les instructions de montage.

Install and properly ground a qualified surge suppressor when installing a remote antenna system. Remote antenna configurations installed without surge suppressors invalidate the manufacturer's warranty. Keep the ground wire as short as possible and make all ground connections to a single-point ground system to ensure no ground loops are created. No surge suppressor can absorb all lightning strikes; do not touch the Sure Cross® device or any equipment connected to the Sure Cross® device during a thunderstorm.

Exporting Sure Cross® Radios. It is our intent to fully comply with all national and regional regulations regarding radio frequency emissions. **Customers who want to re-export this product to a country other than that to which it was sold must ensure the device is approved in the destination country.** The Sure Cross wireless products were certified for use in these countries using the antenna that ships with the product. When using other antennas, verify you are not exceeding the transmit power levels allowed by local governing agencies. This device has been designed to operate with the antennas listed on Banner Engineering’s website and having a maximum gain of 9 dBm. Antennas not included in this list or having a gain greater than 9 dBm are strictly prohibited for use with this device. The required antenna impedance is 50 ohms. To reduce potential radio interference to other users, the antenna type and its gain should be so chosen such that the equivalent isotropically radiated power (EIRP) is not more than that permitted for successful communication. Consult with Banner Engineering Corp. if the destination country is not on this list.

© Banner Engineering Corp. All rights reserved.
www.bannerengineering.com

IMPORTANT:

- **Never operate a radio without connecting an antenna**
- Operating radios without an antenna connected will damage the radio circuitry.
- To avoid damaging the radio circuitry, never apply power to a Sure Cross® Performance or Sure Cross® MultiHop radio without an antenna connected.

IMPORTANT:

- **Electrostatic discharge (ESD) sensitive device**
- ESD can damage the device. Damage from inappropriate handling is not covered by warranty.
- Use proper handling procedures to prevent ESD damage. Proper handling procedures include leaving devices in their anti-static packaging until ready for use; wearing anti-static wrist straps; and assembling units on a grounded, static-dissipative surface.

Banner Engineering Corp Limited Warranty

Banner Engineering Corp. warrants its products to be free from defects in material and workmanship for one year following the date of shipment. Banner Engineering Corp. will repair or replace, free of charge, any product of its manufacture which, at the time it is returned to the factory, is found to have been defective during the warranty period. This warranty does not cover damage or liability for misuse, abuse, or the improper application or installation of the Banner product.

THIS LIMITED WARRANTY IS EXCLUSIVE AND IN LIEU OF ALL OTHER WARRANTIES WHETHER EXPRESS OR IMPLIED (INCLUDING, WITHOUT LIMITATION, ANY WARRANTY OF MERCHANTABILITY OR FITNESS FOR A PARTICULAR PURPOSE), AND WHETHER ARISING UNDER COURSE OF PERFORMANCE, COURSE OF DEALING OR TRADE USAGE.

This Warranty is exclusive and limited to repair or, at the discretion of Banner Engineering Corp., replacement. **IN NO EVENT SHALL BANNER ENGINEERING CORP. BE LIABLE TO BUYER OR ANY OTHER PERSON OR ENTITY FOR ANY EXTRA COSTS, EXPENSES, LOSSES, LOSS OF PROFITS, OR ANY INCIDENTAL, CONSEQUENTIAL OR SPECIAL DAMAGES RESULTING FROM ANY PRODUCT DEFECT OR FROM THE USE OR INABILITY TO USE THE PRODUCT, WHETHER ARISING IN CONTRACT OR WARRANTY, STATUTE, TORT, STRICT LIABILITY, NEGLIGENCE, OR OTHERWISE.**

Banner Engineering Corp. reserves the right to change, modify or improve the design of the product without assuming any obligations or liabilities relating to any product previously manufactured by Banner Engineering Corp. Any misuse, abuse, or improper application or installation of this product or use of the product for personal protection applications when the product is identified as not intended for such purposes will void the product warranty. Any modifications to this product without prior express approval by Banner Engineering Corp will void the product warranties. All specifications published in this document are subject to change; Banner reserves the right to modify product specifications or update documentation at any time. Specifications and product information in English supersede that which is provided in any other language. For the most recent version of any documentation, refer to: www.bannerengineering.com.

For patent information, see www.bannerengineering.com/patents.

Notas Adicionales (con Antena)

Información México: La operación de este equipo está sujeta a las siguientes dos condiciones: 1) es posible que este equipo o dispositivo no cause interferencia perjudicial y 2) este equipo debe aceptar cualquier interferencia, incluyendo la que pueda causar su operación no deseada.

Banner es una marca registrada de Banner Engineering Corp. y podrán ser utilizadas de manera indistinta para referirse al fabricante. "Este equipo ha sido diseñado para operar con las antenas tipo Omnidireccional para una ganancia máxima de antena de 6 dBd y Yagi para una ganancia máxima de antena 10 dBd que en seguida se enlistan. También se incluyen aquellas con aprobación ATEX tipo Omnidireccional siempre que no excedan una ganancia máxima de antena de 6dBd. El uso con este equipo de antenas no incluidas en esta lista o que tengan una ganancia mayor que 6 dBd en tipo omnidireccional y 10 dBd en tipo Yagi, quedan prohibidas. La impedancia requerida de la antena es de 50 ohms."

Approved Antennas

BWA-9O2-C--Antena, Omni 902-928 MHz, 2 dBd, junta de caucho, RP-SMA Macho
BWA-9O5-C--Antena, Omni 902-928 MHz, 5 dBd, junta de caucho, RP-SMA Macho
BWA-9O6-A--Antena, Omni 902-928 MHz, 6 dBd, fibra de vidrio, 1800mm, N Hembra
BWA-9Y10-A--Antena, Yagi, 900 MHz, 10 dBd, N Hembra

Mexican Importer

Banner Engineering de Mèxico, S. de R.L. de C.V. | David Alfaro Siqueiros 103 Piso 2 Valle oriente | San Pedro Garza Garcia Nuevo Leòn, C. P. 66269

81 8363.2714

© Banner Engineering Corp. All rights reserved.
www.bannerengineering.com