iVu Machine-Mountable Remote Display

Datasheet

For use with iVu Remote Series Sensors

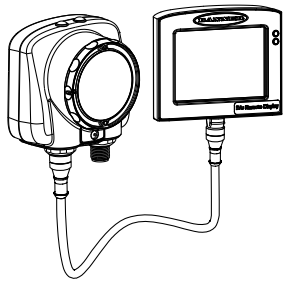

- 89 mm (3.5 in) diagonal color LCD flat-panel touch screen display
- Connects directly to an iVu Remote Series sensor
- Five cordset lengths available, ordered separately
- Provides remote viewing of the iVu sensor image and user interface
- Exceptionally wide viewing angle—60 degrees left and 60 degrees right; 50 degrees up, and 55 degrees down
- Two LEDs provide feedback on the remote sensor operation—one for Power/Error, and the other indicating inspection Pass/Fail
- Can be safely disconnected and reconnected to a live sensor
- Mounting bracket and stylus included with cordset kit (ordered separately)

Models

Model	**Description**
RDM35	89 mm (3.5 in) Diagonal Machine-Mountable Remote Touch Screen

Using the iVu Remote Display with iVu Sensors

The iVu Machine-Mountable Remote Display is used to setup iVu models that do not have integrated touch-screen displays. The new iVu Machine-Mountable Remote Display was designed to be used in applications where the Remote Display will always be connected to a sensor for constant monitoring or frequent programming, especially within electrically noisy environments.

The iVu Machine-Mountable Remote Display can be held in hand with a cable directly connecting the display to an iVu sensor

Note: The Machine-Mountable Remote Display cordset kit include the mounting bracket and stylus.

Specifications

Screen Size
3.5 in. diagonal

LCD Aspect **Ratio**
4:3

Display **Resolution**
320 × 240 RGB

Viewing Angle
60 degrees left, and 60 degrees right; 50 degrees up, and 55 degrees down

Housing Material
Zinc Zamac #3

Bracket Material
ABS

Stylus
Delrin

Display Weight
12 oz

Bracket with Stylus Weight
1.1 oz

Connection
8-pin M12 circular

Operating Temperature
0° to 50° C (32° to 122° F)

Environmental **Rating**
IP20

Certifications

Original Document
166096 Rev. B

31 July 2017

166096

ПРОМЭЛЕКТРОНИКА/ sales@prom-elec.com

Dimensions

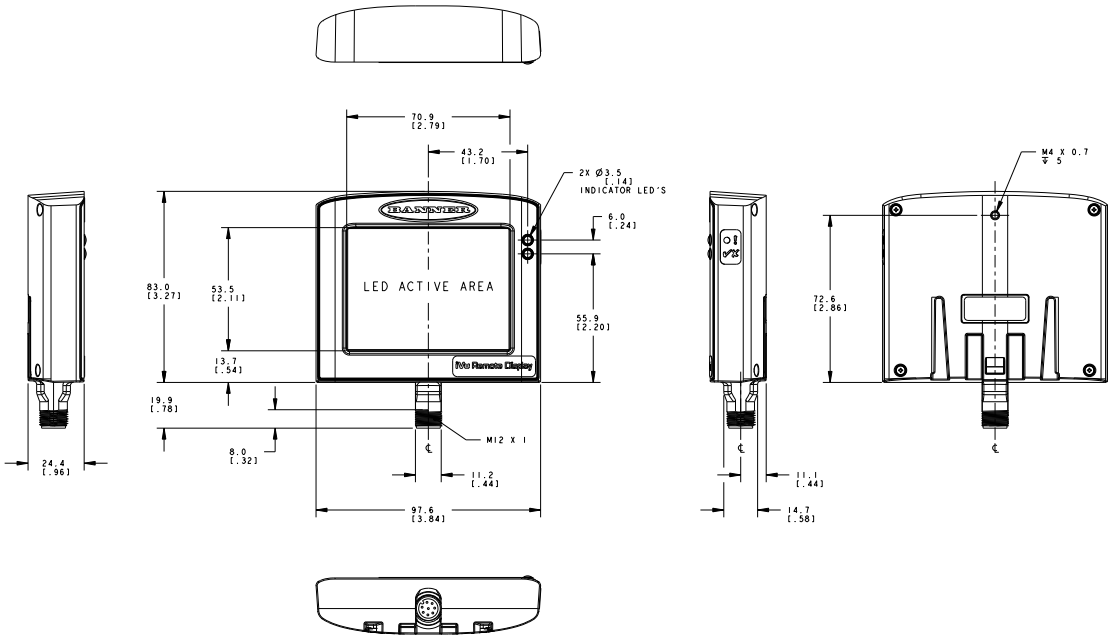

Accessories

Cordsets

Table 1: Cordsets

Model	Length	**Description**
IVURDM-QD-803	0.91 m (3 ft)	8-pin cable, straight, M12-M12
IVURDM-QD-806	1.83 m (6 ft)	
IVURDM-QD-815	4.57 m (15 ft)	
IVURDM-QD-830	9.14 m (30 ft)	
IVURDM-QD-850	15.2 m (50 ft)	
IVURDM-QD-803RA	0.91 m (3 ft)	8-pin cable, right-angle, M12-M12
IVURDM-QD-806RA	1.83 m (6 ft)	
IVURDM-QD-815RA	4.57 m (15 ft)	
IVURDM-QD-830RA	9.14 m (30 ft)	
IVURDM-QD-850RA	15.2 m (50 ft)	

Table 2: Cordset Kits

Model	Length	**Description**
IVURDM-QDK-803	0.91 m (3 ft)	8-pin cable, straight, M12-M12 Mounting bracket (SMBRDM35) Stylus
IVURDM-QDK-806	1.83 m (6 ft)	
IVURDM-QDK-815	4.57 m (15 ft)	
IVURDM-QDK-830	9.14 m (30 ft)	

Model	Length	**Description**
IVURDM-QDK-850	15.2 m (50 ft)	
IVURDM-QDK-803RA	0.91 m (3 ft)	8-pin cable, right-angle, M12-M12 Mounting bracket (SMBRDM35) Stylus
IVURDM-QDK-806RA	1.83 m (6 ft)	
IVURDM-QDK-815RA	4.57 m (15 ft)	
IVURDM-QDK-830RA	9.14 m (30 ft)	
IVURDM-QDK-850RA	15.2 m (50 ft)	

Brackets

SMBRDM35

- Used as a flush or panel mount
- Includes a stylus holder and mounting hardware

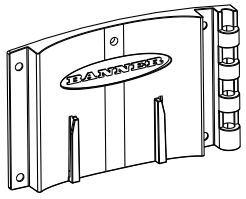

As an option, the SMBRD35 bracket can be used In non-vibrational environments with the SMBKS swivel and the SMBPPx accessories. See Banner Engineering Catalog or visit *www.bannerengineering.com* for more information.

Banner Engineering Corp. Limited Warranty

Banner Engineering Corp. warrants its products to be free from defects in material and workmanship for one year following the date of shipment. Banner Engineering Corp. will repair or replace, free of charge, any product of its manufacture which, at the time it is returned to the factory, is found to have been defective during the warranty period. This warranty does not cover damage or liability for misuse, abuse, or the improper application or installation of the Banner product.

THIS LIMITED WARRANTY IS EXCLUSIVE AND IN LIEU OF ALL OTHER WARRANTIES WHETHER EXPRESS OR IMPLIED (INCLUDING, WITHOUT LIMITATION, ANY WARRANTY OF MERCHANTABILITY OR FITNESS FOR A PARTICULAR PURPOSE), AND WHETHER ARISING UNDER COURSE OF PERFORMANCE, COURSE OF DEALING OR TRADE USAGE.

This Warranty is exclusive and limited to repair or, at the discretion of Banner Engineering Corp., replacement. IN NO EVENT SHALL BANNER ENGINEERING CORP. BE LIABLE TO BUYER OR ANY OTHER PERSON OR ENTITY FOR ANY EXTRA COSTS, EXPENSES, LOSSES, LOSS OF PROFITS, OR ANY INCIDENTAL, CONSEQUENTIAL OR SPECIAL DAMAGES RESULTING FROM ANY PRODUCT DEFECT OR FROM THE USE OR INABILITY TO USE THE PRODUCT, WHETHER ARISING IN CONTRACT OR WARRANTY, STATUTE, TORT, STRICT LIABILITY, NEGLIGENCE, OR OTHERWISE.

Banner Engineering Corp. reserves the right to change, modify or improve the design of the product without assuming any obligations or liabilities relating to any product previously manufactured by Banner Engineering Corp. Any misuse, abuse, or improper application or installation of this product or use of the product for personal protection applications when the product is identified as not intended for such purposes will void the product warranty. Any modifications to this product without prior express approval by Banner Engineering Corp will void the product warranties. All specifications published in this document are subject to change; Banner reserves the right to modify product specifications or update documentation at any time. Specifications and product information in English supersede that which is provided in any other language. For the most recent version of any documentation, refer to: *www.bannerengineering.com*.

© Banner Engineering Corp. All rights reserved