Features

50 mm Multicolor LED Indicator



- Bright, uniform indicator light
- Rugged IP66, IP67, IP69K per ISO 20653, and UL Type 4X and UL Type 13 design
- 24 V DC operation
- Operate up to three colors in one device
- PNP models available

Models

Model Name	LED Color C1	LED Color C2	LED Color C3	Input	Connector[1]
K50GRYPQ	Green	Red	Yellow	PNP	Integral 4-pin M12 male quick-disconnect connector
K50BRYPQ	Blue	Red	Yellow		
K50GRBPQ	Green	Red	Blue		

Wiring

4-pin M12 Male Pinout

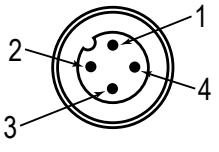

PNP Input

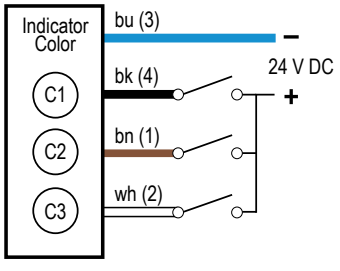

Color 3 overrides Colors 1 and 2. Color 2 overrides Color 1.

Specifications

Supply Voltage and Current
24 V DC (± 10%)
55 mA maximum current per color

Supply Protection Circuitry
Protected against reverse polarity and transient voltages

Leakage Current Immunity
400 µA

Input Response Time
Indicator On/Off: 1 ms maximum

Connections
Integral 4-pin M12 male quick-disconnect connector

Construction
Base and dome: Polycarbonate

Mounting
M30 × 1.5 threaded base, maximum torque 4.5 N·m (40 in-lbf)
Mounting nut included

Environmental Rating
IP66, IP67, IP69K per ISO 20653
UL Type 4X and UL Type 13

Vibration and Mechanical Shock
Meets IEC 60068-2-6 requirements (Vibration: 10 Hz to 55 Hz, 0.5 mm amplitude, 5 minutes sweep, 30 minutes dwell)
Meets IEC 60068-2-27 requirements (Shock: 30G 11 ms duration, half sine wave)

Operating Conditions
–40 °C to +50 °C (–40 °F to +122 °F)

[1] Models with a quick-disconnect connector require a mating cordset.

Original Instructions
25-Jul-25

© Banner Engineering Corp. All rights reserved.
www.bannerengineering.com

250281
p/n: 250281 Rev. A

ПРОМЭЛЕКТРОНИКА/ sales@prom-elec.com

Indicator Characteristics

Color	Dominant Wavelength (nm) or Color Temperature (CCT)	Lumen Output (Typical at 25 °C)[2]
Green	522 nm	21
Red	620 nm	11
Yellow	589 nm	26
Blue	466 nm	3.5

[2] Values shown at 25 °C - current and lumen values decrease 0.35% per 1 °C from ambient. For example, a unit will have a maximum current of 55 mA at -40 °C and 40 mA at +50 °C.

Required Overcurrent Protection

WARNING: Electrical connections must be made by qualified personnel in accordance with local and national electrical codes and regulations.

Overcurrent protection is required to be provided by end product application per the supplied table.

Overcurrent protection may be provided with external fusing or via Current Limiting, Class 2 Power Supply.

Supply wiring leads < 24 AWG shall not be spliced.

For additional product support, go to www.bannerengineering.com.

Supply Wiring (AWG)	Required Overcurrent Protection (A)	Supply Wiring (AWG)	Required Overcurrent Protection (A)
20	5.0	26	1.0
22	3.0	28	0.8
24	2.0	30	0.5

Certifications

Banner Engineering BV
Park Lane, Culliganlaan 2F bus 3
1831 Diegem, BELGIUM

Dimensions

All measurements are listed in millimeters [inches], unless noted otherwise. The measurements provided are subject to change.

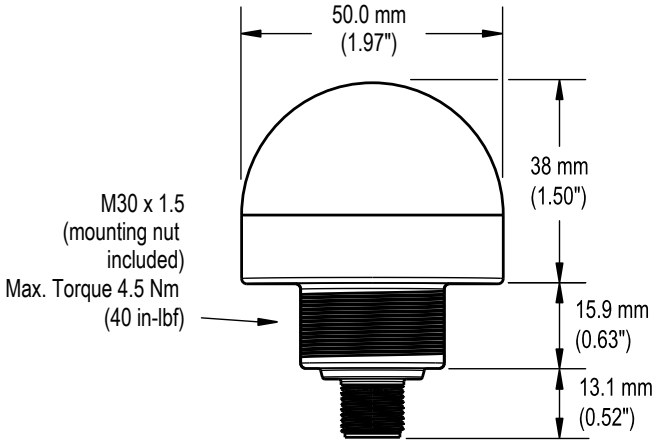

© Banner Engineering Corp. All rights reserved.
www.bannerengineering.com

Accessories

Cordsets

4-pin Single-Ended M12 Female Cordsets				
Model	**Length**	**Dimensions (mm)**	**Pinout (Female)**	
BC-M12F4-22-1	1 m (3.28 ft)	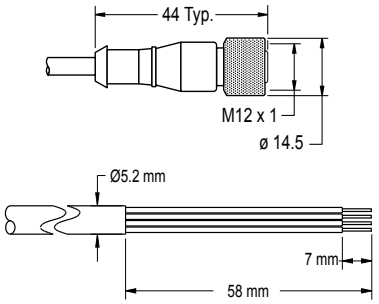	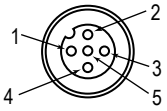	1 = Brown 2 = White 3 = Blue 4 = Black 5 = Unused
BC-M12F4-22-2	2 m (6.56 ft)			
BC-M12F4-22-5	5 m (16.4 ft)			
BC-M12F4-22-8	8 m (26.25 ft)			
BC-M12F4-22-10	10 m (30.81 ft)			
BC-M12F4-22-15	15 m (49.2 ft)			
BC-M12F4-22-20	20 m (65.61 ft)			
BC-M12F4-22-25	25 m (82.02 ft)			
BC-M12F4-22-30	30 m (98.42 ft)			

4-pin Single-Ended M12 Female Right-Angle Cordsets				
Model	**Length**	**Dimensions (mm)**	**Pinout (Female)**	
BC-M12F4A-22-1	1 m (3.28 ft)	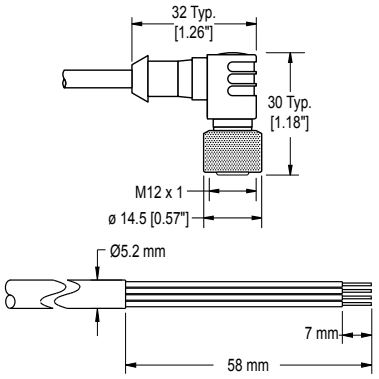	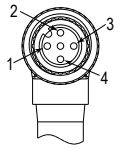	1 = Brown 2 = White 3 = Blue 4 = Black 5 = Unused
BC-M12F4A-22-2	2 m (6.56 ft)			
BC-M12F4A-22-5	5 m (16.4 ft)			
BC-M12F4A-22-8	8 m (26.25 ft)			
BC-M12F4A-22-10	10 m (30.81 ft)			
BC-M12F4A-22-15	15 m (49.2 ft)			

Brackets

SMB30A

- Right-angle bracket with curved slot for versatile orientation
- Clearance for M6 (¼ in) hardware
- Mounting hole for 30 mm sensor
- 12-gauge stainless steel

Hole center spacing: A to B=40
Hole size: A=ø 6.3, B= 27.1 × 6.3, C=ø 30.5

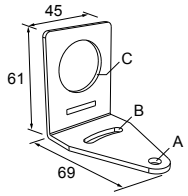

SMB30FA

- Swivel bracket with tilt and pan movement for precise adjustment
- Mounting hole for 30 mm sensor
- 12-gauge 304 stainless steel
- Easy sensor mounting to extrude rail T-slot
- Metric- and inch-size bolt available

Bolt thread: SMB30FA, A= 3/8 - 16 × 2 in; SMB30FAM10, A= M10 - 1.5 × 50
Hole size: B= ø 30.1

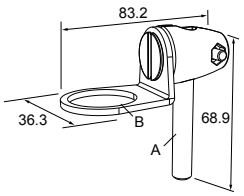

© Banner Engineering Corp. All rights reserved.
www.bannerengineering.com

SMB30FVK
- V-clamp, flat bracket and fasteners for mounting to pipe or extensions
- Clamp accommodates 28 mm dia. tubing or 1 in. square extrusions
- 30 mm hole for mounting sensors

Hole size: A= ø 31

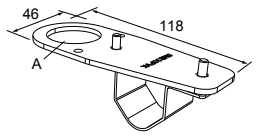

SMB30MM
- 12-gauge stainless steel bracket with curved mounting slots for versatile orientation
- Clearance for M6 (¼ in) hardware
- Mounting hole for 30 mm sensor

Hole center spacing: A = 51, A to B = 25.4
Hole size: A = 42.6 × 7, B = ø 6.4, C = ø 30.1

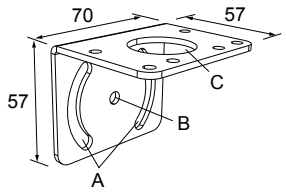

SMB30RAVK
- V-clamp, right-angle bracket and fasteners for mounting sensors to pipe or extrusion
- Clamp accommodates 28 mm dia. tubing or 1 in. square extrusions
- 30 mm hole for mounting sensors

Hole size: A = ø 30.5

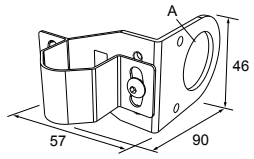

SMB30SC
- Swivel bracket with 30 mm mounting hole for sensor
- Black reinforced thermoplastic polyester
- Stainless steel mounting and swivel locking hardware included

Hole center spacing: A=ø 50.8
Hole size: A=ø 7.0, B=ø 30.0

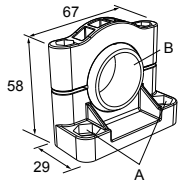

SMBAMS30P
- Flat SMBAMS series bracket
- 30 mm hole for mounting sensors
- Articulation slots for 90°+ rotation
- 12-gauge 300 series stainless steel

Hole center spacing: A=26.0, A to B=13.0
Hole size: A=26.8 × 7.0, B=ø 6.5, C=ø 31.0

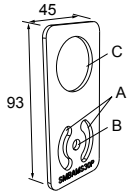

SMBAMS30RA
- Right-angle SMBAMS series bracket
- 30 mm hole for mounting sensors
- Articulation slots for 90°+ rotation
- 12-gauge (2.6 mm) cold-rolled steel

Hole center spacing: A=26.0, A to B=13.0
Hole size: A=26.8 × 7.0, B=ø 6.5, C=ø 31.0

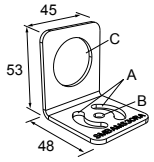

Wash-Down Cover

WC-K50 Washdown Cover
- FDA-grade silicone
- Fits K50 indicators
- IP67 and IP69K rated

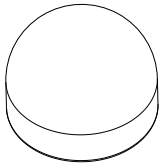

© Banner Engineering Corp. All rights reserved.
www.bannerengineering.com

Elevated Mount System

Model		Description	Components
SA-M30E12P - Black Acetal		• Streamlined black acetal stand-off pipe adapter/cover • Connects between 30 mm light base and ½ in. NPSM/DN15 pipe • Mounting hardware included	
Black Anodized Aluminum	**Clear Anodized Aluminum**	• Elevated-use stand-off pipe (½ in. NPSM/DN15) • Polished 304 stainless steel, black anodized aluminum, or clear anodized aluminum surface • ½ in. NPT thread at both ends: one end screws into the internal threads of the light's base, and one end screws into the mounting base adapter/cover • Compatible with most industrial environments	
SOP-E12-150A 150 mm (6 in) long	**SOP-E12-150AC** 150 mm (6 in) long		
SOP-E12-300A 300 mm (12 in) long	**SOP-E12-300AC** 300 mm (12 in) long		
SOP-E12-600A 600 mm (24 in) long	**SOP-E12-600AC** 600 mm (24 in) long		
SOP-E12-900A 900 mm (36 in) long	**SOP-E12-900AC** 900 mm (36 in) long		

Product Support and Maintenance

Clean with Mild Detergent and Warm Water

Wipe down the device with a soft cloth dampened with a mild detergent and warm water solution. Do not use any other chemicals for cleaning.

Repairs

Contact Banner Engineering for troubleshooting of this device. **Do not attempt any repairs to this Banner device; it contains no field-replaceable parts or components.** If the device, device part, or device component is determined to be defective by a Banner Applications Engineer, they will advise you of Banner's RMA (Return Merchandise Authorization) procedure.

> **IMPORTANT:** If instructed to return the device, pack it with care. Damage that occurs in return shipping is not covered by warranty.

Contact Us

Banner Engineering Corp. headquarters is located at: 9714 Tenth Avenue North | Plymouth, MN 55441, USA | Phone: + 1 888 373 6767

For worldwide locations and local representatives, visit www.bannerengineering.com.

Banner Engineering Corp Limited Warranty

Banner Engineering Corp. warrants its products to be free from defects in material and workmanship for one year following the date of shipment. Banner Engineering Corp. will repair or replace, free of charge, any product of its manufacture which, at the time it is returned to the factory, is found to have been defective during the warranty period. This warranty does not cover damage or liability for misuse, abuse, or the improper application or installation of the Banner product.

THIS LIMITED WARRANTY IS EXCLUSIVE AND IN LIEU OF ALL OTHER WARRANTIES WHETHER EXPRESS OR IMPLIED (INCLUDING, WITHOUT LIMITATION, ANY WARRANTY OF MERCHANTABILITY OR FITNESS FOR A PARTICULAR PURPOSE), AND WHETHER ARISING UNDER COURSE OF PERFORMANCE, COURSE OF DEALING OR TRADE USAGE.

This Warranty is exclusive and limited to repair or, at the discretion of Banner Engineering Corp., replacement. **IN NO EVENT SHALL BANNER ENGINEERING CORP. BE LIABLE TO BUYER OR ANY OTHER PERSON OR ENTITY FOR ANY EXTRA COSTS, EXPENSES, LOSSES, LOSS OF PROFITS, OR ANY INCIDENTAL, CONSEQUENTIAL OR SPECIAL DAMAGES RESULTING FROM ANY PRODUCT DEFECT OR FROM THE USE OR INABILITY TO USE THE PRODUCT, WHETHER ARISING IN CONTRACT OR WARRANTY, STATUTE, TORT, STRICT LIABILITY, NEGLIGENCE, OR OTHERWISE.**

Banner Engineering Corp. reserves the right to change, modify or improve the design of the product without assuming any obligations or liabilities relating to any product previously manufactured by Banner Engineering Corp. Any misuse, abuse, or improper application or installation of this product or use of the product for personal protection applications when the product is identified as not intended for such purposes will void the product warranty. Any modifications to this product without prior express approval by Banner Engineering Corp will void the product warranties. All specifications published in this document are subject to change; Banner reserves the right to modify product specifications or update documentation at any time. Specifications and product information in English supersede that which is provided in any other language. For the most recent version of any documentation, refer to: www.bannerengineering.com.

For patent information, see www.bannerengineering.com/patents.

© Banner Engineering Corp. All rights reserved.
www.bannerengineering.com