Features

The Sure Cross® wireless system is a radio frequency network with integrated I/O that operates in most environments to eliminate the need for wiring runs.

- Wireless industrial I/O device with four selectable discrete inputs, four sourcing discrete sourcing outputs, two universal analog inputs, and two 0 to 20 mA analog outputs
- Selectable transmit power levels of 250 mW or 500 mW for 900 MHz models and 65 mW for 2.4 GHz models
- 10 V DC to 30 V DC power input
- DIP switches for user configuration
- Modbus serial interface
- Site Survey analyzes the network's signal strength and reliability and displays the results on the Gateway's LCD
- Frequency Hopping Spread Spectrum (FHSS) technology ensures reliable data delivery
- Transceivers provide bidirectional communication between the Gateway and Node, including fully acknowledged data transmission
- Lost RF links are detected and relevant outputs set to user-defined conditions



Models

Models	Frequency	Environmental Rating	I/O
DX80G9M6S-P2	900 MHz ISM Band	IP67, NEMA 6	**Inputs**: Four selectable discrete, two 0 to 20 mA or 0 to 10 V analog **Outputs**: Four sourcing discrete, two 0 to 20 mA analog
DX80G9M6S-P2C		IP20, NEMA 1	
DX80G2M6S-P2	2.4 GHz ISM Band	IP67, NEMA 6	

The following models are no longer available for order but are still covered by the information in this document.

Models	Frequency	Environmental Rating	I/O
DX80G2M6S-P2C	2.4 GHz ISM Band	IP20, NEMA1	**Inputs**: Four selectable discrete, two 0 to 20 mA or 0 to 10 V analog **Outputs**: Four sourcing discrete, two 0 to 20 mA analog

DX80 Performance Configuration Software

The configuration software offers an easy way to link I/O points in your wireless network, view I/O register values, and set system communication parameters when a host system is not part of the wireless network. The software runs on any computer with the Windows Vista, Windows 7, Windows 8, or Windows 10 operating system.

Device Configuration screen

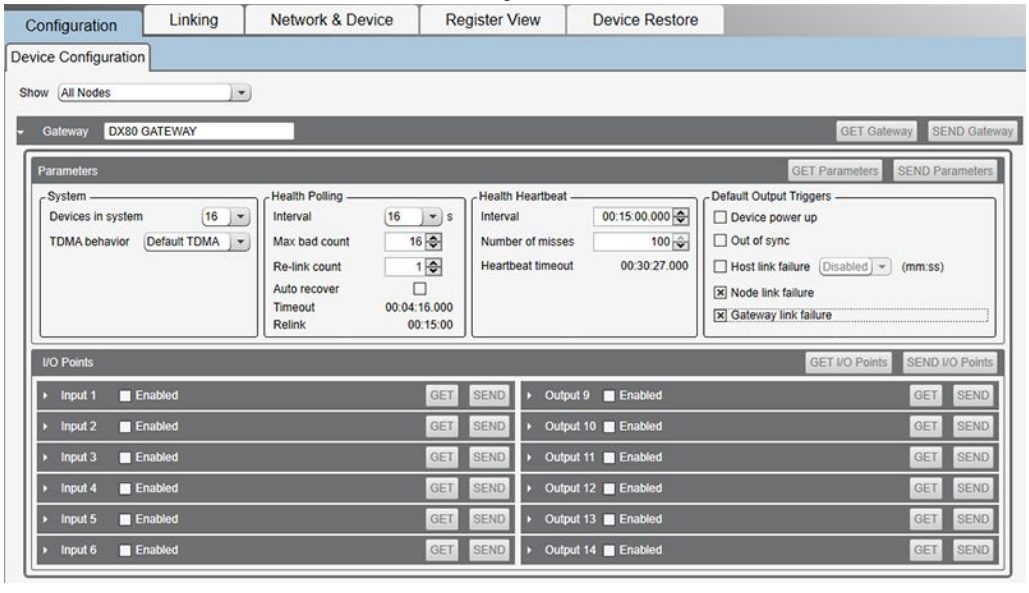

Original Instructions
06-Nov-25

© Banner Engineering Corp. All rights reserved.
www.bannerengineering.com

155861
p/n: 155861 Rev. M

ПРОМЭЛЕКТРОНИКА/ sales@prom-elec.com

Use a USB to RS-485 adapter cable to connect a standalone DX80 Gateway to the computer. For DXM Controllers with an internal DX80 radio, connect a computer to the DXM Controller using the supplied USB or Ethernet connection. Download the most recent revisions of the configuration software from Banner Engineering's website: https://www.bannerengineering.com/us/en/products/wireless-sensor-networks/reference-library/software.html.

The USB to RS-485 adapter cable is not required for the DXM Controller. For standalone DX80 Gateway devices use:

- USB to RS-485 adapter cable model **BWA-UCT-900** for 1 Watt radios
- USB to RS-485 adapter cable model **BWA-HW-006** for all other radios

Setting Up Your Wireless Network

To set up and install your wireless network, follow these steps.

For complete instructions, including binding, configuration, installation, weatherproofing, device menu maps, troubleshooting, and a list of accessories, refer to Sure Cross® Wireless I/O Network Instruction Manual (p/n 132607)

1. Disconnect the power from your Sure Cross® devices.
2. Configure the DIP switches of all devices. DIP switch configurations are always listed in the product's datasheet.
3. If your device has I/O, connect the sensors to the Sure Cross devices. Available I/O is always listed in the product's datasheet. If your device does not have I/O, skip this step.
4. Refer to the wiring diagrams to apply power to all devices.
    - For housed models, the Gateway's LED 1 is solid green and the Node's LED 2 flashes red to indicate there is no radio link to the Gateway.
    - For board-level models, the Gateway's LED is solid green and the Node's LED flashes red to indicate there is no radio link to the Gateway.
5. Form the wireless network by binding the Nodes to the Gateway.
6. Observe the LED behavior to verify the devices are communicating with each other.
    - For housed models, the Gateway's LED 1 is solid green and the Node's LED 1 flashes green to indicate it is communicating with the Gateway.
    - For board-level models, the Gateway's LED is solid green and the Node's LED flashes green to indicate it is communicating with the Gateway.
7. Configure any I/O points to use the sensors connected to the Sure Cross devices.
8. Conduct a site survey between the Gateway and Nodes.
9. Install your wireless sensor network components.

Configure the DIP Switches

Before changing DIP switch positions, disconnect the power.[1]

Any changes made to the DIP switches are not recognized until after power is cycled to the device. For parameters not set using the DIP switches, use the configuration software to make configuration changes. For parameters set using the DIP switches, the DIP switch positions override any changes made using the configuration software.

Access the Internal DIP Switches

Follow these steps to access the internal DIP switches.

1. Unscrew the four screws that mount the cover to the bottom housing.
2. Remove the cover from the housing without damaging the ribbon cable or the pins the cable plugs into.
3. Gently unplug the ribbon cable from the board mounted into the bottom housing. Skip this step if there is no ribbon cable (integrated battery models) or the ribbon cable is glued down (for C housing models).
4. Remove the black cover plate from the bottom of the device's cover.
   The DIP switches are located behind the rotary dials.
5. Make the necessary changes to the DIP switches.
6. Place the black cover plate back into position and gently push into place.
7. If necessary, plug the ribbon cable in after verifying that the blocked hole lines up with the missing pin.
8. Mount the cover back onto the housing.

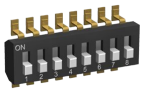

[1] For devices powered by batteries integrated into the housing, triple-click button 2, then double-click button 2 to reset the device without removing the battery.

© Banner Engineering Corp. All rights reserved.
www.bannerengineering.com

DIP Switch Settings

	Switches					
Device Settings	**1**	**2**	**3**	**4**	**5**	**6** [2]
900 MHz transmit power level: 500 mW (27 dBm)	OFF*					
900 MHz transmit power level: 250 mW (24 dBm), DX80 compatibility mode	ON					
Modbus or configuration software configured (overrides DIP switches 3-8)		OFF*				
DIP switch configured		ON				
Inputs sourcing (PNP)			OFF*			
Inputs sinking (NPN)			ON			
Link loss output: zero				OFF*	OFF*	
Link loss output: one				OFF	ON	
Link loss output: hold last state				ON	OFF	
Link loss output: user configuration				ON	ON	
0 to 20 mA scale						OFF*
4 to 20 mA scale						ON

* Default configuration

Analog Input and Output Scale

Use the DIP switch to select which current scale to use for all the device's analog inputs and outputs: 0-20 mA or 4-20 mA. When using a 4-20 mA sensor with a 0-20 mA input, the sensor uses the 4-20 mA section of the total range. Using a 4-20 mA with a 0-20 mA input allows you to determine when you have an error condition with the sensor. A normal input reading between 4 and 20 mA indicates a functioning sensor whereas a value below 4 mA indicates an error condition, such as a broken wire or loose connection. This DIP switch is used only on the 0-20 mA models, not the 0-10V models.

Discrete Input Type

Select the type of discrete input sensors to use with this device: sourcing (PNP) sensors or sinking (NPN) sensors.

Link Loss Outputs

The Sure Cross® wireless devices use a deterministic radio link time-out method to address RF link interruption or failure. When a radio link fails, all pertinent wired outputs are set to defined states until the link is recovered, ensuring that disruptions in the communications link result in predictable system behavior.

Following a radio link time-out, all outputs linked to the Node in question are set to de-energize (discrete outputs to zero, analog outputs to 0 mA or 4 mA), energize (discrete outputs to one, analog outputs to 20 mA), or hold the last stable state/value. Use the DIP switches to select the link loss output state.

Modbus/Software or DIP Switch Configured

In Modbus/Software Configured mode, use the DX80 Performance Configuration Software or a Modbus command to change the device parameters. DIP switch positions 3 through 8 are ignored. In DIP Switch Configured mode, use the DIP switches to configure the parameters listed in the table.

Transmit Power Levels

The 900 MHz radios have a high output option that will transmit at 500 mW (27 dBm). The low output option transmits at 250 mW (24 dBm). The 250 mW mode reduces the radio's range but improves the battery life in short-range applications. For 2.4 GHz models, this DIP switch is disabled. The transmit power for 2.4 GHz is fixed at about 65 mW EIRP (18 dBm).

[2] Not used when configured for 0-10 V I/O.

© Banner Engineering Corp. All rights reserved.
www.bannerengineering.com

Configure the Universal Analog IO by Cutting Resistors

For models without analog configuration jumpers, you must remove the installed resistors to configure inputs to use 0 to10 V instead of 0 to 20 mA. For example, to make analog input 1 a 0 to 10 V input, follow these instructions.

Note that a 220 ohm 0.1% resistor must be installed for a 0 to 20 mA input. Remove the resistor to configure the input as a 0 to 10 V input.

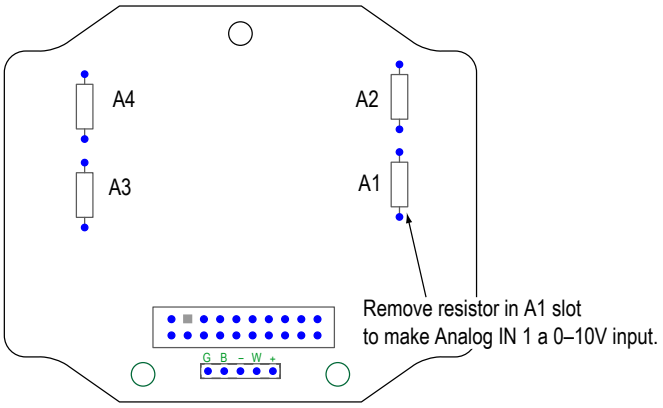

1. Cut out the resistor installed in the A1 (analog 1) slot.
   Your wiring board may differ slightly from the board shown. Use the board's labels to confirm you have selected the correct resistor to cut.
2. Launch the DX80 Performance Configuration Software.
3. After connecting to your network, go to the **Configuration › Device Configuration** screen.
4. Click on the arrow next to your device. For this example, we're using Node 1.
   The inputs and outputs for Node 1 display.
5. Click **GET Node** to download the existing configuration for your Node.
   The existing configuration for your Node is downloaded and loaded into the software.
6. For the input or output you are configuring, click on the arrow next to the I/O point. For this example, we're configuring Input 1.

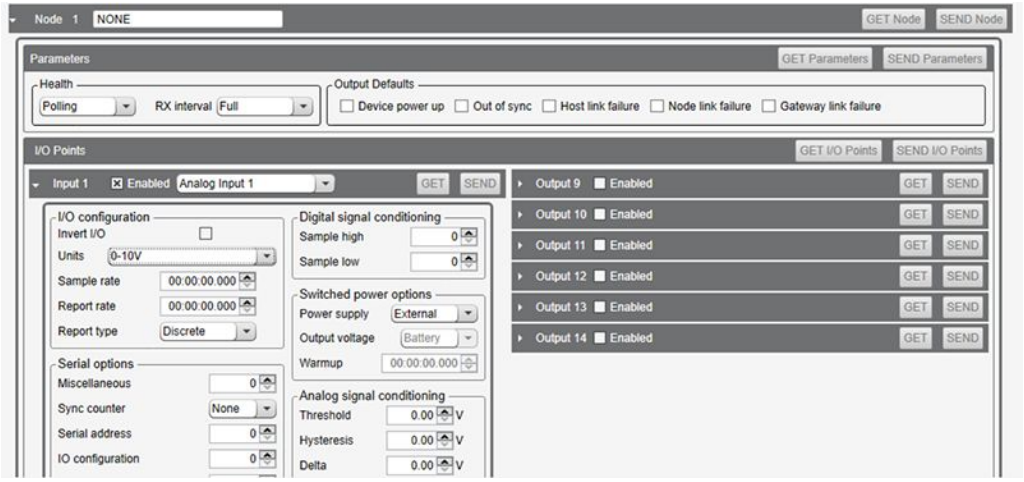

   The I/O point's parameters display.
7. Verify the I/O point is enabled, then from the Units drop-down list, select 0-10V.
8. Click **SEND Node** for the Node you configured.
   The configuration changes are uploaded back to your network.

Mixing Performance and Non-Performance (150 mW) Radios in the Same Network

To comply with federal regulations, the 150 mW radios and 500 mW radios communicate differently. All Performance models offer the ability to select between 250 mW and 500 mW operation using the DIP switches.

To mix Performance radios with non-Performance radios, refer to the product datasheet and:

- Operate Performance radios in 250 mW mode, not 500 mW mode
- Set non-Performance (150 mW) radios to use Extended Address Mode

The 150 mW, 250 mW, 500 mW, and 1 W networks operate when collocated, but verify the antenna separation distance between a Gateway and Node or between two Gateways is at least 10 feet apart. For more detailed instructions about setting up your wireless network, refer to the following documents:

- DX80 Performance Quick Start Guide (p/n 128185)
- DX80 Performance Wireless I/O Network Instruction Manual (p/n 132607)
- DXM Quick Start Guide (p/n 191247)
- DXM Instruction Manuals (DXM100-Bx: 190037 and DXM150-Bx: 190038)

Wire Your Sure Cross Device

Use the following wiring diagrams to first wire the sensors and then apply power to the Sure Cross® devices.

© Banner Engineering Corp. All rights reserved.
www.bannerengineering.com

5-pin A-Code M12 Male Wiring

Wiring the 5-pin M12 connector depends on the model and power requirements of the device. Connecting power to the communication pins will cause permanent damage.

5-pin M12 male connector wiring

5-pin M12 Male Connector	Pin	Wire Color	Description
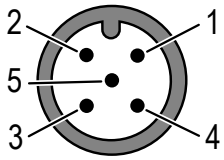	1	Brown (bn)	10 to 30 V DC
	2	White (wh)	RS485 / D1 / B / +
	3	Blue (bu)	DC common (GND)
	4	Black (bk)	RS485 / D0 / A / –
	5	Gray (gy)	Comms Ground

Wiring the Inputs and Outputs

IP67 Housing (P2 Models)

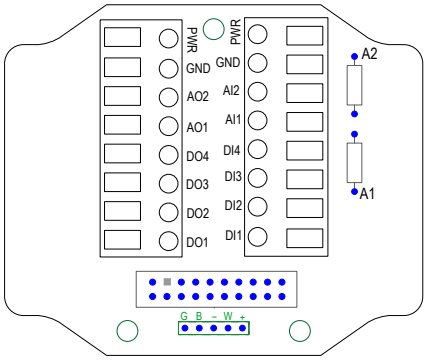

IP20 Housing (P2C Models)

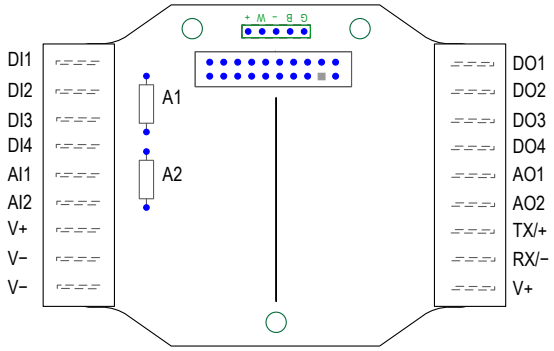

AI*x* or A*x*. Analog IN *x*
AO*x*. Analog OUT *x*
DI*x*. Discrete IN *x*
DO*x*. Discrete OUT *x*
GND. Ground/DC common connection
PWR. 10 V DC to 30 V DC power connection

RX/-. Serial communication line for the Gateway. No connection for Nodes
TX/+. Serial communication line for the Gateway; no connection for Nodes
V+. 10 V DC to 30 V DC power connection
V–. Ground/DC common connection

Connecting power to the communication pins will cause permanent damage. For the DX8*x*...C models, PWR in the wiring diagram refers to V+ on the wiring board and GND in the wiring diagram refers to V- on the wiring board. To power the sensor using the switch power output (SPx), replace the PWR with SPx in these wiring diagrams. Do not exceed analog input ratings for analog inputs. Only connect sensor outputs to analog inputs.

Discrete input wiring for PNP sensors

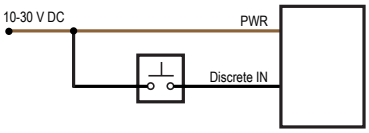

Discrete input wiring for NPN sensors

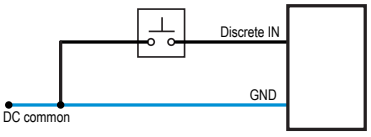

Discrete output wiring (PNP)

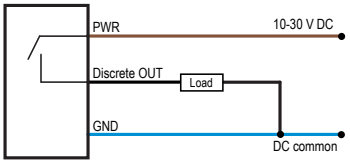

Analog input wiring (10-30 V DC power)

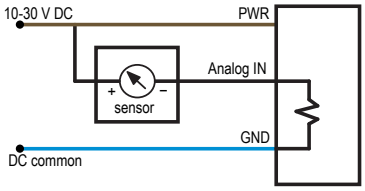

Analog input wiring (4-20 mA, 2-wire, externally-powered sensors)

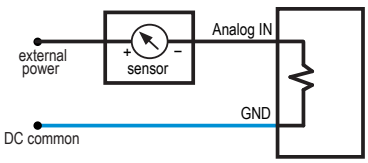

Analog output wiring

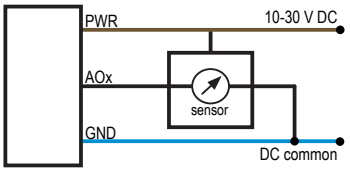

© Banner Engineering Corp. All rights reserved.
www.bannerengineering.com

Apply Power to the DX80C Nodes

Wiring power to the DX80...C models varies depending the power requirements of the model. Connecting DC power to the communication pins (Tx/Rx) causes permanent damage. For *Flex*Power devices, do not apply more than 5.5 V to the B+ terminal.

Wiring for the C housing models

Terminal Label	Gateway and DX85	10 V DC to 30 V DC Powered Nodes	Battery-Powered Nodes
V+	10 V DC to 30 V DC	10 V DC to 30 V DC	
Tx/+	RS485 / D1 / B / +		
V–	DC common (GND)	DC common (GND)	DC common (GND)
Rx/–	RS485 / D0 / A / -		
B+			3.6 V DC to 5.5 V DC

LED Behavior for the Gateways and Nodes

Verify all devices are communicating properly. Nodes do not sample inputs until they are communicating with the Gateway. The radios and antennas must be a minimum distance apart to function properly. Recommended minimum distances are:

900 MHz radios transmitting at ≤ 250 mW: 6 feet
900 MHz radios transmitting at ≥ 500 mW: 15 feet
2.4 GHz radios (transmitting at 65 mW): 1 foot

LED behavior

Devices with Two LEDs		Devices with One LED	Gateway Status	Node Status
LED 1	LED 2			
Green		Green	Power is on	N/A
Flashing green			N/A	Radio link is okay
Flashing red	Flashing red	Flashing red	Device error	Device error
	Flashing amber	Green and red flash (amber) together	Modbus communication active	N/A
	Flashing red	Flashing red	Modbus communication error	No radio link (flashes once every 3 s)
Flashing red (alternately)	Flashing red (alternately)	Green and red flash alternately	Device is in binding mode	Device is in binding mode
		Red	Gateway is trying to conduct a Site Survey with a Node that doesn't exist	
		Green and red solid (amber) together	No radio communication detected	
Red (for 4 seconds)	Red (for 4 seconds)	Green/red solid (amber) for 4 seconds, then flash 4 times		Binding mode is complete

For Gateway systems, the Modbus communication LEDs refer to the communication between the Gateway and its host system (if applicable).

Installing Your Sure Cross® Radios

Please refer to one of these instruction manuals to install your wireless network components.

- DX80 Performance Wireless I/O Network Instruction Manual: 132607
- MultiHop Data Radio Instruction Manual: 151317

P2 Holding Registers

Modbus Holding Register		EIP Registers		I/O Type	I/O Range		Holding Register Representation (Dec)	
Gateway	Node	Node			Min.	Max.	Min.	Max.
1	1 + (Node# × 16)	0 + (Node# × 8)	Instance 100 / N7	Discrete IN 1	0	1	0	1
2	2 + (Node# × 16)	1 + (Node# × 8)		Discrete IN 2	0	1	0	1
3	3 + (Node# × 16)	2 + (Node# × 8)		Discrete IN 3	0	1	0	1
4	4 + (Node# × 16)	3 + (Node# × 8)		Discrete IN 4	0	1	0	1
5	5 + (Node# × 16)	4 + (Node# × 8)		Analog IN 1 (mA/V)	0.0	20.0/10.0	0	65535

Continued on page 7

© Banner Engineering Corp. All rights reserved.
www.bannerengineering.com

Continued from page 6

Modbus Holding Register		EIP Registers		I/O Type	I/O Range		Holding Register Representation (Dec)	
Gateway	Node	Node			Min.	Max.	Min.	Max.
6	6 + (Node# × 16)	5 + (Node# × 8)		Analog IN 2 (mA/V)	0.0	20.0/10.0	0	65535
7	7 + (Node# × 16)	6 + (Node# × 8)		Reserved				
8	8 + (Node# × 16)	7 + (Node# × 8)		Device Message				
9	9 + (Node# × 16)	0 + (Node# × 8)	Instance 112 / N14	Discrete OUT 1	0	1	0	1
10	10 + (Node# × 16)	1 + (Node# × 8)		Discrete OUT 2	0	1	0	1
11	11 + (Node# × 16)	2 + (Node# × 8)		Discrete OUT 3	0	1	0	1
12	12 + (Node# × 16)	3 + (Node# × 8)		Discrete OUT 4	0	1	0	1
13	13 + (Node# × 16)	4 + (Node# × 8)		Analog OUT 1 (mA)	0.0	20.0	0	65535
14	14 + (Node# × 16)	5 + (Node# × 8)		Analog OUT 2 (mA)	0.0	20.0	0	65535
15	15 + (Node# × 16)	6 + (Node# × 8)		Control Message				
16	16 + (Node# × 16)	7 + (Node# × 8)		Reserved				

Specifications

Radio Specifications for Performance Models

Radio Transmit Power (900 MHz, 500 mW radios)

Conducted: 27 dBm (500 mW)

EIRP with the supplied antenna: < 36 dBm

Radio Transmit Power (2.4 GHz radios)

Conducted: < 18 dBm (65 mW)

EIRP with the supplied antenna: < 20 dBm (100 mW)

Radio Range

A 2 dB antenna ships with this device.

Transmit power and range are subject to many factors, including antenna gain, installation methods, characteristics of the application, and environmental conditions.

Please refer to the following documents for installation instructions and high-gain antenna options.

Installing Your Sure Cross® Radios (151514)
Conducting a Site Survey (133602)
Sure Cross® Antenna Basics (132113)

Antenna Minimum Separation Distance

900 MHz radios transmitting at ≥ 500 mW: 4.57 m (15 ft) with the supplied antenna

2.4 GHz radios transmitting at 65 mW: 0.3 m (1 ft) with the supplied antenna

Link Timeout (Performance)

Gateway: Configurable via User Configuration Software

Node: Defined by Gateway

Spread Spectrum Technology

FHSS (Frequency Hopping Spread Spectrum)

Antenna Connection

Ext. Reverse Polarity SMA, 50 Ohms

Max Tightening Torque: 0.45 N·m (4 lbf·in)

900 MHz Compliance (SX7023EXT Radio Module)

Radio module is indicated by the product label marking

Contains FCC ID: UE3SX7023EXT

Contains IC: 7044A-SX7023EXT

2.4 GHz Compliance (SX243 Radio Module)

Radio module is indicated by the product label marking

Contains FCC ID: UE3SX243

Radio Equipment Directive (RED) 2014/53/EU

Contains IC: 7044A-SX243

FCC Part 15 Class A for Intentional Radiators

This equipment has been tested and found to comply with the limits for a Class A digital device, pursuant to Part 15 of the FCC Rules. These limits are designed to provide reasonable protection against harmful interference when the equipment is operated in a commercial environment. This equipment generates, uses, and can radiate radio frequency energy and, if not installed and used in accordance with the instruction manual, may cause harmful interference to radio communications. Operation of this equipment in a residential area is likely to cause harmful interference in which case the user will be required to correct the interference at his own expense.

(Part 15.21) Any changes or modifications not expressly approved by the party responsible for compliance could void the user's authority to operate this equipment.

Industry Canada Statement for Intentional Radiators

This device contains licence-exempt transmitters(s)/receiver(s) that comply with Innovation, Science and Economic Development Canada's licence-exempt RSS(s). Operation is subject to the following two conditions:

1. This device may not cause interference.
2. This device must accept any interference, including interference that may cause undesired operation of the device.

Cet appareil contient des émetteurs/récepteurs exemptés de licence conformes à la norme Innovation, Sciences, et Développement économique Canada. L'exploitation est autorisée aux deux conditions suivantes:

1. L'appareil ne doit pas produire de brouillage.
2. L'utilisateur de l'appareil doit accepter tout brouillage radioélectrique subi, même si le brouillage est susceptible d'en compromettre le fonctionnement.

RS-485 Communication Specifications

Communication Hardware (RS-485)

Interface: 2-wire half-duplex RS-485

© Banner Engineering Corp. All rights reserved.
www.bannerengineering.com

Baud rates: 9.6k, 19.2k (default), or 38.4k

Data format: 8 data bits, no parity, 1 stop bit

Gateway P2 Specifications

Supply Voltage

10 V DC to 30 V DC (Outside the USA: 12 V DC to 24 V DC, ± 10%) [3]

Power Consumption

900 MHz Consumption: Maximum current draw is < 100 mA and typical current draw is < 50 mA at 24 V DC. (2.4 GHz consumption is less.)

Housing

Polycarbonate housing and rotary dial cover; polyester labels; EDPM rubber cover gasket; nitrile rubber, non-sulphur cured button covers

Weight: 0.26 kg (0.57 lbs)

Mounting: #10 or M5 (SS M5 hardware included)

Max. Tightening Torque: 0.56 N·m (5 lbf·in)

Interface

Two bi-color LED indicators, Two buttons, Six character LCD

Wiring Access

DX80 models: Four PG-7, one 1/2-inch NPT, one 5-pin M12 male quick-disconnect connector

DX80...C models: External terminals

Discrete Inputs

Four, DIP switch selectable between PNP and NPN

Input Rating: 3 mA max current at 30 V DC

Sample Rate: 62.5 milliseconds

Report Rate: On change of state

Discrete Input ON Condition

PNP: Greater than 8 V

NPN: Less than 0.7 V

Discrete Input OFF Condition

PNP: Less than 5 V

NPN: Greater than 2 V or open

Analog Inputs

Two, 0 to 20 mA (default) or 0 to 10 V (user configurable)

Input Rating (mA): 24 mA

Input Rating (V): 10 V

Impedance: Approximately 220 Ohms

Sample Rate: 62.5 milliseconds

Report Rate: 1 second or On Change of State (1% change in value)

Accuracy: 0.2% of full scale +0.01% per °C

Resolution: 12-bit

Discrete Outputs

Four PNP

Update Rate: 125 milliseconds

ON Condition: Supply minus 2 V

OFF Condition: Less than 2 V

Discrete Output Rating (PNP)

100 mA max current at 30 V DC

ON-State Saturation: Less than 3 V at 100 mA

OFF-state Leakage: Less than 10 µA

Analog Outputs

Two, 0 to 20 mA

Update Rate: 125 milliseconds

Accuracy: 0.1% of full scale +0.01% per °C

Resolution: 12-bit

Output State Following Timeout

De-energized (OFF)

Certifications

CE/UKCA approval only applies to 2.4 GHz models

Banner Engineering BV
Park Lane, Culliganlaan 2F bus 3
1831 Diegem, BELGIUM

Turck Banner LTD Blenheim House
Blenheim Court
Wickford, Essex SS11 8YT
GREAT BRITAIN

ANATEL
Agência Nacional de Telecomunicações
03737-22-04042

[3] For European applications, power this device from a Limited Power Source as defined in EN 60950-1.

ANATEL

Este equipamento não tem direito à proteção contra interferência prejudicial e não pode causar interferência em sistemas devidamente autorizados. Para maiores informações, consulte o site da ANATEL www.gov.br/anatel/pt-br/

ANATEL
Agência Nacional de Telecomunicações

Environmental Specifications (IP67 Housing Models)

Operating Conditions

–40 °C to +85 °C (–40 °F to +185 °F) (Electronics); –20 °C to +80 °C (–4 °F to +176 °F) (LCD)

95% maximum relative humidity (non-condensing)

Radiated Immunity: 10 V/m (EN 61000-4-3)

Shock and Vibration

All models meet IEC 60068-2-6 and IEC 60068-2-27 testing criteria

Shock: 30G 11 ms duration, half sine wave per IEC 60068-2-27

Vibration: 10 Hz to 55 Hz, 0.5 mm peak-to-peak amplitude per IEC 60068-2-6

© Banner Engineering Corp. All rights reserved.
www.bannerengineering.com

Environmental Ratings

IEC IP67; NEMA 6

For installation and waterproofing instructions, go to www.bannerengineering.com and search for the complete instruction manual (p/n 132607)

Operating the devices at the maximum operating conditions for extended periods can shorten the life of the device.

Environmental Specifications for the C Housings

Operating Conditions

–40 °C to +85 °C (–40 °F to +185 °F) (Electronics); –20 °C to +80 °C (–4 °F to +176 °F) (LCD)

95% maximum relative humidity (non-condensing)

Radiated Immunity: 10 V/m (EN 61000-4-3)

Shock and Vibration

All models meet IEC 60068-2-6 and IEC 60068-2-27 testing criteria

Shock: 30G 11 ms duration, half sine wave per IEC 60068-2-27

Vibration: 10 Hz to 55 Hz, 0.5 mm peak-to-peak amplitude per IEC 60068-2-6

Environmental Ratings

"C" Housing Models/External wiring terminals: IEC IP20; NEMA 1

Refer to the Sure Cross® DX80 Performance (p/n 132607) or the Sure Cross® MultiHop (p/n 151317) instruction manual for installation and waterproofing instructions.

Operating the devices at the maximum operating conditions for extended periods can shorten the life of the device.

Included with the DX80 and DX80...C Models

- **BWA-HW-002**: DX80 Access Hardware Kit, containing four PG-7 plastic threaded plugs, four PG-7 nylon gland fittings, four PG-7 hex nuts, one 1/2-inch NPT plug, and one 1/2-inch nylon gland fitting. (Not included with IP20 DX80...C models)
- **BWA-HW-001**: Mounting Hardware Kit, containing four M5-0.8 × 25mm SS screws, four M5-0.8 × 16 mm SS screws, four M5-0.8 mm SS hex nuts, and four #8-32 × 3/4" SS bolts
- **BWA-HW-003**: PTFE tape
- **BWA-9O2-C** (900 MHz) or **BWA-2O2-C** (2.4 GHz): Antenna, 2 dBd Omni, Rubber Swivel RP-SMA Male (not included with internal antenna models)
- **BC-M12F5-22-2** (p/n 235936): 5-pin A-Code 2 m cordset with an M12 female (straight) connector on one end and flying leads on the other end (not included with FlexPower devices)
- **BWA-HW-011**: IP20 Screw Terminal Headers (2 pack) (included only with the IP20 DX80...C models)
- Product datasheet and product family Quick Start Guide (128185 for Performance models or 152653 for MultiHop models)

Warnings

WARNING:
- **Do not use this device for personnel protection**
- Using this device for personnel protection could result in serious injury or death.
- This device does not include the self-checking redundant circuitry necessary to allow its use in personnel safety applications. A device failure or malfunction can cause either an energized (on) or de-energized (off) output condition.

IMPORTANT: Please download the complete Performance P2 Gateway technical documentation, available in multiple languages, from www.bannerengineering.com for details on the proper use, applications, Warnings, and installation instructions of this device.

IMPORTANT: Por favor descargue desde www.bannerengineering.com toda la documentación técnica de los Performance P2 Gateway, disponibles en múltiples idiomas, para detalles del uso adecuado, aplicaciones, advertencias, y las instrucciones de instalación de estos dispositivos.

IMPORTANT: Veuillez télécharger la documentation technique complète des Performance P2 Gateway sur notre site www.bannerengineering.com pour les détails sur leur utilisation correcte, les applications, les notes de sécurité et les instructions de montage.

Install and properly ground a qualified surge suppressor when installing a remote antenna system. Remote antenna configurations installed without surge suppressors invalidate the manufacturer's warranty. Keep the ground wire as short as possible and make all ground connections to a single-point ground system to ensure no ground loops are created. No surge suppressor can absorb all lightning strikes; do not touch the Sure Cross® device or any equipment connected to the Sure Cross® device during a thunderstorm.

Exporting Sure Cross® Radios. It is our intent to fully comply with all national and regional regulations regarding radio frequency emissions. **Customers who want to re-export this product to a country other than that to which it was sold must ensure the device is approved in the destination country.** The Sure Cross wireless products were certified for use in these countries using the antenna that ships with the product. When using other antennas, verify you are not exceeding the transmit power levels allowed by local governing agencies. This device has been designed to operate with the antennas listed on Banner Engineering's website and having a maximum gain of 9 dBm. Antennas not included in this list or having a gain greater than 9 dBm are strictly prohibited for use with this device. The required antenna impedance is 50 ohms. To reduce potential radio interference to other users, the antenna type and its gain should be so chosen such that the equivalent isotropically radiated power (EIRP) is not more than that permitted for successful communication. Consult with Banner Engineering Corp. if the destination country is not on this list.

© Banner Engineering Corp. All rights reserved.
www.bannerengineering.com

IMPORTANT:

- **Never operate a radio without connecting an antenna**
- Operating radios without an antenna connected will damage the radio circuitry.
- To avoid damaging the radio circuitry, never apply power to a Sure Cross® Performance or Sure Cross® MultiHop radio without an antenna connected.

IMPORTANT:

- **Electrostatic discharge (ESD) sensitive device**
- ESD can damage the device. Damage from inappropriate handling is not covered by warranty.
- Use proper handling procedures to prevent ESD damage. Proper handling procedures include leaving devices in their anti-static packaging until ready for use; wearing anti-static wrist straps; and assembling units on a grounded, static-dissipative surface.

Banner Engineering Corp Limited Warranty

Banner Engineering Corp. warrants its products to be free from defects in material and workmanship for one year following the date of shipment. Banner Engineering Corp. will repair or replace, free of charge, any product of its manufacture which, at the time it is returned to the factory, is found to have been defective during the warranty period. This warranty does not cover damage or liability for misuse, abuse, or the improper application or installation of the Banner product.

THIS LIMITED WARRANTY IS EXCLUSIVE AND IN LIEU OF ALL OTHER WARRANTIES WHETHER EXPRESS OR IMPLIED (INCLUDING, WITHOUT LIMITATION, ANY WARRANTY OF MERCHANTABILITY OR FITNESS FOR A PARTICULAR PURPOSE), AND WHETHER ARISING UNDER COURSE OF PERFORMANCE, COURSE OF DEALING OR TRADE USAGE.

This Warranty is exclusive and limited to repair or, at the discretion of Banner Engineering Corp., replacement. **IN NO EVENT SHALL BANNER ENGINEERING CORP. BE LIABLE TO BUYER OR ANY OTHER PERSON OR ENTITY FOR ANY EXTRA COSTS, EXPENSES, LOSSES, LOSS OF PROFITS, OR ANY INCIDENTAL, CONSEQUENTIAL OR SPECIAL DAMAGES RESULTING FROM ANY PRODUCT DEFECT OR FROM THE USE OR INABILITY TO USE THE PRODUCT, WHETHER ARISING IN CONTRACT OR WARRANTY, STATUTE, TORT, STRICT LIABILITY, NEGLIGENCE, OR OTHERWISE.**

Banner Engineering Corp. reserves the right to change, modify or improve the design of the product without assuming any obligations or liabilities relating to any product previously manufactured by Banner Engineering Corp. Any misuse, abuse, or improper application or installation of this product or use of the product for personal protection applications when the product is identified as not intended for such purposes will void the product warranty. Any modifications to this product without prior express approval by Banner Engineering Corp will void the product warranties. All specifications published in this document are subject to change; Banner reserves the right to modify product specifications or update documentation at any time. Specifications and product information in English supersede that which is provided in any other language. For the most recent version of any documentation, refer to: www.bannerengineering.com.

For patent information, see www.bannerengineering.com/patents.

Notas Adicionales (con Antena)

Información México: La operación de este equipo está sujeta a las siguientes dos condiciones: 1) es posible que este equipo o dispositivo no cause interferencia perjudicial y 2) este equipo debe aceptar cualquier interferencia, incluyendo la que pueda causar su operación no deseada.

Banner es una marca registrada de Banner Engineering Corp. y podrán ser utilizadas de manera indistinta para referirse al fabricante. "Este equipo ha sido diseñado para operar con las antenas tipo Omnidireccional para una ganancia máxima de antena de 6 dBd y Yagi para una ganancia máxima de antena 10 dBd que en seguida se enlistan. También se incluyen aquellas con aprobación ATEX tipo Omnidireccional siempre que no excedan una ganancia máxima de antena de 6dBd. El uso con este equipo de antenas no incluidas en esta lista o que tengan una ganancia mayor que 6 dBd en tipo omnidireccional y 10 dBd en tipo Yagi, quedan prohibidas. La impedancia requerida de la antena es de 50 ohms."

Approved Antennas

BWA-9O2-C--Antena, Omni 902-928 MHz, 2 dBd, junta de caucho, RP-SMA Macho
BWA-9O5-C--Antena, Omni 902-928 MHz, 5 dBd, junta de caucho, RP-SMA Macho
BWA-9O6-A--Antena, Omni 902-928 MHz, 6 dBd, fibra de vidrio, 1800mm, N Hembra
BWA-9Y10-A--Antena, Yagi, 900 MHz, 10 dBd, N Hembra

Mexican Importer

Banner Engineering de Mèxico, S. de R.L. de C.V. | David Alfaro Siqueiros 103 Piso 2 Valle oriente | San Pedro Garza Garcia Nuevo Leòn, C. P. 66269

81 8363.2714

© Banner Engineering Corp. All rights reserved.
www.bannerengineering.com