MODEL NO.	"L"	"TL"	P/N
PBE415UTMNLMT177	5000 [197]	4500 [177]	803264
PBE430UTMNLMT180	10000 [394]	4572 [180]	82162
PBE430UTMNLMT387	10000 [394]	9830 [387]	79814
PBE415UTMNL	5000 [197]	1829 [72]	70370
PBE46UTMNLMT9	2000 [79]	229 [9]	56116
PBE46UTMNL	2000 [79]	1829 [72]	48055

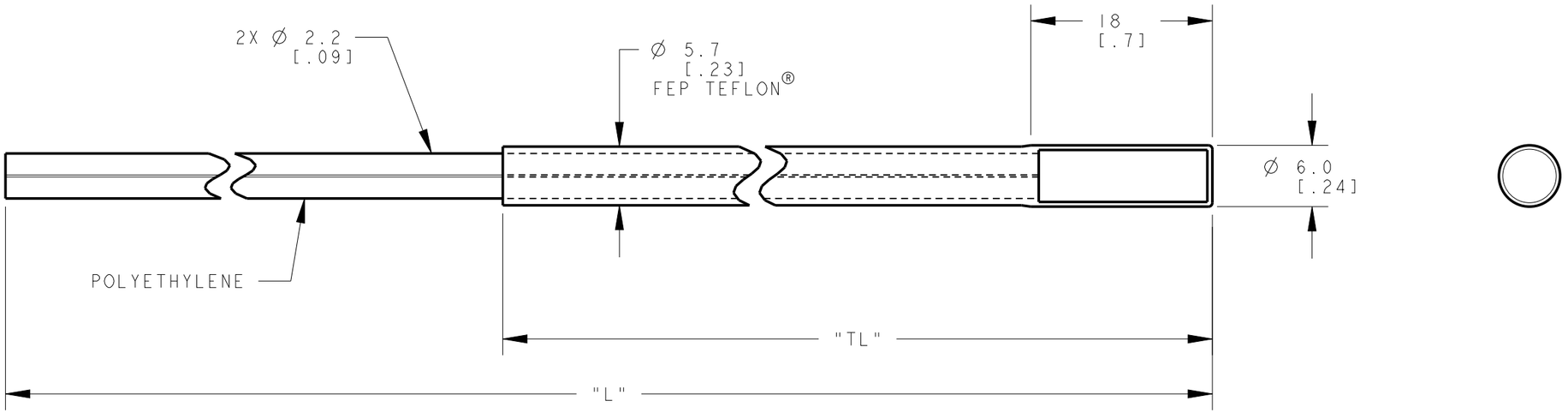

NOTES:
1. ALL DIMENSIONS ARE MILLIMETERS [INCHES] UNLESS OTHERWISE NOTED.
2. REFER TO "www.bannerengineering.com" FOR ADDITIONAL DATA AND SPECIFICATIONS.

This drawing is the property of BANNER ENGINEERING CORP. Any use or reproduction, in any form, without prior written permission of Banner is prohibited.
© 2015 Banner Engineering Corp.

THIRD ANGLE PROJECTION

BANNER ENGINEERING CORP.
www.bannerengineering.com

TITLE

PBE4 SERIES TEFLON ENCAPSULATED UNTERMINATED

SIZE	DRAWING NO.	REV.
B	166404	A
SCALE 2:1	SHEET 1 OF 1	

CREO

ПРОМЭЛЕКТРОНИКА/ sales@prom-elec.com