K100 Pro Hazardous Daylight Visible Beacon - AC Datasheet

Features

High Daylight Visibility, Programmable Multicolor Indicator with Optional Audible Alarm for Indoor or Outdoor Use

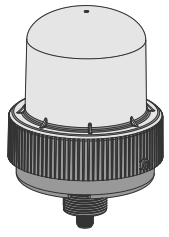

- Highly visible indicator provides bright, even light in direct sunlight
- Ex/HazLoc approvals for potentially explosive environment applications. ATEX/IECEx and U.S./Canadian Zone approvals on non-audible models only
- Three colors in one device
- Programmable using Banner's Pro Editor software and Pro Converter Cable
- 36 mm threaded polycarbonate base
- Rugged IP69K per ISO 20653, UL Type 4X housing
- PNP or NPN operation depending on wiring
- Rugged UV-stabilized polycarbonate base and dome
- 12 V DC to 48 V DC operating voltage
- 100 V AC to 240 V AC operating voltage
- IK10 Impact rating for maximum protection in demanding applications

Models

Family	Style	Type	Classification	Voltage	Color 1	Color 2	Color 3	Audible	Connector[1]
K100	P = Pro	BL = Beacon	N = Hazardous Area	Z = AC	G = Green	G = Green	G = Green	Blank = Non-audible	Blank = 2 m (6.5 ft) integral cable[2]
					Y = Yellow	Y = Yellow	Y = Yellow	A = Audible	Q = Integral 5-pin M12 male quick-disconnect (QD) connector[3]
					R = Red	R = Red	R = Red		
					B = Blue	B = Blue	B = Blue		
					W = White	W = White	W = White		

Audible and non-audible K100 Pro Beacon models are approved for (both 2 m integral cable and QD models):

- Class I Div. 2, Groups ABCD
- Class II Div. 2, Groups FG
- Class III Div. 1 & Div. 2

Additionally, non-audible K100 Pro Beacon models with 2 m integral cable are ATEX/IECEx and U.S./Canadian Zone[2] approved for:

- II 3 G Ex ec IIC T4 Gc
- II 3 D Ex tc IIIC T85°C Dc
- Class I Zone 2, AEx ec IIC T4 Gc
- Class I Zone 2, Ex ec IIC T4 Gc
- Zone 22, AEx tc IIIB T85°C Dc
- Zone 22, Ex tc IIIB T85°C Dc

Installation Instructions

Ex/HazLoc Applications

WARNING:

- **Explosive Atmospheres/Hazardous Locations**
- It is the user's responsibility to ensure that all local, state, and national laws, rules, codes, or regulations relating to the installation and use of this device in any particular application are satisfied. This device must be installed by a Qualified Person[4], in accordance with this document and applicable regulations.

(1) Models with a quick-disconnect connector require a mating cordset.
(2) For American/Canadian Zone Certification, must be enclosed with a protected conduit or suitable enclosure as detailed in the specific conditions of use.
(3) Must be enclosed with a protected conduit or a suitable enclosure.
(4) A Qualified Person is a person who, by possession of a recognized degree or certificate of professional training, or who, by extensive knowledge, training and experience, has successfully demonstrated the ability to solve problems relating to the subject matter and work.

Original Instructions
18-Feb-25

© Banner Engineering Corp. All rights reserved.
www.bannerengineering.com

225025
p/n: 225025 Rev. D

ПРОМЭЛЕКТРОНИКА/ sales@prom-elec.com

WARNING:
- **Explosion Hazard**
- Do not disconnect equipment unless the power has been switched off or the area is known to be non-hazardous.

WARNING:
- **Electrostatic Discharge (ESD) Specific Conditions for Safe Use**
- Parts of the enclosure are non-conducting and can generate an ignition-capable level of ESD.
- To reduce the risk of ignition due to electrostatic discharge, avoid contact with the equipment while an explosive atmosphere is present.
- Clean the equipment with only a damp cloth.

Specific Conditions for Use and General Notes

- See Specifications and Wiring Diagrams for important information concerning entity parameters, permissible locations, electrical connections and certifications.
- In addition to the warning above concerning user responsibility, the installation must comply with the following:
  - All installations must comply with all manufacturer's instructions.
  - All applicable wiring methods in accordance with the relevant local regulations and the authority having jurisdiction.
  - U.S. Installations: The relevant requirements of the National Electric Code® (ANSI/NFPA-70 NEC®).
  - Canadian Installations: The relevant requirements of the Canadian Electrical Code (CSA C22.1).
  - ATEX / IECEx Installations: The relevant requirements of EN IEC 60079-14 and applicable National regulations.
- Do not attempt any repairs to this device; it contains no field-replaceable parts or components. Tampering and/or replacement with non-factory components may adversely affect the safe use of the system.
- The nonconducting materials of this device may be susceptible to ignition-capable level of electrostatic charging and precautions must be taken to avoid this. The user/installer shall ensure that the equipment is not installed in a location where it may be subjected to external conditions (such as high-pressure steam) which are conducive to creating a build-up of electrostatic charges.
- Clean with a damp cloth only.
- If the equipment is likely to come into contact with aggressive substances[5], then it is the responsibility of the user to take suitable precautions[6] that prevent it from being adversely affected, thus ensuring that the type of protection is not compromised.
- The ingress protection (IP rating) of enclosures/panels may be invalidated by the installation of the beacon. The installation of the beacon in a particular enclosure/panel is subject to the evaluation/acceptance of the authority having jurisdiction.
- Models with integral quick-disconnect (QD) connectors:
  Use recommended Banner cordsets (see "Cordsets" on page 7), or suitable quick-disconnect cordsets with threaded retaining nut (see"Specifications" on page 4). The cordset must be securely fastened using the quick-disconnect retaining nut to prevent disconnection. Maximum connector torque: 6 ft-lbs.

  - Must be installed such that the connector is protected from impact and unauthorized disconnection. The method of protection can include conduit (e.g. pole, pendent), enclosed raceway, a listed enclosure suitable for the intended use, and/or by inaccessible location that excludes possible impact damage.
- ATEX / IECEx Installations; additional specific conditions of use
  - The Beacon shall only be installed in areas with low risk of mechanical impact.
  - Transient protection shall be provided at a level not exceeding 140% of the peak rated voltage at the supply terminals of the Beacon.
  - For Zone 2: When the equipment is mounted to an external enclosure, the external enclosure shall be rated ATEX/IECEx Zone 2 IP54 minimum, in accordance with IEC/EN 60079-0. To maintain the IP64 rating for the overall assembly of beacon and external enclosure, the external enclosure and any fittings used must be rated IP64 minimum.
  - For Zone 22: When the equipment is mounted to an external enclosure, the external enclosure shall be rated ATEX/IECEx Zone 22 IP64 minimum, in accordance with IEC/EN 60079-0 and IEC/EN 60079-31.
- U.S. / Canadian Zone Installations; additional specific conditions of use
  - Only non-audible K100 Pro Beacon models with 2 m integral cable.
  - The Beacon shall only be installed in areas with low risk of mechanical impact.
  - Transient protection shall be provided at a level not exceeding 140% of the peak rated voltage at the supply terminals of the Beacon.
  - The beacons must be mounted to a conduit/standoff pipe or on an external enclosure. The K100 beacons must be installed on the conduit/standoff pipe or external enclosure in a way that ensures all field wiring is fully contained within the conduit/standoff pipe or external enclosure.
    - For Zone 2: When the beacon is mounted to an external enclosure, the external enclosure shall be rated Zone 2 IP54 minimum, in accordance with UL/CSA 60079-0. To maintain the IP64 rating for the overall assembly of beacon and external enclosure, the external enclosure and any fittings used must be rated IP64 minimum.
    - For Zone 22: When the beacon is mounted to an external enclosure, the external enclosure shall be rated Zone 22 IP64 minimum, in accordance with UL/CSA 60079-0 and UL/CSA 60079-31.

[5] Aggressive substances—for example, acidic liquids or gases that may attack metals, or solvents that may affect polymeric materials.
[6] Suitable precaution—for example, regular checks as part of routine inspections or establishing from the materials data sheet that is resistant to specific chemicals.

© Banner Engineering Corp. All rights reserved.

Mechanical Installation

Install in a location free of visual obstructions, protected from impact and/or an inaccessible location that minimizes possible impact damage. The K100 Beacon, the cable, and the quick-disconnect connector (if used) must be protected from environmental influences, impact, and unauthorized disconnection (for example, inaccessible location).

The installation of the K100 Beacon must comply with all applicable wiring methods in accordance with the relevant local regulations and the authority having jurisdiction. The K100 Beacon is supplied with a foam washer, an M36 knurl nut, and a 105 mm protective shield.

The K100 has three typical mounting methods:

Enclosure-Mounted

Use only a listed enclosure suitable for the intended use and appropriately rated for the application and the environment as specified in the Specific Conditions of Use section (above). The K100 Beacon requires a 36 mm hole and the enclosure must extend beyond the K100 housing.

The ingress protection (IP rating) of enclosures may be invalidated by the installation of the beacon.

Proper installation of the foam washer is between the K100 Beacon and the enclosure. The M36 knurl nut is installed on the interior of the enclosure and torqued to a maximum of 5.0 N·m (44 inch-lbf).

LMB36RA Mounting Bracket

Mount the LMB36RA, or similar L- or flat-plate bracket (customer supplied), in the desired location that complies with the above general mechanical installation requirements.

To maintain ATEX/IECEx and U.S./Canadian Zone ratings, the installation must use the 105 mm protective shield. The protective shield is mounted between the K100 Beacon and the mounting bracket; the M36 knurl nut is installed once the K100 Beacon is in place and torqued to a maximum of 5.0 N·m (44 inch-lbf).

The K100 Beacon cable and the quick-disconnect connector (if used) may be required to be located within 3/4-14 NPT conduit (see below) or race/cable tray as described by relevant local regulations.

Conduit / Standoff Pipe

Identify the desired mounting location that complies with the above general mechanical installation requirements, and route the conduit as described by relevant local regulations. Depending on the application, conduit sealing methods may be required at the connection of the conduit and the K100 Beacon (that is, the metal-to-plastic junction will not be gas-tight).

To maintain ATEX/IECExand U.S./Canadian Zone ratings, the installation must use the 105 mm protective shield. The protective bracket is mounted on the base of the K100 Beacon using the M36 knurl nut torqued to a maximum of 5.0 N·m (44 inch-lbf). Once the protective bracket is installed, the K100 Beacon assembly can be fitted onto the 3/4-14 NPT conduit/pipe and tightened to a maximum torque of 4.0 N·m (35 inch-lbf).

Wiring Diagrams

Diagram	Key
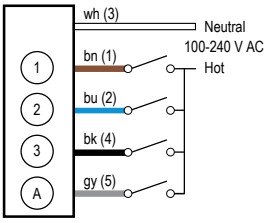	1 = Brown 2 = Blue 3 = White 4 = Black 5 = Gray

An "X" denotes an active input.

For example: When Input 1 and Input 3 are both active, the indicator will be Color 1 Flashing at 1 Hz. Refer to model number scheme in "Models" on page 1 to determine individual colors.

Default Configuration

Wiring				Operating Mode/Function	
Brown (Input 1)	Blue (Input 2)	Black (Input 3)	Gray (Input 4)	Non-Audible	Audible
X				Color 1 Steady	Color 1 Steady
	X			Color 2 Steady	Color 2 Steady
		X		Color 3 Steady	Color 3 Steady

Continued on page 4

© Banner Engineering Corp. All rights reserved.
www.bannerengineering.com

Continued from page 3

Wiring				Operating Mode/Function	
Brown (Input 1)	Blue (Input 2)	Black (Input 3)	Gray (Input 4)	Non-Audible	Audible
X		X		Color 1 Flashing at 1 Hz	Color 1 Flashing at 1 Hz
X	X			Color 2 Flashing at 1 Hz	Color 2 Flashing at 1 Hz
	X	X		Color 3 Flashing at 1 Hz	Color 3 Flashing at 1 Hz
X	X	X		Color 3, 3-pulse Strobe	Color 3, 3-pulse Strobe
			X	Off	Audible Steady, Frequency 2.5 KHz, Volume High
X			X	Color 1 Steady	Color 1 Steady, Audible Steady, Frequency 2.5 KHz, Volume High
	X		X	Color 2 Steady	Color 2 Steady, Audible Steady, Frequency 2.5 KHz, Volume High
		X	X	Color 3 Steady	Color 3 Steady, Audible Steady, Frequency 2.5 KHz, Volume High
X		X	X	Color 1 Flashing at 1 Hz	Color 1 Flashing at 1 Hz, Audible Steady, Frequency 2.5 KHz, Volume High
X	X		X	Color 2 Flashing at 1 Hz	Color 2 Flashing at 1 Hz, Audible Steady, Frequency 2.5 KHz, Volume High
	X	X	X	Color 3 Flashing at 1 Hz	Color 3 Flashing at 1 Hz, Audible Steady, Frequency 2.5 KHz, Volume High
X	X	X	X	Color 3, 3-pulse Strobe	Color 3, 3-pulse Strobe, Audible Steady, Frequency 2.5 KHz, Volume High

Specifications

Supply Protection Circuitry

Protected against reverse polarity and transient voltages

Leakage Current Immunity

400 µA

The use of relay output PLC is recommended since there is no leakage current. Solid state output PLCs often have leakage current above 1 mA and, therefore, turn the light on in the off state. To counteract the leakage current, a shunt resistor must be used. A resistor must be applied from the neutral wire of the device to the hot wire of each channel of the device.

Indicator Response Time

On Response: 350 ms (maximum)

Off Response: 20 ms (maximum)

Audible Characteristics

Sound Intensity at 2.5 KHz, at 1 m (typical):

Low volume setting: 93 dB
Medium volume setting: 96 dB
High volume setting: 101 dB

Construction

Base, Dome, and Nut: Polycarbonate

105 mm protective shield: Stainless steel

Operating Conditions

–40 °C to +60 °C (–40 °F to +140 °F)

90% at +50 °C maximum relative humidity (non-condensing)

Storage Temperature: –40 °C to +70 °C (–40 °F to +158 °F)

Connections

2 m (6.5 ft) integral ITC-ER PVC-jacketed cable:

PLTC and ITC-ER (UL 2095) 22 AWG (0.34 mm^2), 105°C, 300 V
Jacket & Conductor Insulation: PVC
Jacket Diameter: 5.6 mm

Integral 5-pin Dual-key (M12-style) male quick-disconnect connector:

1/2-20UNF
Aluminum Black Anodize

Models with a quick disconnect require a mating cordset. Specific cordset will be determined by installation requirements, at a minimum:

5-pin Dual-key (M12-style) female quick-disconnect cordset (see "Cordsets" on page 7)
Dual-key connector must have threaded 1/2-20UNF retaining nut

Multiconductor cable: UL AWM 2517, 24 AWG (0.25 mm^2) wire, rated ≥ 80 °C

Mounting

M36 by 2.0 threaded base, maximum torque 5.0 N·m (44 inch-lbf)

Interior 3/4-14 NPT Thread

Mounting nut included

Adjacent Unit Mounting Separation Distance

Minimum: 0 in (mounted with unit flanges touching)

© Banner Engineering Corp. All rights reserved.
www.bannerengineering.com

Approvals

NEC and CEC (cULus)

Gas and Vapors: Class I Div 2 Groups ABCD T4
Dust and Fibers/flyings: Class II Div 2 Groups FG T6; Class III Div 1 and Div 2 T6
NOIV(7) E530817-Vol1-Sec1

ATEX/IECEx

Only non-audible K100 Pro Beacon models with 2 m integral cable

Gas and Vapors: II 3 G Ex ec IIC T4 Gc (Group IIC Zone 2)

Dust: II 3 D Ex tc IIIC T85°C Dc (Group IIIC Zone 22)
UL 24 ATEX 3240X
IECEx UL 24.0047X

U.S. and Canadian Zone Certification

Only non-audible K100 Pro Beacon models with 2 m integral cable
Must be enclosed with a protected conduit or suitable enclosure as detailed in the specific conditions of use
Class I Zone 2, AEx ec IIC T4 Gc
Class I Zone 2, Ex ec IIC T4 Gc
Zone 22, AEx tc IIIB T85°C Dc
Zone 22, Ex tc IIIB T85°C Dc





Maximum Input Power

Light Only: 12.33 W

Light and Audible: 13.7 W

Vibration and Mechanical Shock

Meets IEC 60068-2-6 requirements (Vibration: 10 Hz to 55 Hz, 1.0 mm amplitude, 5 minutes sweep, 30 minutes dwell)

Meets IEC 60068-2-27 requirements (Shock: 30G 11 ms duration, half sine wave)

Impact: IK10 (60068-2-75)

Environmental Rating

UL Type 4X

IP66, IP69K per ISO 20653. IP64 when mounted on to an enclosure.

LED Lifetime

Lumen maintenance L_{70}

When operating within specifications, output decreases less than 30% after 42,000 hours

Certifications

Banner Engineering BV
Park Lane, Culliganlaan 2F bus 3
1831 Diegem, BELGIUM

E530817

Supply Voltage and Current

100 V AC to 240 V AC, 50 Hz to 60 Hz

Voltage	Maximum Current (mA AC at 60 Hz)			
	Steady On, Flash, or Strobe Function[7]		Rotate Function	
	Light Only	Light & Audible	Light Only	Light & Audible
100	140	154	96	100
230	78	85	62	68

Default Indicator Characteristics

Color	Dominant Wavelength (nm) or Color Temperature (CCT)	Color Coordinates[8]		Lumen Output (Typical at 25 °C)
		x	y	
Green	528 nm	0.1603	0.6973	360
Yellow	589 nm	0.5557	0.4276	525
Red	625 nm	0.6999	0.2982	155
Blue	475 nm	0.1167	0.1121	165
White	5000K	0.332	0.3433	600

Internal temperature compensation circuitry: Reduces the Lumen Output to decrease the unit internal operating temperature. The amount of reduction is dependent on the ambient operating temperature, supply voltage, color, and/or audible functions being utilized.

Required Overcurrent Protection

WARNING: Electrical connections must be made by qualified personnel in accordance with local and national electrical codes and regulations.

Overcurrent protection is required to be provided by end product application per the supplied table.

Overcurrent protection may be provided with external fusing or via Current Limiting, Class 2 Power Supply.

Supply wiring leads < 24 AWG shall not be spliced.

For additional product support, go to www.bannerengineering.com.

Supply Wiring (AWG)	Required Overcurrent Protection (A)	Supply Wiring (AWG)	Required Overcurrent Protection (A)
20	5.0	26	1.0
22	3.0	28	0.8
24	1.0	30	0.5

(7) Flash or Strobe Mode: Peak current, operating at 50% duty cycle or less.
(8) Refer to CIE 1931 chromaticity diagram or color chart, to show equivalent color with indicated color coordinates.

Photometric Data

Multiply the values shown in the chart by the maximum candela values in the Max. Candela table:

© Banner Engineering Corp. All rights reserved.
www.bannerengineering.com

Polar Candela Distribution

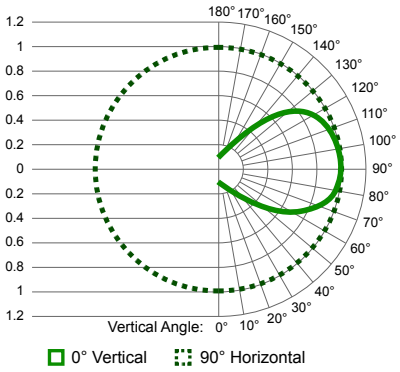

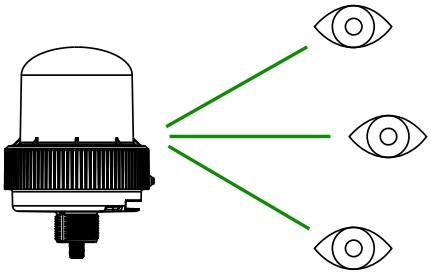

Base Candela

Green	46
Yellow	67
Red	20
Blue	21
White	76

Candela Viewing Angle Example – Red

Angle	Factor	Base[9]	Candela
120 (top view)	0.7	20	14
90 (side view)	1	20	20
60 (bottom view)	0.7	20	14

Dimensions

All measurements are listed in millimeters [inches], unless noted otherwise. The measurements provided are subject to change.

Standard Models

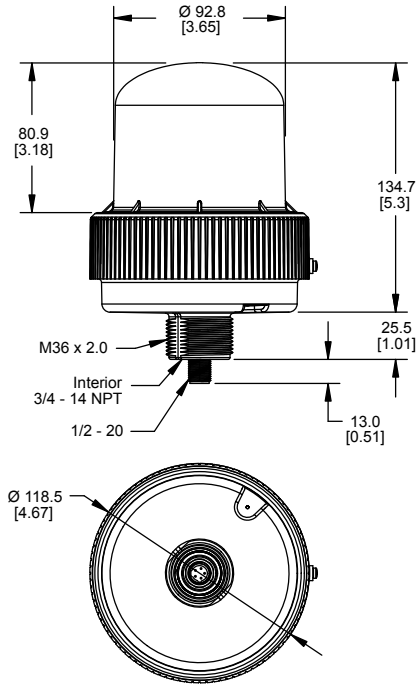

Audible Models

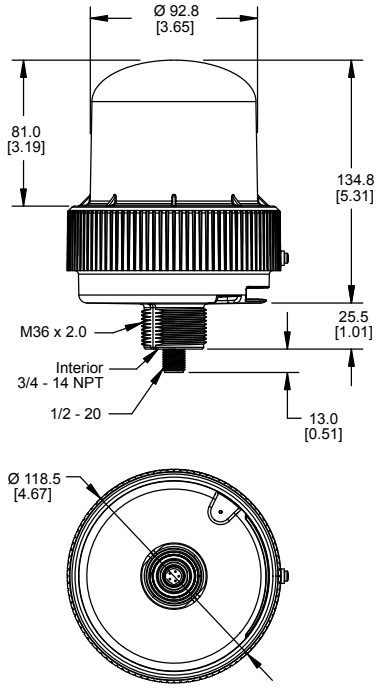

[9] Red shown. See Base Candela table.

© Banner Engineering Corp. All rights reserved.
www.bannerengineering.com

Accessories

Cordsets

All measurements are listed in millimeters, unless noted otherwise. The measurements provided are subject to change.

MQAC2-5xx specifications:

- 1/2-20UNF female retaining nut
- AWM (UL 2517) 22 AWG, 105 °C, 300 V
- Jacket & Conductor Insulation: PVC
- Jacket Diameter: 5.6 mm

5-Pin Single-Ended 1/2-in Dual Key Female Cordsets				
Model	**Length**	**Style**	**Dimensions**	**Pinout (Female)**
MQAC2-506	2 m (6.56 ft)	Straight	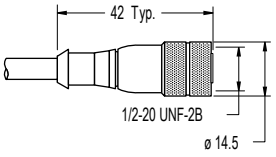	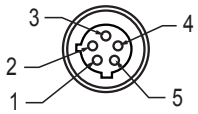 1 = Brown 2 = Blue 3 = White 4 = Black 5 = Gray
MQAC2-515	5 m (16.4 ft)			
MQAC2-530	9.14 m (30 ft)			

Brackets

LMB36RA • Indicator light right-angle mounting • 36 mm mounting hole • Stainless steel	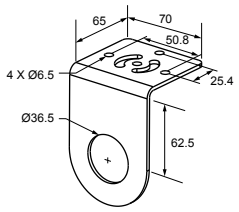

Elevated Mount System

Model			Features	Components
Black Anodized Aluminum ¾ in. NPT	**Black Anodized Aluminum ½ in. NPT**	**Clear Anodized Aluminum ½ in. NPT**		
SOP-E34-150A 150 mm (6 in) long	**SOP-E12-150A** 150 mm (6 in) long	**SOP-E12-150AC** 150 mm (6 in) long	• Elevated-use stand-off pipe • Black anodized aluminum or clear anodized aluminum surface • Threaded at both ends • Compatible with most industrial environments	
SOP-E34-300A 300 mm (12 in) long	**SOP-E12-300A** 300 mm (12 in) long	**SOP-E12-300AC** 300 mm (12 in) long		
SOP-E34-600A 600 mm (24 in) long	**SOP-E12-600A** 600 mm (24 in) long	—		
SOP-E34-900A 900 mm (36 in) long	**SOP-E12-900A** 900 mm (36 in) long	**SOP-E12-900AC** 900 mm (36 in) long		

Pipe Mounting Flange			
Model	**Description**	**Construction**	
SA-F12	• Elevated-use stand-off pipes (½ in, NPSM/ DN15) • M5 mounting hardware and nitrile gasket included	Die-cast zinc base with black paint	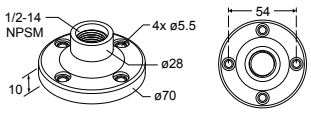

© Banner Engineering Corp. All rights reserved.
www.bannerengineering.com

Shields

105 mm Protective Shield
- Impact protection
- Stainless steel
- See "Specific Conditions for Use and General Notes" on page 2 and "Mechanical Installation" on page 3

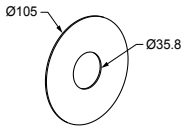

Repairs and Translations

Obtain assistance with product repairs by contacting your local Banner Engineering Corp distributor or by calling Banner directly at (763) 544-3164. Access literature translated into your native language on the Banner website at www.bannerengineering.com or contact Banner directly at (763) 544-3164.

Para reparaciones de productos, por favor contacte a su distribuidor local de Banner Engineering o llame a Banner directamente al 00 1 (763) 544-3164. Vea la literatura traducida en su idioma en el sitio web Banner en www.bannerengineering.com o comuníquese con Banner directamente al 00 1 (763) 544-3164.

Pour vous aider lors de la réparation de produits, contactez votre distributeur Banner local our appelez directement Banner au (763) 544-3164. La documentation traduite dans votre langue est disponible sur le site internet de Banner www.bannerengineering.com ou contactez directement Banner au (763) 544-3164.

请联系当地的 Banner Engineering Corp 经销商或直接致电 Banner +1 (763) 544-3164，以获得产品维修帮助。请访问邦纳网站 www.bannerengineering.com 或直接拨打 +1 (763) 544-3164 联系邦纳，获取翻译成您母语的资料。

제품 수리에 대한 지원은 지역 Banner Engineering Corp 대리점에 문의하거나 Banner에 직접 (763) 544-3164로 문의하실 수 있습니다. 사용자의 모국어로 번역된 자료는 Banner 웹사이트 www.bannerengineering.com에서 액세스하거나 Banner에 직접 (763) 544-3164로 문의하실 수 있습니다.

Banner Engineering Corp Limited Warranty

Banner Engineering Corp. warrants its products to be free from defects in material and workmanship for one year following the date of shipment. Banner Engineering Corp. will repair or replace, free of charge, any product of its manufacture which, at the time it is returned to the factory, is found to have been defective during the warranty period. This warranty does not cover damage or liability for misuse, abuse, or the improper application or installation of the Banner product.

THIS LIMITED WARRANTY IS EXCLUSIVE AND IN LIEU OF ALL OTHER WARRANTIES WHETHER EXPRESS OR IMPLIED (INCLUDING, WITHOUT LIMITATION, ANY WARRANTY OF MERCHANTABILITY OR FITNESS FOR A PARTICULAR PURPOSE), AND WHETHER ARISING UNDER COURSE OF PERFORMANCE, COURSE OF DEALING OR TRADE USAGE.

This Warranty is exclusive and limited to repair or, at the discretion of Banner Engineering Corp., replacement. **IN NO EVENT SHALL BANNER ENGINEERING CORP. BE LIABLE TO BUYER OR ANY OTHER PERSON OR ENTITY FOR ANY EXTRA COSTS, EXPENSES, LOSSES, LOSS OF PROFITS, OR ANY INCIDENTAL, CONSEQUENTIAL OR SPECIAL DAMAGES RESULTING FROM ANY PRODUCT DEFECT OR FROM THE USE OR INABILITY TO USE THE PRODUCT, WHETHER ARISING IN CONTRACT OR WARRANTY, STATUTE, TORT, STRICT LIABILITY, NEGLIGENCE, OR OTHERWISE.**

Banner Engineering Corp. reserves the right to change, modify or improve the design of the product without assuming any obligations or liabilities relating to any product previously manufactured by Banner Engineering Corp. Any misuse, abuse, or improper application or installation of this product or use of the product for personal protection applications when the product is identified as not intended for such purposes will void the product warranty. Any modifications to this product without prior express approval by Banner Engineering Corp will void the product warranties. All specifications published in this document are subject to change; Banner reserves the right to modify product specifications or update documentation at any time. Specifications and product information in English supersede that which is provided in any other language. For the most recent version of any documentation, refer to: www.bannerengineering.com.

For patent information, see www.bannerengineering.com/patents.

Contact Us

Banner Engineering Corp. headquarters is located at: 9714 Tenth Avenue North | Plymouth, MN 55441, USA | Phone: + 1 888 373 6767

For worldwide locations and local representatives, visit www.bannerengineering.com.

© Banner Engineering Corp. All rights reserved.
www.bannerengineering.com