D10 Expert Series - Small Object Counter

Original Instructions
p/n: 146132 Rev E
02-Mar-26
© Banner Engineering Corp. All rights reserved. www.bannerengineering.com

ПРОМЭЛЕКТРОНИКА/ sales@prom-elec.com

Contents

Chapter 1 Features and Models 3
Overview 4
Port Locations 5
Health Mode Alarm 5
Specifications 5
Dimensions 6
Included Bracket Dimensions 7
Fiber Optic Array Dimensions 7

Chapter 2 Wiring Diagrams 9

Chapter 3 Configuration Instructions 10
Programming Options 10
Sensor Programming 10
Sensor Setup 10
Advanced Setup 12
Push Button Lockout 13
Gate Input 13
Single-Point Window SET 14

Chapter 4 Accessories 15

Chapter 5 Banner Engineering Corp Limited Warranty 16

© Banner Engineering Corp. All rights reserved. www.bannerengineering.com

Chapter Contents

Overview 4
Port Locations 5
Health Mode Alarm 5
Specifications 5

Chapter 1 Features and Models

Advanced sensor for small object counting

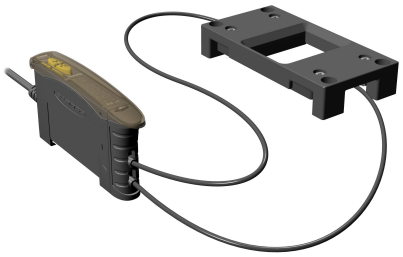

- Easy-to-set selectable threshold with automatic compensation algorithm
- Automatic compensation algorithm compensates for dust or contamination on the fiber optic array and for ambient temperature changes
- 16-bit microcontroller and 12-bit Analog-to-Digital converter (ADC) for high-performance, low-contrast sensing
- Easy-to-read 4-digit display for Health Mode, Percentage Blocked, Signal Level, or Counter Mode readout, plus indicators for a continuous readout of operating status (user configurable)
- Sleek, ultra-slim 10 mm housing, mounts to a standard 35 mm DIN rail
- Single discrete output plus Health Mode output to indicate preventative maintenance is required
- Three-mode power and speed selection to optimize detection reliability
- Dynamic event stretcher to ensure one output per event — especially for gel-cap style pills
- Visible red (680 nm) sensing beam
- Models available with 2 m or 9 m (6.5 ft or 30 ft) cable or integral M8 quick-disconnect

Sensors		
Models	**Cables**	**Discrete Outputs**
D10DNCFPQ	6-pin M8 QD	NPN
D10DPCFP	2 m (6.5 ft) cable	PNP
D10DPCFPQ	6-pin M8 QD	

The following models are no longer available for order but are still covered by the information in this document.

Sensors		
Models	**Cables**	**Discrete Outputs**
D10DNCFP	2 m (6.5 ft) cable	NPN

Fiber Optic Arrays			
Models [1]	**Detection Window Dimensions**	**Fiber Exit**	**Minimum Object Size** [2]
PFCVA-10X25-S	10 mm x 25 mm	Side exit	1.5 mm
PFCVA-10X25-E		End exit	
PFCVA-25X25-S	25 mm x 25 mm	Side exit	3 mm
PFCVA-25X25-E		End exit	
PFCVA-34X25-S	34 mm x 25 mm	Side exit	4 mm
PFCVA-34X25-E		End exit	

To order the 9 m (30 ft) cable models, add the suffix "W/30" to the cabled model number. For example: D10DNCFP W/30. Models with a quick disconnect connector require a mating cable.

[1] Custom fiber arrays and mounting configurations are possible. Consult factory for assistance with your small object counting application.
[2] With 2% threshold offset percentage

© Banner Engineering Corp. All rights reserved.
www.bannerengineering.com

WARNING:

- **Do not use this device for personnel protection**
- Using this device for personnel protection could result in serious injury or death.
- This device does not include the self-checking redundant circuitry necessary to allow its use in personnel safety applications. A device failure or malfunction can cause either an energized (on) or de-energized (off) output condition.

Overview

1. Counting output indicator
2. Arrow icons
3. Health mode output indicator
4. 4-digit display
5. Light/dark operate, clock, and lock icons
6. Programming push buttons

D10D Features

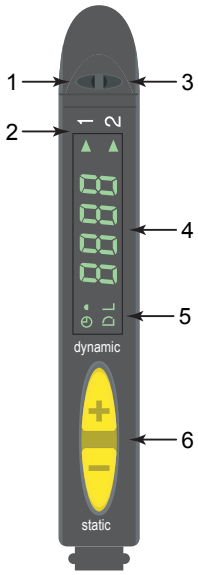

The D10 Expert Small Object Counter sensor is a high-performance plastic fiber optic amplifier that has been optimized for small object counting using through-beam fiber optic arrays. Fiber optic arrays emit and receive light over an area instead of a narrow beam. Having an area of light makes alignment and positioning control of the object less critical than using single point emitter and receiver fiber optic assemblies. Because the object only breaks part of the fiber optic array, reliable detection requires very precise thresholds, an auto compensation tracking algorithm, and high speed electronics to make split-second decisions.

The setup and configuration of the advanced D10D sensor has been reduced to the act of applying power to the device with the fiber optic assemblies rigidly mounted in position. The user also has access to a comprehensive collection of setup and configuration parameters through the sensor's advanced setup menu, but for most applications the default options provide superb performance and reliability.

Upon power-up, the clear-state light level is measured and appropriate switching thresholds are established, making the fiber optic sensor system a stable, fast, and reliable small object counter. The clear-state light level can be reset by performing a 2 second hold on the dynamic (+) push button or single-clicking the remote line.

Continued reliable operation is ensured as the thresholds adapt to changing signal levels over time using Banner Engineering's auto compensation tracking algorithm. The sensor continuously tracks the clear-state light level and makes fine adjustments to the switching thresholds as required because of dust or contamination building up on the fiber optic array and for ambient temperature changes.

The sensor features either two NPN or two PNP outputs, depending on your model. Each output serves a different purpose. The discrete output 1 (white wire) switches whenever an object breaks the fiber optic array and can be used for counting. The Health Mode output 2 (black wire) switches when the fiber optic array becomes contaminated to a point that the auto compensation tracking algorithm cannot sufficiently adjust the thresholds to ensure reliable detection (see "Health Mode Alarm" on page 5).

The duration of the discrete output 1 (white wire) can be increased (stretched) to ensure accurate counting. The amount of increase is a user configurable percentage of the detection event duration; the default increase time is 50% more than the event duration. Banner calls this feature a Dynamic Event Stretcher (DES), and it prevents errant double counts of translucent gel-caps and other small objects of that type. The DES provides a "smart" OFF-delay that is independent of application speed and can be adjusted from 0% to 100% of the detection event duration.

© Banner Engineering Corp. All rights reserved.
www.bannerengineering.com

Port Locations

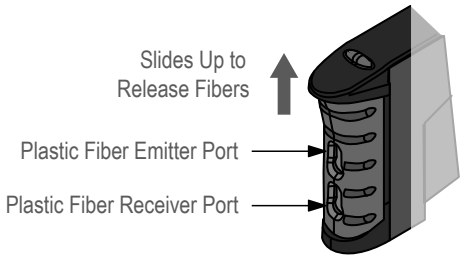

Health Mode Alarm

The Health Mode Alarm alerts you when preventative maintenance becomes necessary to ensure reliable sensing. The Health Mode output 2 is Active when the system is OK and operating normally. Health Mode output 2 becomes Inactive when the system is in a marginal state because of contamination. The system still operates normally and can detect small objects, but is nearing the alarm state. When the system is completely contaminated and unable to ensure reliable sensing, the system goes into the alarm state. In the alarm state, the discrete output 1 is forced to the blocked state and can no longer be used to detect small objects.

The sensor may enter Health Mode Alarm for any of these reasons:

1. When first powered up; the fiber optic array may already be contaminated
2. If the Window SET procedure fails, indicating the fiber optic array is contaminated and the sensor could not set a valid clear-state light level for reliable detection
3. If the fiber optic array is contaminated enough that the auto compensation tracking algorithm cannot sufficiently adjust the thresholds to ensure reliable detection
4. If the fiber optic array is blocked for more than 2 seconds

Return the system to normal operation by cleaning the fiber optic array and performing a Window SET to reset the clear-state light level (see Single-Point Window SET).

Health Model Display [3]		
Display Value	**Outputs and Indicators**	**System Status**
25 to 100	Discrete output 1: Operational Health Mode output 2: Active Indicators: Arrow Icons 1 & 2 GREEN	OK: system operating normally
1 to 20	Discrete output 1: Operational Health Mode output 2: Inactive Indicators: Arrow Icon 1 Green; Arrow Icon 2 Red	Marginal: System operating normally; preventative maintenance recommended
0	Discrete output 1: Forced to Blocked State (i.e. in dark operate, the output is conducting) Health Mode output 2: Inactive Indicators: Arrow Icons 1 & 2 Red	Alarm: System not operational; system maintenance required

Specifications

Supply Voltage and Current

12 to 24 V DC (10% maximum ripple) at less than 65 mA, exclusive of load

[3] Sensor display must be in Health Mode (see Sensor Setup)

© Banner Engineering Corp. All rights reserved.
www.bannerengineering.com

Supply Protection Circuitry
Protected against reverse polarity and transient voltage

Output Protection Circuitry
Protected against false pulse on power-up and continuous short-circuit

Required Fiber Optics
PFCVA models (Custom fiber arrays and mounting configurations are possible. Consult factory for assistance with your small object counting application.)

Sensing Beam
Visible red, 680 nm

Output Configuration
2 NPN or 2 PNP, depending on model

Output Rating
150 mA maximum load

OFF-state leakage current: < 10 µA at 24 V DC

ON-state saturation voltage: NPN < 1.5 V at 150 mA load; PNP < 2.5 V at 150 mA load

Output Response Time
Programmable, 150 µs, 225 µs, 300 µs

NOTE: < 1 second delay on power-up; outputs do not conduct during this time.

Connections
PVC-jacketed 2 m or 9 m (6.5 ft or 30 ft) 6-wire integral cable or integral 6-pin M8 quick-disconnect, depending on the model

Adjustments
Push-button or remote programming of threshold offset percentage, light/dark operate, Dynamic Event Stretcher (DES), display, and power/speed

Installation
35 mm DIN rail or included mounting bracket

Indicators
Four-digit digital display, 2 arrow icons, push-button lockout, Dynamic Event Stretcher, light/dark operate selection, and 2 amber output LEDs

Certifications
CE

Construction
Black ABS/polycarbonate alloy (UL94 V-0 rated) housing, clear polycarbonate cover

Environmental Rating
NEMA 1, IEC IP50

Operating Conditions
Temperature: –20 to 55 °C (–4 to 131 °F)

Storage Temperature: –20 to 80 °C (–4 to +75 °F)

Max. Rel. Humidity: 90% at 50 °C (non-condensing)

Number of Devices, Stacked	Ambient Temp Rating	Load Specification
3	55 °C	150 mA
7	50 °C	50 mA
10	45 °C	50 mA

Dimensions

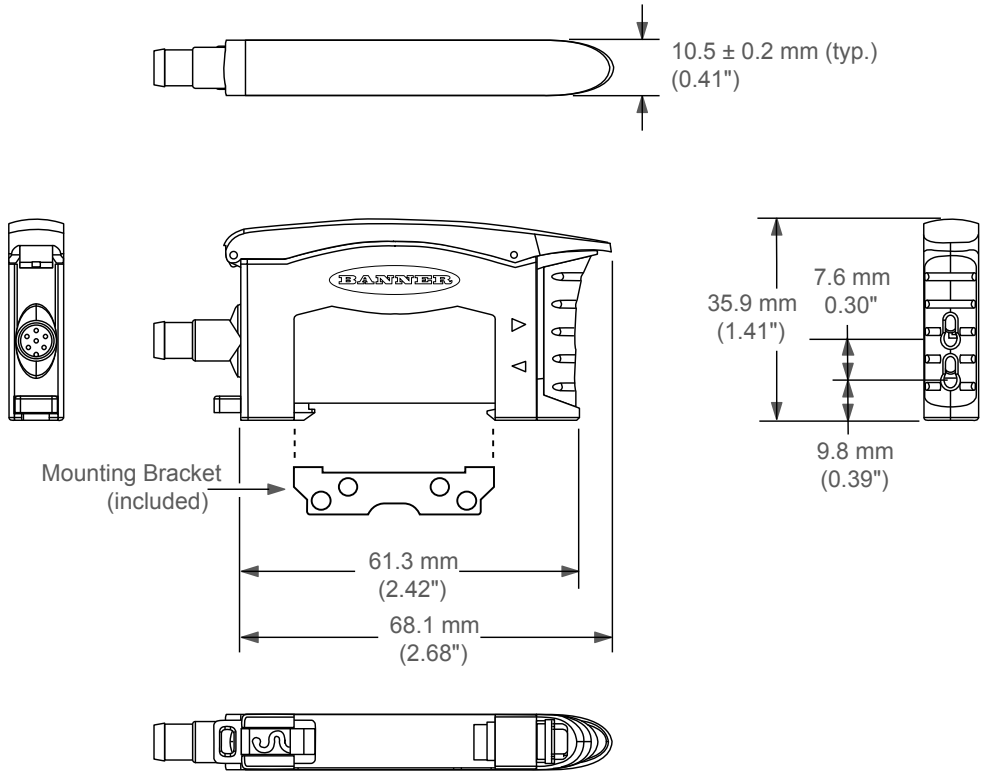

© Banner Engineering Corp. All rights reserved.
www.bannerengineering.com

Included Bracket Dimensions

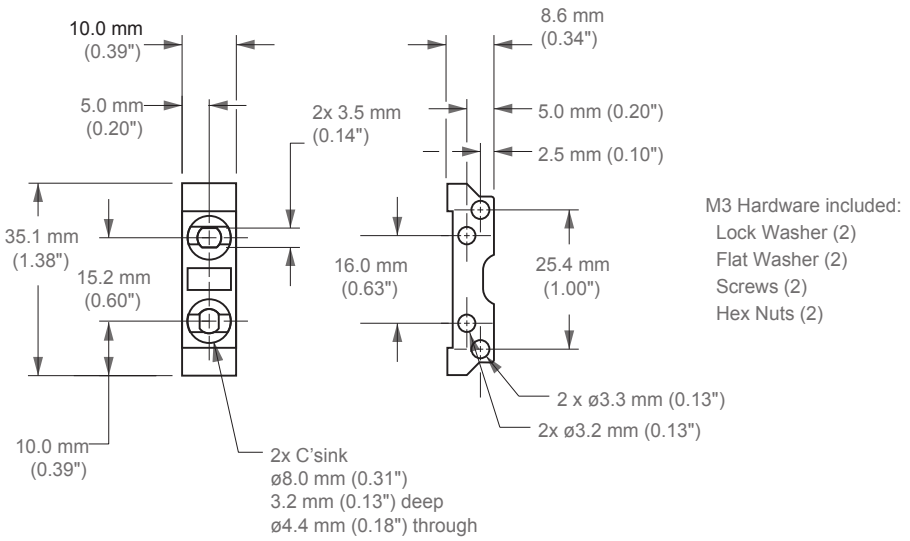

Fiber Optic Array Dimensions

PFCVA-10X25-S and PFCVA-10X25-E

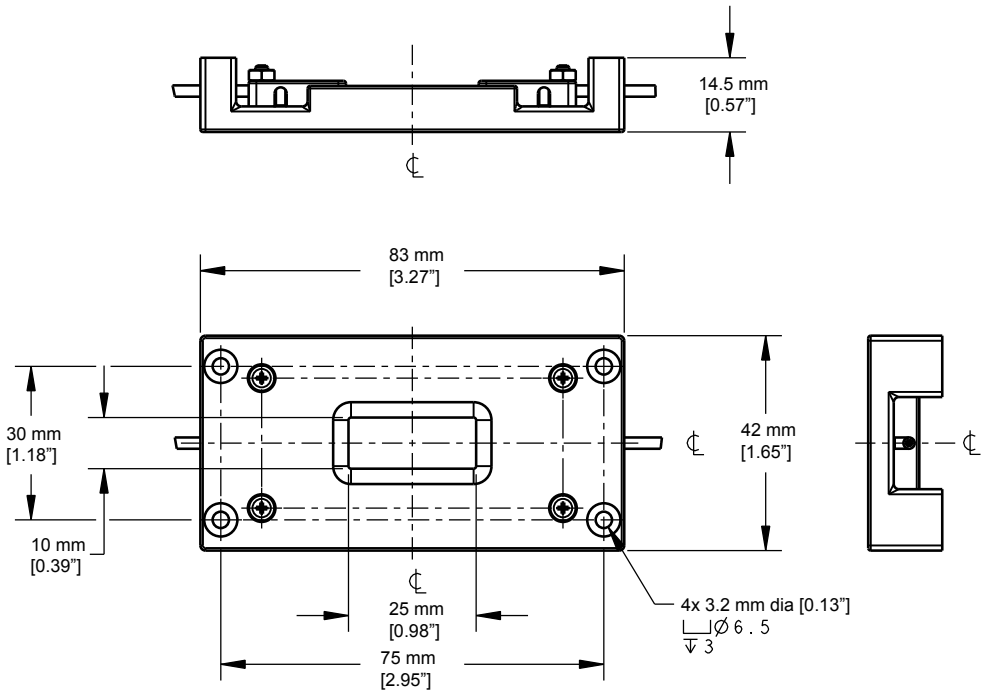

© Banner Engineering Corp. All rights reserved.
www.bannerengineering.com

PFCVA-25X25-S and PFCVA-25X25-E

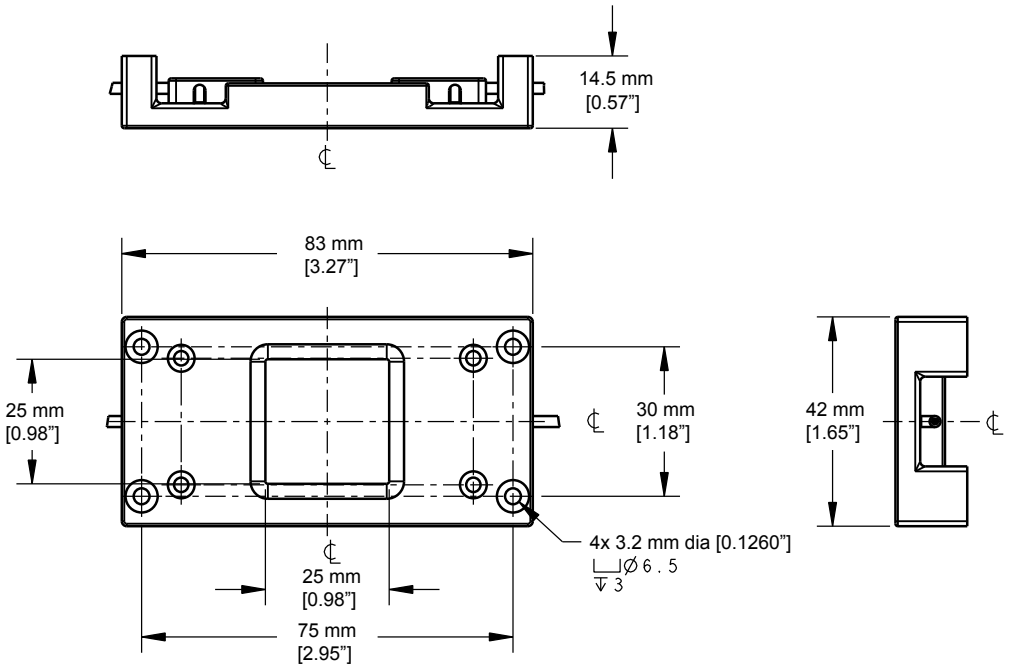

PFCVA-34X25-S and PFCVA-34X25-E

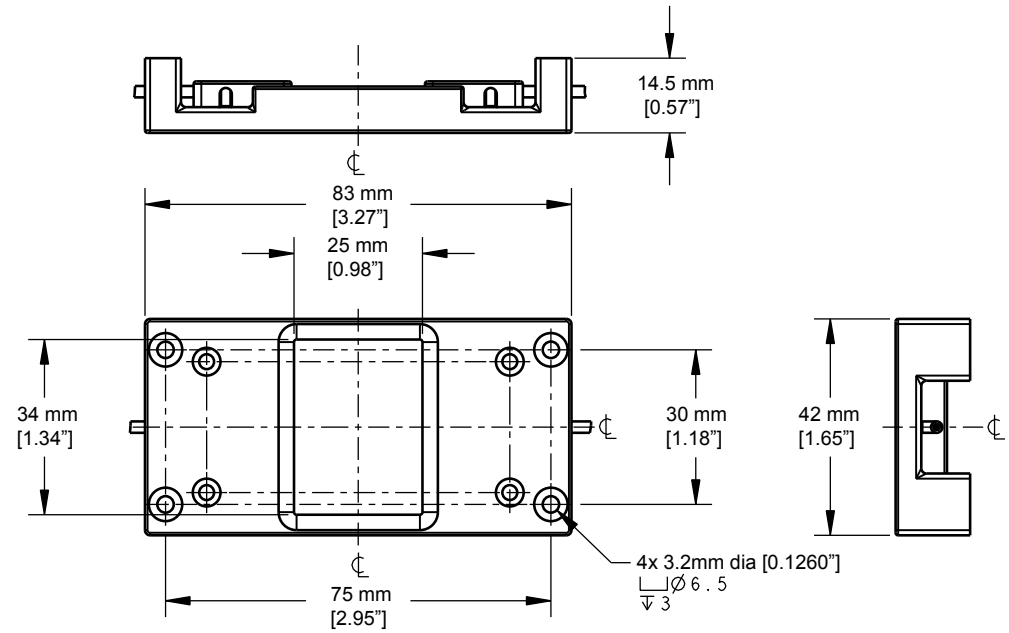

© Banner Engineering Corp. All rights reserved.
www.bannerengineering.com

Chapter Contents

Chapter 2 Wiring Diagrams

Wiring for quick disconnect (QD) models are functionally identical.

NPN output models

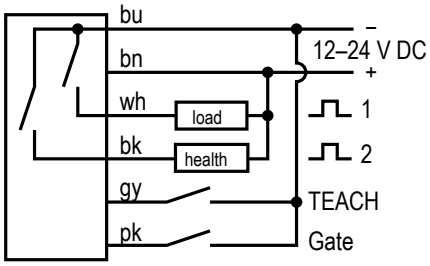

PNP output models

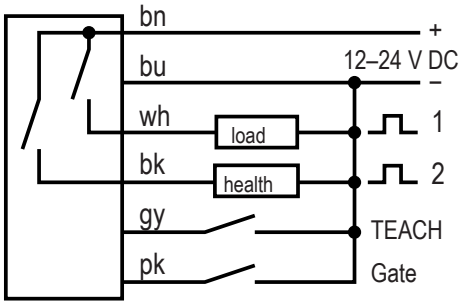

© Banner Engineering Corp. All rights reserved.
www.bannerengineering.com

Chapter Contents

Programming Options 10
Sensor Programming 10
Sensor Setup 10

Chapter 3 Configuration Instructions

Programming Options

Light/Dark Operate Selection. Toggle to select the condition for which the output will conduct: when the object is present or when the object is absent.

Threshold Offset Percentage. 2%, 3%, 4%, 5%, 10%

Dynamic Event Stretcher (DES) Selection. The output is held ON (OFF in Light Operate) for a percentage of time longer than the detection event duration. Options: 0%, 25%, 33%, 50%, 100% (e.g., If the Dynamic Event Stretcher was set at 50%, a 1 ms event would be stretched to 1.5 ms)

Display Orientation. Normal or inverted

Display Mode. Health Mode (100%–0%); Percentage Blocked (0%–100%); Signal Level (ADC value); or Counter Mode (0–9999)

Power Level/Speed Selection. High-Speed (HS) (150 µs response, 50 µs repeatability); High-Power (HP) (225 µs response, 75 µs repeatability); or Super High-Power (SHP) (300 µs response, 100 µs repeatability)

Factory Default Settings. The following settings are preset at the factory; revert sensor to factory defaults using Advanced Setup procedure (see "Advanced Setup" on page 12)

- Dark Operate (DO)
- 50% DES
- Health Mode Display
- 2% Threshold Offset Percentage
- Normal Display Orientation
- High Speed (HS)

Sensor Programming

Programming Procedures. Use the Dynamic (+) and Static (-) buttons to access and set programming parameters. For remote programming, connect a switch or digital input to the gray wire (remote line); the length of the individual pulses is equal to the value T when 0.04 seconds ≤ T ≤ 0.8 seconds.

Returning to RUN mode. Exit Setup mode by stepping through the entire Setup process (see "Sensor Setup" on page 10), by escaping out of the Setup process, or by exceeding the 60 second inactivity time-out. To escape out of the Setup process, press and hold both the Static (-) and Dynamic (+) buttons for 2 seconds. (For remote programming, press and hold the remote line for 2 seconds). The sensor always saves the selected settings and returns to Run mode.

Sensor Setup

- Configures sensor display and operating parameters.
- Changes are updated instantly.
- Click Dynamic (+) or double-pulse remote line to select an option.
- Click Static (-) or single-pulse remote line to advance.

Remote input pulse: 0.04 s ≤ T ≤ 0.8 s

1. Access Setup mode.

© Banner Engineering Corp. All rights reserved.
www.bannerengineering.com

Method	Action	Result
Push Button	Press and hold both the Dynamic (+) and Static (-) buttons concurrently for more than 2 seconds	◦ Arrow Icon 1 ON Red ◦ Arrow Icon 2 OFF ◦ Display shows “Threshold Offset Percentage” option. 
Remote Input	Double-pulse the remote line	

2. Select the threshold offset percentage.

Method	Action	Result
Push Button	Click Dynamic (+) to toggle between selections Click Static (-) to save selection and advance to “Light/Dark Operate”	2% to 10% Threshold Offset Percentage: “t 2,” “t 3,” “t 4,” “t 5,” “t 10” 
Remote Input	Double-pulse remote line to toggle between selections Single-pulse the remote line to save selection and advance to “Light/Dark Operate"	

3. Select light operate or dark operate.

Method	Action	Result
Push Button	Click Dynamic (+) to toggle between selections Click Static (-) to save selection and advance to “Dynamic Event Stretcher (DES)”	Light Operate: ◦ Display flashes “lo” ◦ L icon ON 
Remote Input	Double-pulse remote line to toggle between selections Single-pulse the remote line to save selection and advance to “Dynamic Event Stretcher (DES)”	Dark Operate: ◦ Display flashes “do” ◦ D icon ON 

4. Select dynamic event stretcher (DES).

Method	Action	Result
Push Button	Click Dynamic (+) to toggle between selections Click Static (-) to save selection and advance to “Display Mode”	OFF (No DES): ◦ “d 0” ◦ Clock icon OFF 
Remote Input	Double-pulse remote line to toggle between selections Single-pulse the remote line to save selection and advance to “Display Mode”	25%, 33%, 50%, or 100% DES: ◦ “d 25,” “d 33,” “d 50,” “d 100,” ◦ Clock icon ON 

5. Select display mode.

© Banner Engineering Corp. All rights reserved.
www.bannerengineering.com

Method	Action	Result
Push Button	Click Dynamic (+) to toggle between selections Click Static (-) to save selection and advance to "Power/Speed"	Health Mode: “HLth”  Percentage Blocked: “Pctb” 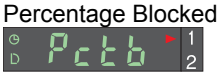 Signal Level: “1234”  Counter Mode: “Cntr” 
Remote Input	Double-pulse remote line to toggle between selections Single-pulse the remote line to save selection and advance to “Power/Speed"	

6. Select the speed and power combination.

Method	Action	Result
Push Button	Click Dynamic (+) to toggle between selections To return to Run mode, click the Static (-) button OR To proceed to Advanced Setup, quad-click Static (-) button	Arrow Icons 1 and 2 ON Red High-speed (150-µs response): “HS”  High-power (225-µs response): “HP” 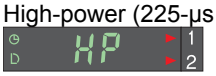 Super-high-power (300-µs response): “SHP” 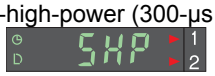 See "Advanced Setup" on page 12.
Remote Input	Double-pulse the remote line to toggle between selections Single-pulse the remote line to save selection and return to RUN mode OR Quad-click the remote line to proceed to Advanced Setup	

Advanced Setup

- Advanced adjustments to previously configured sensor display and operating parameters.
- Quad-click Static (-) or quad-pulse remote line before exiting “Speed and Power Combination” selection to enter this mode
- Click Dynamic (+) or double-pulse remote line to select an option.
- Click Static (-) or single-pulse remote line to advance.
- Changes are updated instantly.

Remote input pulse: 0.04 s ≤ T ≤ 0.8 s

1. Enter Advanced Setup mode.

Method	Action	Result
Push Button	From “Power and Speed” mode, quad-click Static (-) button	◦ Arrow Icons 1 and 2 ON Red ◦ Display shows “Factory Default Settings” option. 
Remote Input	From “Power and Speed” mode, quad-pulse the remote line	

2. Set to the factory default settings.

© Banner Engineering Corp. All rights reserved.
www.bannerengineering.com

Method	Action	Result
Push Button	Click Dynamic (+) to toggle between selections Click Static (-) to advance to “Display Orientation”	Returns to factory default settings Factory Default Settings Not Selected: Display shows “Fd n” 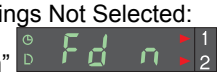 Factory Default Settings Selected: Display shows “Fd y” 
Remote Input	Double-pulse the remote line to toggle between selections Single-pulse the remote line to advance to “Display Orientation”	

3. Set the display orientation.

Method	Action	Result
Push Button	Click Dynamic (+) to toggle between selections Click Static (-) to return to RUN mode	Inverts display to read “upside-down” Normal: 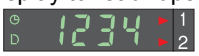 Inverted:  The icons do not invert.
Remote Input	Double-pulse the remote line to toggle between selections Single-pulse the remote line to return to RUN mode	

Push Button Lockout

- Prevents unwanted adjustments or tampering of the push buttons.
- Push buttons can be enabled or disabled only from the remote line and only during normal RUN mode.

Remote input pulse: 0.04 s ≤ T ≤ 0.8 s

Method	Action	Result
Push Button	Not available with push-button programming	Push Buttons Disabled • Display flashes “loc” • Padlock icon appears • Sensor remains in RUN mode  Push Buttons Enabled • Display flashes “uloc” • Padlock icon disappears • Sensor remains in RUN mode 
Remote Input	From RUN mode, quad-pulse the remote line to toggle between selections	

Gate Input

The pink wire is configured as a gate input. When this wire is pulled low (e.g., to the sensor ground), it inhibits the outputs from switching while all other sensor functions continue to be enabled. This feature is useful for controlling when the outputs are allowed to change states. Gate input function response time is 1 millisecond.

© Banner Engineering Corp. All rights reserved.
www.bannerengineering.com

Single-Point Window SET

Single-point Window Set and Offset Percentage (Dark Operate Shown)

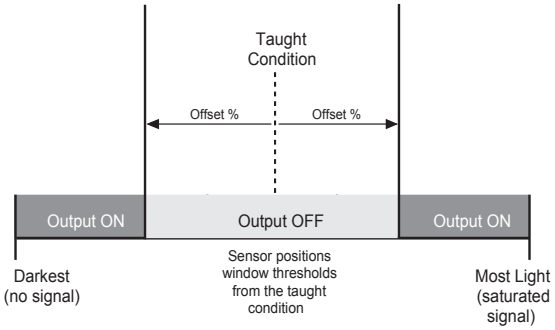

A Window SET sets a single output condition that extends above and below the taught condition by a selectable offset percentage (2, 3, 4, 5, or 10%).

In Dark Operate, a Window SET sets a single OFF condition that extends above and below the taught condition. All other conditions (lighter or darker) result in ON output.

In Light Operate, a Window SET sets a single ON condition that extends above and below the taught condition. All other conditions (lighter or darker) result in OFF output.

Output ON and OFF conditions can be reversed by changing Light/Dark Operate status in SETUP mode.

Remote input pulse: 0.04 s ≤ T ≤ 0.8 s

Set Clear-State Light Level of Single-Point Window		
Method	**Action**	**Result**
Push Button	1. Verify the fiber optic array is clean and clear of any objects. 2. Press and hold Dynamic (+) button for more than 2 seconds.	Display turns OFF and Arrow Icons 1 and 2 toggle 3 times green while the sensor is optimizing system settings. TEACH conditions acceptable: • Display flashes “PASS” • Sensor returns to Run mode with new settings. • Arrow Icons 1 and 2 turn ON Green • Health Mode output 2 Active  TEACH conditions unacceptable: • Display flashes “FAIL” • Arrow Icons 1 and 2 turn ON Red • Health Mode output 2 Inactive 
Remote Input	1. Make sure fiber optic array is clean and clear of any objects. 2. Single-pulse the remote line.	

© Banner Engineering Corp. All rights reserved.
www.bannerengineering.com

Chapter Contents

Chapter 4 Accessories

6-Pin Single-Ended Snap-on M8 Female Cordsets				
Model	**Length**	**Style**	**Dimensions**	**Pinout (Female)**
PKG6Z-2	2 m (6.56 ft)	Straight	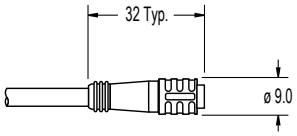	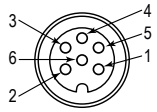 1 - brown 2 = White 3 = Blue 4 = Black 5 = Gray 6 = Pink
PKG6Z-9	9 m (29.53 ft)			
PKW6Z-2	2 m (6.56 ft)	Right-angle	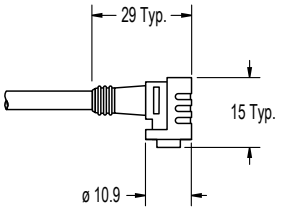	
PKW6Z-9	9 m (29.53 ft)			

© Banner Engineering Corp. All rights reserved.
www.bannerengineering.com

Chapter Contents

Chapter 5 Banner Engineering Corp Limited Warranty

Banner Engineering Corp. warrants its products to be free from defects in material and workmanship for one year following the date of shipment. Banner Engineering Corp. will repair or replace, free of charge, any product of its manufacture which, at the time it is returned to the factory, is found to have been defective during the warranty period. This warranty does not cover damage or liability for misuse, abuse, or the improper application or installation of the Banner product.

THIS LIMITED WARRANTY IS EXCLUSIVE AND IN LIEU OF ALL OTHER WARRANTIES WHETHER EXPRESS OR IMPLIED (INCLUDING, WITHOUT LIMITATION, ANY WARRANTY OF MERCHANTABILITY OR FITNESS FOR A PARTICULAR PURPOSE), AND WHETHER ARISING UNDER COURSE OF PERFORMANCE, COURSE OF DEALING OR TRADE USAGE.

This Warranty is exclusive and limited to repair or, at the discretion of Banner Engineering Corp., replacement. **IN NO EVENT SHALL BANNER ENGINEERING CORP. BE LIABLE TO BUYER OR ANY OTHER PERSON OR ENTITY FOR ANY EXTRA COSTS, EXPENSES, LOSSES, LOSS OF PROFITS, OR ANY INCIDENTAL, CONSEQUENTIAL OR SPECIAL DAMAGES RESULTING FROM ANY PRODUCT DEFECT OR FROM THE USE OR INABILITY TO USE THE PRODUCT, WHETHER ARISING IN CONTRACT OR WARRANTY, STATUTE, TORT, STRICT LIABILITY, NEGLIGENCE, OR OTHERWISE.**

Banner Engineering Corp. reserves the right to change, modify or improve the design of the product without assuming any obligations or liabilities relating to any product previously manufactured by Banner Engineering Corp. Any misuse, abuse, or improper application or installation of this product or use of the product for personal protection applications when the product is identified as not intended for such purposes will void the product warranty. Any modifications to this product without prior express approval by Banner Engineering Corp will void the product warranties. All specifications published in this document are subject to change; Banner reserves the right to modify product specifications or update documentation at any time. Specifications and product information in English supersede that which is provided in any other language. For the most recent version of any documentation, refer to: www.bannerengineering.com.

For patent information, see www.bannerengineering.com/patents.

© Banner Engineering Corp. All rights reserved.
www.bannerengineering.com

LinkedIn

X

Facebook

Instagram



© 2026. All rights reserved.