SX Series Safety Laser Scanner Product Manual

Original Instructions
p/n: 208913 Rev. G
24-Mar-26
© Banner Engineering Corp. All rights reserved. www.bannerengineering.com

ПРОМЭЛЕКТРОНИКА/ sales@prom-elec.com

Contents

Chapter 1 About This Document 5
1.1 Important... Read This Before Proceeding! 5
1.2 Use of Warnings and Cautions 5
1.3 EU Declaration of Conformity (DoC) 6

Chapter 2 Product Overview 7
2.1 Models 8
2.1.1 Features 9
2.1.2 Scanner Limitations 9
2.1.3 Product Specification Label 10
2.2 Documents List 10
2.3 Appropriate Applications and Limitations 10
2.3.1 Appropriate Applications 11
2.3.2 Control Reliability: Redundancy and Self-Checking 12
2.3.3 Application Checklist 12
2.3.4 Sample Applications 12
2.3.5 Applications with Master and Remote Scanners 18
2.4 Operating Features 18
2.5 Memory Device for the Master Models 19
2.6 Reference Points (Surface) Monitoring 19
2.7 Passwords 19
2.8 Laser Safety (Class 1) 20
2.8.1 Class 1 Laser Description and Safety Information 20
2.9 Software Overview 21
2.9.1 System Requirements 21
2.9.2 Safety and Warning Zones 22
2.9.3 Monitored Space Display 22
2.10 Security Protocol 23
2.11 General Safety Information 23
2.12 Specifications 23
2.12.1 Dimensions 26

Chapter 3 Install Your Scanner 28
3.1 Safety Zone (SZ) and Warning Zone (WZ) Considerations 28
3.2 Mechanical Installation Considerations 29
3.2.1 Unmonitored Areas 29
3.2.2 Adjacent Scanners 32
3.2.3 Light Interference 33
3.2.4 Highly Reflective Backgrounds 33
3.2.5 Anti-Tamper Function 34
3.2.6 Limited Detection Capability Zone 35
3.2.7 Dust Filtering 35
3.2.8 Anti-interference Coding 36
3.2.9 Master and Remote Configurations 36
3.2.10 Shut-Off Functionality 36
3.3 Positioning Horizontal Safety Zones for Stationary Applications 37
3.4 Minimum Safety (Separation) Distance for Stationary Applications 38
3.5 Minimum Safety (Separation) Distance Formula 38
3.5.1 U.S. Applications 38
3.5.2 European Applications 40
3.6 Reducing or Eliminating Pass-Through Hazards 41
3.7 Reset Switch Location 42
3.8 Supplemental Safeguarding 42
3.9 Mobile Applications 43
3.9.1 Safety Zone Area - Length and Width 44
3.9.2 Minimum Distance D (Safety Zone Length) for Mobile Applications 45
3.9.3 Additional Distance Factors (Z) Specific for Mobile Applications 45
3.10 Mounting System Components 46
3.10.1 Mounting Your Scanner for Mobile Applications 46
3.10.2 Mounting the Scanner Directly to a Surface 47
3.10.3 Mounting the Protection Bracket 48
3.10.4 Mounting the Angle Adjustment Brackets 48
3.10.5 Mounting the Scanner and Adjusting the Angle 48
3.10.6 Adjusting the Roll Angle 49
3.10.7 Scanner Mounting Safety Information 49
3.10.8 Mounting and Unmounting the Removable Memory 50

© Banner Engineering Corp. All rights reserved. www.bannerengineering.com

Chapter 4 Electrical Connections 52
4.1 Routing Cordsets 52
4.2 Initial Electrical Connections 52
4.3 Electrical Connections to the Guarded Machine 53
4.3.1 Connecting the OSSD Outputs 54
4.3.2 Connecting the FSD Interfacing 54
4.3.3 Machine Primary Control Elements and External Device Monitoring 55
4.3.4 SX5 and External Device Monitoring (EDM) 56
4.3.5 Warning (Auxiliary) Output 57
4.3.6 Alarm Output (All Models Except SX5-B) 57
4.3.7 Preparing for System Operation 57
4.4 Wiring Diagrams 57
4.4.1 Machine Interface Connections for the Stand-alone Models 57
4.4.2 Machine Interface Connections for the Master Models (8-pin) 61
4.4.3 Machine Interface Connections for the Master (12-pin) 62
4.4.4 Machine Interface Connections for the Master (17-pin and 17+8-pin) 65
4.4.5 Remote Scanner Connections (8-pin) 67
4.5 Power Supply and PC Connections 68

Chapter 5 Initial Checkout 70
5.1 Apply Initial Power and Configure the SX Scanner System 70
5.2 Verify the Optical Field (Initial Verification) 70
5.3 Perform a Trip Test 71

Chapter 6 Configuration Instructions 74
6.1 System Configuration Settings 74
6.1.1 Response Time and Scan Cycle Setting 74
6.1.2 Automatic or Manual Start/Restart 74
6.2 Muting Functions 75
6.2.1 Mute Devices 76
6.2.2 Mute Device Requirements 76
6.2.3 Examples of Muting Sensors and Switches 76
6.2.4 Mute Enable (ME) 77
6.2.5 Mute Lamp Output 77
6.2.6 Mute Time Limit (Backdoor Timer) 77
6.2.7 Mute-Dependent Override 78
6.2.8 Muting Function T (X) (Bidirectional) or L (Unidirectional) Selection 80
6.3 Encoder Functions 82
6.4 Install the Configuration Software 85
6.5 Software Interface 85
6.5.1 Main Menu 86
6.5.2 Toolbar 86
6.5.3 Status Bar 86
6.5.4 Task Selection 87
6.6 Using the Software 87
6.6.1 Output Configuration 89
6.6.2 Zone Set Configuration 90
6.6.3 Input Configuration 94
6.6.4 Detection Configuration 96
6.6.5 Create or Edit Safety and Warning Zones 98
6.6.6 Special Editing and Display Functions 99
6.6.7 Use Live Monitoring to Assign Safety and Warning Zones 99
6.6.8 Protect a Vertical Area (Reference Points) 100
6.6.9 Select and Visualize Areas on the Graph 100
6.6.10 Connect a Scanner to a PC (Discover the Scanner) 101
6.6.11 Validate and Accept the Configuration 103
6.6.12 Load a Saved Configuration to a Scanner 103
6.6.13 Monitor the Scanner 104
6.6.14 Save a Configuration File 105
6.6.15 Edit an Existing Configuration 105
6.6.16 Wink Function 105
6.7 Print the Safety System Report 106
6.8 Change the Password 106
6.9 Reset the Password 107
6.10 Configure a Static IP Address 107
6.11 Perform a Factory Reset 107

Chapter 7 Operating Instructions 108
7.1 Status Indicators 108
7.2 Display Menu 108

© Banner Engineering Corp. All rights reserved. www.bannerengineering.com

7.3 Resetting the System 109
7.3.1 Reset Signal Function 109

Chapter 8 Checkout Procedures 110
8.1 Periodic Checkout Requirements 110
8.2 Schedule of Checkouts 110
8.3 Perform a Commissioning Checkout 111
8.4 Daily Checkout Procedure 113
8.5 Semi-Annual Checkout Procedure 113

Chapter 9 Troubleshooting 114
9.1 Initial Troubleshooting Steps 114
9.2 Troubleshooting Lockout Conditions 114
9.3 Display Icons 115
9.4 Diagnostic Notes, Warnings, and Errors 115
9.5 Safety 122
9.6 Check for Sources of Electrical and Optical Noise 123

Chapter 10 Accessories 124
10.1 Cordsets 124
10.2 Brackets 125
10.3 Other Accessories 126
10.4 Universal (Input) Safety Modules 126
10.5 Safety Controllers 126
10.6 Interface Modules 126
10.7 Contactors 127

Chapter 11 Product Support and Maintenance 128
11.1 Update the Firmware 128
11.2 Handling the Scanner 129
11.3 Cleaning the Window and Scatter Screen 129
11.4 Window Replacement 129
11.4.1 Replace Your Scanner's Window 131
11.4.2 Calibrate a New Window 134
11.5 Fast Replacement in a System with a Memory Device 135
11.5.1 Fast Replacement of a Memory Device 135
11.5.2 Fast Replacement of the Master Scanner 136
11.5.3 Fast Replacement of a Remote Scanner 136
11.6 Replace Your Scanner without a Memory Device 137
11.7 Convert a SX5-B Configuration to a SX5-B6 Configuration 137
11.8 Repairs, Translations, and Replacement Parts 139
11.9 Contact Us 142
11.10 Banner Engineering Corp Limited Warranty 142

Chapter 12 Standards and Regulations 143
12.1 Applicable U.S. Standards 143
12.2 Applicable European and International Standards 143

Chapter 13 Additional Information (for SX5-B models) 144

Index 146

Glossary 147

© Banner Engineering Corp. All rights reserved. www.bannerengineering.com

Chapter Contents

1.1 Important... Read This Before Proceeding! 5
1.2 Use of Warnings and Cautions 5
1.3 EU Declaration of Conformity (DoC) 6

Chapter 1 About This Document

1.1 Important... Read This Before Proceeding!

It is the responsibility of the machine designer, controls engineer, machine builder, machine operator, and/or maintenance personnel or electrician to apply and maintain this device in full compliance with all applicable regulations and standards. The device can provide the required safeguarding function only if it is properly installed, properly operated, and properly maintained. This manual attempts to provide complete installation, operation, and maintenance instructions. *Reading the manual in its entirety is highly recommended to ensure proper understanding of the operation, installation, and maintenance.* Please direct any questions regarding the application or use of the device to Banner Engineering Corp..

For more information regarding U.S. and international institutions that provide safeguarding application and safeguarding device performance standards, see "Standards and Regulations" on page 143.

WARNING:

- The user is responsible for following these instructions.
- **Failure to follow any of these responsibilities may potentially create a dangerous condition that could result in serious injury or death.**
- Carefully read, understand, and comply with all instructions for this device.
- Perform a risk assessment that includes the specific machine guarding application. Guidance on a compliant methodology can be found in ISO 12100 or ANSI B11.0.
- Determine what safeguarding devices and methods are appropriate per the results of the risk assessment and implement per all applicable local, state, and national codes and regulations. See ISO 13849-1, ANSI B11.19, and/or other appropriate standards.
- Verify that the entire safeguarding system (including input devices, control systems, and output devices) is properly configured and installed, operational, and working as intended for the application.
- Periodically re-verify, as needed, that the entire safeguarding system is working as intended for the application.

1.2 Use of Warnings and Cautions

The precautions and statements used throughout this document are indicated by alert symbols and must be followed for the safe use of the SX Series Safety Laser Scanner. Failure to follow all precautions and alerts may result in unsafe use or operation. The following signal words and alert symbols are defined as follows:

Signal Word and Symbol	Definition
WARNING:	**Warnings** refer to potentially hazardous situations which, if not avoided, could result in serious injury or death.
CAUTION:	**Cautions** refer to potentially hazardous situations which, if not avoided, could result in minor or moderate injury.

© Banner Engineering Corp. All rights reserved.
www.bannerengineering.com

These statements are intended to inform the machine designer and manufacturer, the end user, and maintenance personnel, how to avoid misapplication and effectively apply the SX Series Safety Laser Scanner to meet the various safeguarding application requirements. These individuals are responsible to read and abide by these statements.

1.3 EU Declaration of Conformity (DoC)

Banner Engineering Corp. herewith declares that these products are in conformity with the provisions of the listed directives and all essential health and safety requirements have been met. For the complete DoC, please go to www.bannerengineering.com.

Product	Directive
SX Series Safety Laser Scanner	EU: Machinery Directive 2006/42/EC

Representative in EU: Spiros Lachandidis, Managing Director, **Banner Engineering BV** Park Lane | Culliganlaan 2F bus 3 | 1831 Diegem, BELGIUM

© Banner Engineering Corp. All rights reserved.
www.bannerengineering.com

Chapter Contents

2.1 Models 8
2.2 Documents List 10
2.3 Appropriate Applications and Limitations 10
2.4 Operating Features 18
2.5 Memory Device for the Master Models 19
2.6 Reference Points (Surface) Monitoring 19
2.7 Passwords 19
2.8 Laser Safety (Class 1) 20
2.9 Software Overview 21
2.10 Security Protocol 23
2.11 General Safety Information 23
2.12 Specifications 23

Chapter 2 Product Overview

The SX Series Safety Laser Scanner is an electro-sensitive protective equipment (ESPE). It employs active opto-electronics productive devices responsive to the diffuse reflection of a radiation (AOPDDRs), according to the definition and requirements of international safety standard IEC 61496-3. The optical radiation is a class 1 infrared laser generated within the device.

When the device is properly installed on a machine that presents a risk of personal injury, it provides protection by making the machine revert to a safe condition before a person reaches the hazardous points.

The working principle is that the invisible beam of the laser creates a two-dimensional safety area that must be crossed to reach the dangerous points. In this way the dangerous movement of the machine can be stopped before anyone reaches the hazard point.

The safety area can be horizontal or vertical and by using a Graphic User Interface, its shape can be planned according to the application needs.

The beam is emitted in short interval pulses and they are reflected by objects in the safety area. The device calculates the distance to the object by measuring the time interval between the transmission of the pulse and its reception after being reflected (time-of-flight principles).

The safety area is scanned by a mirror that deflects the light pulses over the 275° area around the device by rotating at a constant speed. In this way, all the opaque objects that have a certain dimension can be detected in the safety area.

Within the sensing range of the scanner, two areas can be monitored simultaneously: one is the Safety Zone, that is used to detect operators or objects entering a hazardous area; the other is the Warning Zone that can be defined with a longer distance than the Safety Zone, allowing a configuration to detect objects that are approaching the Safety Zone. Configurations can also be created with one Safety Zone and two different Warning Zones.

Basic (standard) and cascadable (master and remote) systems are available.

The scanner will only turn its Safety Outputs ON when the Safety Zone is free of obstructions, either automatically or following a manual restart (reset) signal, depending on the operating mode.

When a scanner has the external device monitoring (EDM) function selected in the configuration, it does not require an external controller. This function ensures the fault detection capability required by U.S. Control Reliability and ISO 13849-1 Category 3 and PL d for controlling final switching devices (FSDs) or Machine Primary Control Elements (MPCEs).

When a scanner does not have the EDM function selected (or is not an option), it should be connected to a self-checking safety module, safety controller, or safety PLC/PES that conforms to the level of performance required by the risk assessment. Examples include UM-FA-9A/-11A safety modules, SC10-2roe or XS/SC26-2 safety controller for applications requiring Control Reliability and/or ISO 13849-1 Category 3 or PL d.

© Banner Engineering Corp. All rights reserved.

Figure 1. The maximum Safety Zone (5.5 m) and Warning Zone (40 m)

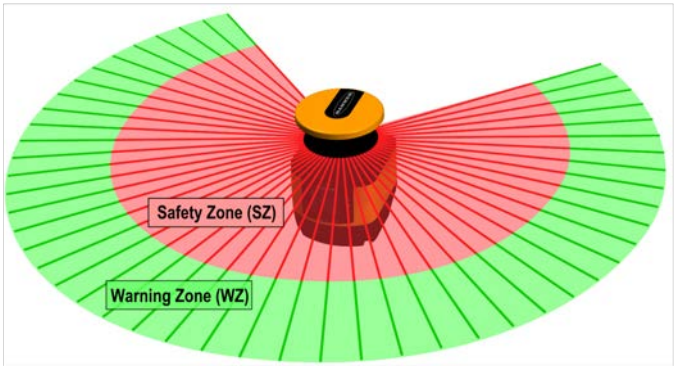

Key	Description	Distance
SZ	Maximum Safety Zone range	5.5 meters
WZ	Maximum Warning Zone range	40 meters

2.1 Models

A SX Series Safety Laser Scanner System refers to the laser scanner, cordsets (ordered separately), and mounting hardware (ordered separately). Interfacing solutions include safety modules, controllers, and muting modules.

Model	Description	Max Safety Range (m)	Connections (pins)
SX5-B*	SX5 Safety Laser Scanner, stand-alone model	5.5	8
SX5-B6*	SX5 Safety Laser Scanner, updated stand-alone model	5.5	8
SX5-ME70	SX5 Safety Laser Scanner, master model with encoder inputs	5.5	17 + 8
SX5-M70	SX5 Safety Laser Scanner, master model	5.5	17 + 8
SX5-M10	SX5 Safety Laser Scanner, master model	5.5	12 or 8
SX5-R	SX5 Safety Laser Scanner, remote model	5.5	8

* The **SX5-B6** is an updated standalone model with more features than the **SX5-B**. The **SX5-B** is a legacy product that is no longer available for ordering.

The following items, ordered separately from the scanner, are required to make a complete system.

Qty	Description
1	Mounting hardware (If desired, can mount directly to a surface)
1	Machine interface cable
1	M12 Ethernet cable

IMPORTANT: Configuration software is required. The software is available at www.bannerengineering.com/SX5.

© Banner Engineering Corp. All rights reserved.
www.bannerengineering.com

2.1.1 Features

Figure 2. Features



1. Display
2. LED indicators
3. Stand-alone model only: M12 Ethernet connector cover (connectors vary depending on the model)
4. Keypad
5. Scanner window
6. Scatter screen

2.1.2 Scanner Limitations

Environmental limitations — The SX Series Safety Laser Scanner is not suitable for use outdoors or under conditions with significant temperature fluctuations. Humidity, condensation, and other weather influences can impair the safety function.

- Use the SX only in environmentally controlled areas.
- Observe all technical data and ambient conditions.

For industrial use only — The SX can cause radio interference and is not suitable for use in residential areas. Only use the Scanner in industrial environments.

Not for use on vehicles with combustion engines — The SX is not suitable for use on vehicles with combustion engines, because alternators or ignition systems can cause EMC disturbances.

Make no modifications to the Scanner — The SX may not be modified, or the Protective function of the Scanner can no longer be guaranteed. Where changes are made to the Scanner, all guarantee claims against the manufacturer of the Scanner shall no longer apply.

Service life TM in accordance with DIN ISO 13849 — The SX's PL and PFHd specifications refer to the TM service life of 20 years. Repairs or replacement of wear and tear parts do not extend the service life.

Protective function limits — The SX does not protect against (including, but not limited to):

- Parts that are ejected from a machine
- Splashing/spraying liquids
- Gases and vapors
- Radiation

Vapors, smoke, dust, particles — Vapors, smoke, dust and all particles visible in the air can cause the machine to switch OFF unintentionally. Do not use the SX in environments in which heavy vapors, smoke, dust or other visible particles are present.

Stray light limitations — Light sources (including infrared, fluorescent, and strobe lights) can impair reliability. Ensure that no interfering light sources are present within the SX detection plane.

- Prevent reflective surfaces at beam level.
- Where applicable, take additional separation (safety) distances into account.
- Ensure that there are no other photoelectric sources within the SX detection plane that can impair performance.

Monitoring through a window restriction — Do not use the SX to monitor an area (scan) through any window or transparent materials. Doing so can result in false detection that will cause nuisance machine stoppages.

© Banner Engineering Corp. All rights reserved.
www.bannerengineering.com

2.1.3 Product Specification Label

Figure 3. Product Identification Plate



2.2 Documents List

The information for applying and configuring the SX Series Safety Laser Scanner is covered in several documents to simplify access to information.

The current version of the configuration software program and all PDF documents can be downloaded from the Banner website www.bannerengineering.com. Print out the relevant instructions to simplify reading and handling the documents.

Document Title	Document Content	Source
SX Series Safety Laser Scanner Datasheet	General product information and diagnostic reference	Included with the product in print and available for download (p/n 208910)
SX5-B Safety Laser Scanner Datasheet		Included with the product in print and available for download (p/n 221532)
Banner SX Scanner software	Configuration and diagnostic software	Download Banner SX Scanner software from www.bannerengineering.com.
SX Series Safety Laser Scanner Instruction Manual	Operation capabilities, functions, and applications, for the machine designer, installer, and end-user	Download document part number 208913
SX Series Safety Laser Scanner Checkout Procedures	Instructions for daily and semi-annual checkouts of Scanner installation	Download document part numbers 208911 (Semi-Annual) and 208912 (Daily). Print as needed and post near the guarded equipment.

2.3 Appropriate Applications and Limitations

Read this Section Carefully Before Installing the System— If all mounting, installation, interfacing, and checkout procedures are not followed properly, the Banner device cannot provide the protection for which it was designed. The user is responsible for ensuring that all local, state, and national laws, rules, codes, or regulations relating to the installation and use of this control system in any particular application are satisfied. Ensure that all legal requirements have been met and that all technical installation and maintenance instructions contained in this manual are followed.

The user has the sole responsibility to ensure that this Banner device is installed and interfaced to the guarded machine by Qualified Persons[1], in accordance with this manual and applicable safety regulations. Failure to follow these instructions could result in serious injury or death.

The Banner SX is intended for safeguarding applications as determined by a risk assessment. It is the user's responsibility to verify whether the safeguarding is appropriate for the application and is installed, as instructed by this manual, by a Qualified Person.

[1] A person who, by possession of a recognized degree or certificate of professional training, or who, by extensive knowledge, training and experience, has successfully demonstrated the ability to solve problems relating to the subject matter and work.

© Banner Engineering Corp. All rights reserved.
www.bannerengineering.com

The SX's ability to perform its safeguarding function depends upon the appropriateness of the application and upon its proper mechanical and electrical installation and interfacing to the guarded machine. **If all mounting, installation, interfacing, and checkout procedures are not followed properly, the SX cannot provide the protection for which it was designed**.

WARNING:
- **Access and Perimeter Safeguard Installation**
- **Failure to follow these instructions could result in serious injury or death.**
- If an SX Series Safety Laser Scanner is installed for use as an access or perimeter guard (where a pass-through hazard may exist, see "Reducing or Eliminating Pass-Through Hazards" on page 41), configure the SX for Manual Start/Restart (Latch Output). The dangerous machine motion can be initiated by normal means only after the safeguarded area is clear of individuals and the SX Series Safety Laser Scanner has been manually reset.

2.3.1 Appropriate Applications

The user has the sole responsibility to ensure that the SX Series Safety Laser Scanner is appropriate for the application and is installed and interfaced by Qualified Persons in accordance with this manual and applicable safety regulations.

The SX Series Safety Laser Scanner must be integrated into the machine's control system in such a way that an activation of the safety function safely stops or interrupts the dangerous process before a person can be endangered.

This SX Series Safety Laser Scanner is typically used in access guarding and perimeter guarding applications. Some potential applications are:
- Automated production equipment
- Robotic work cells
- Assembly and packaging machines
- Automated guided vehicles
- Lean manufacturing systems
- Safety mat replacements

Do not use the SX Series Safety Laser Scanner:
- With any machine that can not be stopped immediately after a stop signal is issued, such as single-stroke (full revolution) clutched machinery
- With any machine with inadequate or inconsistent machine response time and stopping performance
- With any machine that ejects materials or component parts through the safety zone
- In any environment that is likely to adversely affect photoelectric sensing efficiency. For example, corrosive chemicals or fluids or severe levels of smoke or dust, if not controlled, may degrade sensing efficiency
- As a tripping device to initiate or reinitiate machine motion (PSDI applications), unless the machine and its control system fully comply with the relevant standard or regulation (see OSHA 29CFR1910.217, NFPA 79, ANSI B11.19, ISO 12100, IEC 60204-1, IEC 61496-1, or other appropriate standard)

WARNING:
- Proper Use
- Failure to follow all instructions and warnings could lead to serious bodily injury or death.
- Only use the SX Series Safety Laser Scanner on machinery that can be stopped immediately after a stop signal is issued at any point in the machine's stroke or cycle. Under no circumstances may the Scanner be used on full-revolution clutched machinery or in unsuitable applications as those listed.
- Allow only Qualified Persons to install and maintain the SX Series Safety Laser Scanner. Perform the Shift/Daily checkout procedure at every power-up, shift change, and machine setup. Refer to the instruction manuals and other reference materials (located in the Help menu) for all installation details, wiring diagrams, operating instructions, shift/daily/periodic checkout procedures, and warnings.
- If there is any doubt about whether or not your machinery is compatible with the SX Series Safety Laser Scanner, contact Banner's Application Engineers.

© Banner Engineering Corp. All rights reserved.
www.bannerengineering.com

2.3.2 Control Reliability: Redundancy and Self-Checking

Redundancy requires that the SX Series Safety Laser Scanner circuit components be backed up to the extent that, if the failure of a single component will prevent effective machine stopping action when needed, that component must have a redundant counterpart that will perform the same function. The SX Series Safety Laser Scanner is designed with redundant microprocessors.

Maintain redundancy whenever the SX Series Safety Laser Scanner is in operation. Because a redundant system is no longer redundant after a component has failed, the SX Series Safety Laser Scanner is designed to monitor itself continuously. A component failure detected by or within the self-checking system sends a stop signal to the guarded machine and puts the SX Series Safety Laser Scanner into a Lockout condition.

A recovery from this type of Lockout condition requires:

- Replacing the failed device (to restore redundancy, only performed by Banner Engineering Corp.)
- Performing the appropriate reset procedure

Use the Diagnostic Display to diagnose causes of a lockout condition. See "Troubleshooting" on page 114.

2.3.3 Application Checklist

The SX Series Safety Laser Scanner can provide a protective function only when its settings and connections (software configuration, Safety and Warning Zone dimensions, electrical interfacing, mounting, environmental conditions, supplemental safeguarding, etc.) are coordinated with its application. The checklist items below and the following application examples are intended to give additional guidance in applying the SX Series Safety Laser Scanner.

The following items are provided to assist in creating a checklist or to be included in a risk assessment for the application of the SX. Additional items may be required, depending on the application.

- Review this instruction manual
- Identify the appropriate application (required resolution, field orientation, etc):
  - Expert for horizontal applications
  - Vertical for vertical applications
- Determine the area to be safeguarded and the SX's installation location and means.
- Determine whether the SX requires protection from mechanical damage.
- Ensure that the environmental conditions do not exceed the SX specifications.
- Determine the size and coverage of the Safety Zone and Warning Zone (if used) depending on:
  - Physical location of the SX installation,
  - The minimum safety distance or the stopping distance of the mobile vehicle
  - The height (H) of the Protective Field (horizontal applications)
  - Other factors that may require an increased minimum safety distance (e.g. "shadowing", adjacent SX, retro-reflective surfaces, brake performance degradation)
- **IMPORTANT:** It is recommended to visibly mark the Protective/Warning Field boundaries, if possible.
- Assess the possibility of avoiding detection by the SX by climbing/stepping over, crawling under, moving around the protection field(s), either at the perimeter of the fields or in unprotected areas caused by the shadow effect.
- Determine whether additional/supplement safeguarding is required.
- Determine the proper startup, start/restart (manual/automatic reset), and other safety-relevant parameters. If the manual restart is used, determine the position for the reset button.
- Determine whether Zone Set switchover is required and identify the conditions for its use.
- Determine whether the Reference Point function is required (at least three (3) reference points must be defined on fixed surface(s)).
- Determine the method and means of electrical interfacing dependent on the level of risk determined by the risk assessment (e.g., OSHA/ANSI control reliability or ISO 13849-1 category 3 PLd).

2.3.4 Sample Applications

The SX Series Safety Laser Scanner is used to detect people who are approaching a hazardous area, before reaching it, to prevent hazardous circumstance (i.e. mechanical movement) that may cause an accident.

The protective detection is done by defining a safety area (the red zone in the figures), whose shape and dimensions must be designed according to the risk assessment of the machine. The user must consider the position of the hazardous points, the shape of the machine and of the environment that surrounds it, and the time needed to stop the dangerous movement.

© Banner Engineering Corp. All rights reserved.
www.bannerengineering.com

To better ensure people's safety, it is possible to define a warning area (the green zone in the figures): if a person or an object is approaching too close to the safety area, the safety laser scanner can trigger warning devices. This warning area cannot be used for safety purposes.

The following application examples should be considered just as references for instructional purposes.

Stationary Area Guarding (Horizontal Danger Zone Guarding)

Area Guarding uses a horizontal sensing field (i.e., Safety or Warning Zones) to continually sense an individual within a safeguarded area. Area Guarding can reduce or eliminate the possibility of a pass-through hazard that could result in an individual being exposed to unexpected machine startup or motion.

As an individual approaches, the Warning Zone (the green area) can illuminate a warning beacon or sound an alarm that the Safety Zone (the red area) is about to be entered. In conjunction with markings on the floor, the use of a Warning Zone can eliminate intermittent stopping due to individuals being unaware of the safeguarded area. When the Safety Zone is encroached upon, a stop is issued and the hazard is brought to a safe state.

Figure 4. Horizontal stationary area guarding

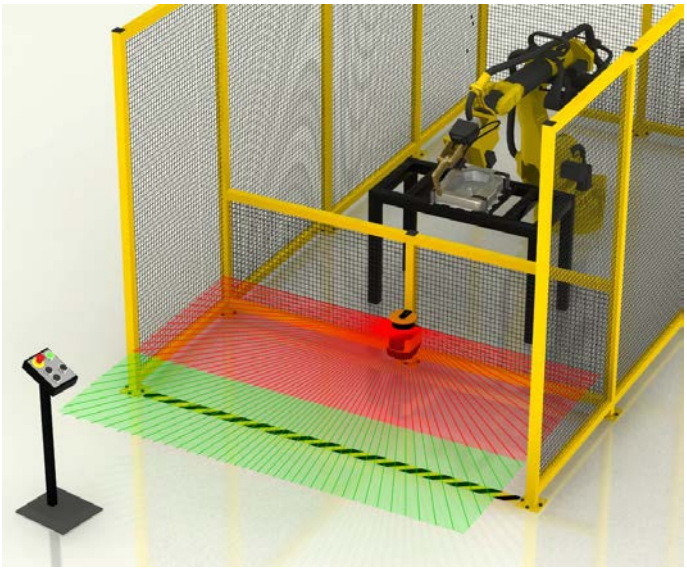

Typical considerations for horizontal stationary area guarding:

- In this example, the SX is mounted in the center of the operator work station to maximize the available size of the Safety and Warning Zones. The SX is mounted directly to the cell's perimeter guarding fencing 300 mm above the floor to prevent crawling under the Safety Zone.
- In this example, physical damage is not expected because the fencing provides adequate protection. If interference with the operator is expected, the Scanner can be recessed into the fencing to minimize exposure.
- The typical manufacturing setting is well within the SX's environmental ratings.
- The size and coverage of the Safety Zone must ensure that the hazard cannot be accessed by moving (reaching) around, under, or over the Safety Zone. Access to the hazard is prevented by the fencing along the side of the Safety Zone, which minimizes the required floor space.
- For this example, assume a robot stopping time of 100 ms, SX response time of 62 ms, the response time of a safety interfacing device is 25 ms (UM-FA-9A safety module). Because an individual can reach over the detection plane by bending at the waist, the **Dpf** adder is equal to 1200 mm (U.S. formula) and the Measurement Tolerance Factor (Z_{SM}) must be accounted for. This gives a safety distance of:**Ds = 1600 mm/s × (0.1s + 0.062s + 0.025s) + 1200 mm + 150 mm = 1649 mm (64.9 in)**. In other words, the leading (outside) edge of the Safety Zone must be 1649 mm from the nearest hazard.
- It is recommended to mark the boundary of the Safety/Warning Zone on the floor.
- This example has no factors that would require an increase in the safety distance.
- There is no possibility of easily stepping, climbing or otherwise avoiding detection.
- Because there is no pass-through hazard, the SX can be configured for "automatic start/restart (reset)". However, the machine control circuitry must be designed so that one or more initiation devices must be engaged (e.g. a conscious act is required) to start the machine.
- Further, any initiation devices (or reset switches) must comply with the Reset Switch Location.
- For the purpose of this example, the UM-FA-9A Universal Input Safety Module was used and interfaced in a control reliable (category 3 or 4) method as described in the wiring diagram.

© Banner Engineering Corp. All rights reserved.

Stationary Area Guarding with Zone Set Switchover

An Area Guarding application can use the Zone Set Switchover function to automatically allow access to one area while simultaneously guarding another hazardous area. This can improve machine cycle efficiency by allowing the operator to remove/place parts while the operation is in a different area, for example.

The robot position (i.e., the location of the hazard) is monitored to identify when no hazard exists at one work station, at which time the Zone Sets are switched. The Zone Set Switchover function is much like a muting application for a safety light screen.

Figure 5. Sample application with Zone Set Switchover

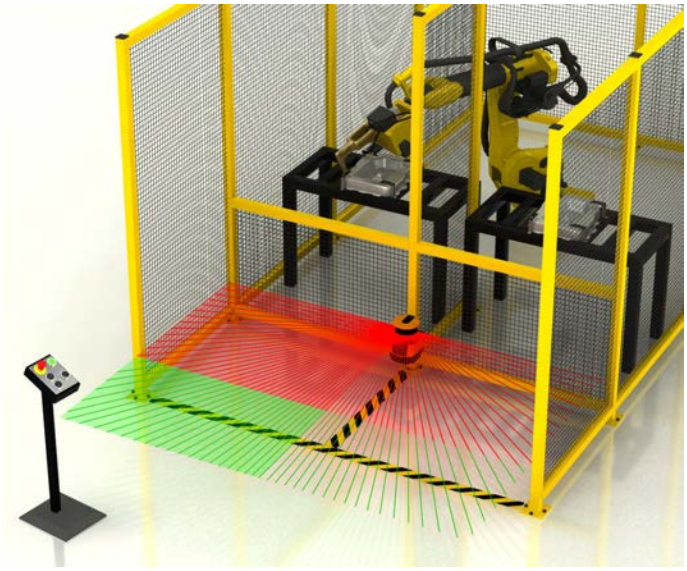

In addition to the typical considerations for horizontal stationary area guarding, for this example:

- Ensure that no individual is exposed to a hazard while employing the Zone Set switching function. The risk assessment should determine the applicability of this function, means of selecting Zone Sets in respect to failure modes, and whether supplemental safeguarding is required.
- In higher risk applications that require control reliability (category 3 or 4) interfacing, it is highly recommended to use redundant sensors or switches to initiate or enable a Zone Set change.
- If two Zone Sets are used the Warning Auxiliary output can be used in conjunction with the Warning Zones. If three Safety Zones are desired (right, left, entire area) then the Warning output pin is required for selecting the Zone Set (Safety Zone).

Stationary Area Guarding with Multiple Scanners

Area Guarding is frequently used in conjunction with other safeguards, such as interlocked gates on fencing or vertically positioned safety light screens/grids (for example, perimeter guarding). The purpose of the safeguarding located at the perimeter of the work cell is primarily to detect entry into the hazardous area, while the area guarding (for example, the SX) is responsible for preventing machine restart or other machine hazards while the individual remains within the work cell.

In such applications, it is important not to have any voids or unmonitored areas (dead spaces) in the detection capability of the Area Guarding system. The SX can be configured for irregularly shaped protection fields to accomplish this.

> **IMPORTANT:** Area Guarding and Perimeter Guarding should not be used in place of Lockout/Tagout procedures.

© Banner Engineering Corp. All rights reserved.
www.bannerengineering.com

Figure 6. Stationary area guarding with multiple scanners

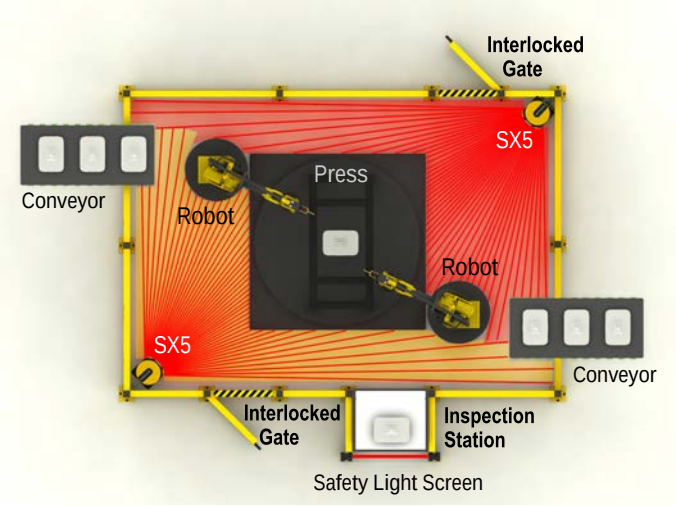

In addition to the typical considerations for horizontal stationary area guarding listed in example #1:

- Install multiple SX with a vertical offset height of 100 mm (or more) or use physical shielding to prevent one SX from interfering with another SX.
- Be aware of the effect of needle- and cone-shaped fields and eliminate areas of unreliable detection.
- Eliminate the "shadow effect" and/or use additional safeguarding.
- Configure the SX for start/restart interlock (manual reset) to ensure that the Scanner does not turn ON its safety outputs if an individual is momentarily undetected (e.g., climbs up onto the machinery above the plane of the Protective Field).
- Configure any perimeter guarding systems (e.g., an interlocked gate or safety light screen) for a manual reset; any reset switches must comply with the Reset Switch Location Section.

Mobile Area Guarding on Transfer Carts/Trolleys and Automated Guided Vehicles (AGVs)

On mobile applications, such as transfer carts, the SX monitors the area directly ahead of the cart using both the Warning and the Safety Zones. If something is detected within the Warning Zone (the green area), the alarm output signals the vehicle logic to slow the vehicle and sound a horn (or other awareness device). The SX stops the vehicle when something is detected within the Safety Zone (the red area). If the speed increases or decreases, alternate Zone Sets can be used to adjust for varying stopping distances.

Figure 7. Mobile area guarding on AGVs

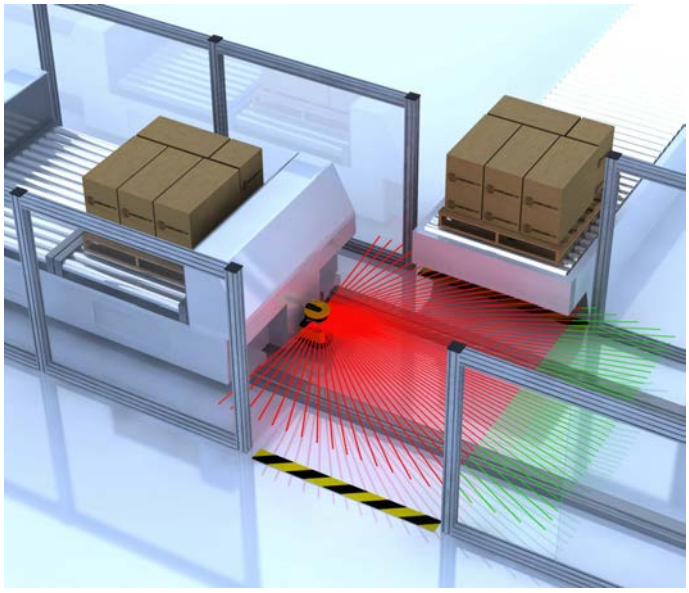

Typical considerations for mobile vehicle guarding (horizontal fields):

© Banner Engineering Corp. All rights reserved.
www.bannerengineering.com

- In this example, the mobile vehicle is a transfer cart that travels in two directions along a pair of rails. Each direction of travel is guarded by separate, individually configured Scanners on either end of the vehicle, mounted 150 mm (5.9 inch) above the plane of the floor (not the rails). The plane of the Safety Zone should not exceed 200 mm (7.9 in) above the floor.
- In this example, physical damage is not expected because the path of travel is restricted.
- The typical manufacturing setting is well within the SX's environmental ratings.
- Safety Zone Length (Minimum Distance D): For this example, assume a maximum vehicle speed of 1200 mm/s (48 in/s), a breaking distance of 900 mm (35 in), SX response time of 122 ms (4 scans), the response time of a vehicle drive and safety interfacing 100 ms, which results in an overall stopping distance of 1166 mm (46 in). D_{SD} = [1200 mm/s × (0.1s + 0.122s)] + 900 mm. This value is added to the Additional Distance Factors (Z) to determine the Safety Zone length , which for this example are:
  - Z_{SM} = 150 mm (5.9 in)
  - Z_{refl} = 0 — The possibility of retro-reflectors located within the scanning plane of the Protective Field can be excluded.
  - Z_F = 100 mm (4 in) — To the ground clearance of the transfer cart's sides is 60 mm (2.4") and the wheels are not accessible.
  - Z_A = 500 mm (20 in) — The possibility of crushing/trapping hazard against the overhanging conveyor and the transfer cart is an application specific addition for this example.
  - The total Safety Zone length (Minimum Distance) from the SX to the leading edge of the Safety Zone is 1916 mm (75.4 in).
- Safety Zone Width (Additional Side Distance Z): The Z factors to determine the Safety Zone width are primarily the same as above (Z_{SM} = 150 mm, Z_{refl} = 0, Z_F = 100 mm), but the application specific adder, $Z_{A(SIDE)}$, is now used to account for the entire area to the sides the cart and under the overhang of the conveyor. This distance is 300 mm (12 in); Z_{SM} + Z_F = 250 mm (9.8 in) , thus Z_A must equal 50 mm (2 in) to ensure the entire area to the sides of the cart are monitored. The total width of the Safety Zone for this example is 1666 mm (66 in), which is the width of cart of 1066 mm (42 in) plus the value of the two 300 mm side distances.
- A 190° Safety/Warning Zone should be used to minimize any unmonitored area at the SX's sides.
- The vehicle's maximum speed should be identified in the SX's configuration. In this example the maximum speed is 1200 mm/s.
- The Warning Zone is used to slow the transfer cart and sound a horn if an object is detected.
- The design of the transfer cart ensures that there are no protruding loads (e.g., pallets) that could become a hazard.
- The fencing (supplemental safeguarding) along the path of the transfer cart reduces the risk of an individual stepping directly in front of the cart; this allows the Safety Zone width to be minimized. The fencing also reduces, but does not eliminate, the possibility of crushing/trapping hazards between the transfer cart and the conveyor because the individual is detected by the leading edge of the Safety Zone.
- In this example, the movement of the transfer cart is controlled primarily by on-board logic that is safety-rated. This allows the movement to begin after the material control system (conveyor logic) commands the cart to a specific location. Automatic restart function must incorporate a two-second delay after the Safety Zone becomes clear (per ISO 3691-4).

The on-board logic of the transfer cart that controls beginning and stopping motion and the means of electrical interfacing must be evaluated during the risk assessment to meet the required level of safety performance (e.g., control reliability or category 3 or 4).

Vertical Guarding with Reference Point Monitoring

This example application uses two SXs with Safety Zone Switchover to safeguard a pallet load/unload station. The two Safety Zones per SX are enabled (the red lines) and disabled (pink shaded areas) as pallets are loaded/unloaded and as they enter/exit the work cell at the rear of the station.

The SX's Area Switch inputs identify the position of a pallet to determine which Safety Zone to disable. The Reference Points (blue points) ensure that the Safety Zones are in the proper position.

© Banner Engineering Corp. All rights reserved.

Figure 8. Vertical guarding with reference contour monitoring

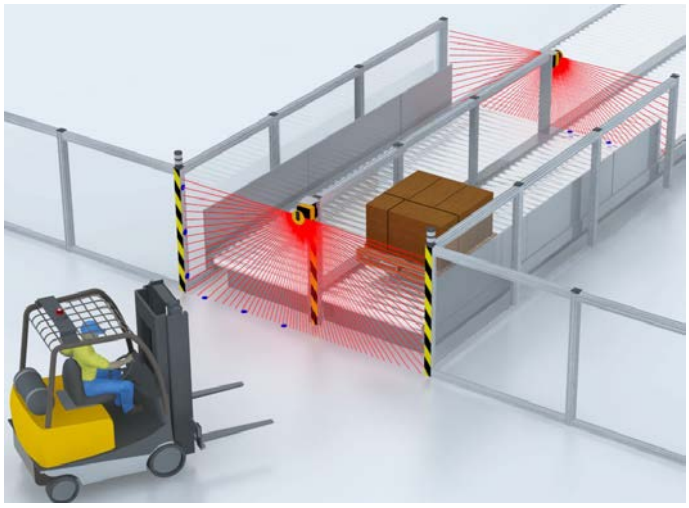

Typical considerations for vertical guarding:

- In the example shown, the objective is to prevent an individual from entering an area; detecting the body (torso) is required.
- In this example, physical damage is not expected because the SX is mounted above and away from the probable path of the forklift. If an impact is possible, a mechanical guard/shroud can be added to protect the SX without blocking the Safety Zones.
- The typical manufacturing setting is well within the SX's environmental ratings.
- The size and coverage of the Safety Zone must ensure that unrestricted or accidental entry to the work cell is prevented. Two SXs are used to create four Safety Zones to cover each end of the pallet load/unload station (e.g. left side SZ, right side SZ, and both sides SZ). When no pallets are at the station, the front SX has a Safety Zone that covers both sides; the rear SX can be muted to allow pallets to be fed into the station (such as pallets exiting the cell). As pallets are loaded, sensors monitoring the pallet position switch the Zone Sets to "turn off" the front Scanner's right side and "turn on" (and unmute) the rear SX's Safety Zone for that side (as shown). This allows the forklift to pick up the pallet and remove it.
- When the front Safety Zone is inactive, the pallet must completely block the opening to prevent access. When the pallet is removed, that Safety Zone must immediately be re-activated.
- The use of the Reference Points is required for vertical guarding applications (e.g. the blue points).
- In this example, no factors would require an increase in the safety distance.
- For this example, assume a machine stopping time of 200 ms, SX response time of 62 ms; safety interfacing device (UM-FA-9A safety module) response time is 25 ms. The resolution can be either 40 or 70 mm, since only body detection 70mm can be selected, the **Dpf** adder is equal to 900 mm (U.S. formula). This gives a safety distance of: **Ds = 1600 mm/s x (0.2s + 0.062s + 0.025s) + 900 mm = 1359 mm (53.5 in).** In other words, the plane of the rear Protective Field must be no closer than 1359 mm (53.5 in) from the nearest hazard (assuming no hazard inside the load station).
- Configure the SX for start/restart interlock (manual reset) to ensure that if an individual interrupts an active Safety Zone while attempting to enter the guarded area that the SX's OSSD safety outputs remain OFF until manually reset after the individual exits the cell.
- For the purpose of this example, the UM-FA-9A Universal Input Safety Module was used and interfaced in a control reliable (category 3 or 4) method as described by Section 3 and Figure 3-19.

Mobile Area Guarding with Side Vertical Guarding

Vertically guarding the sides of transfer carts, material-handling trolleys, and Automated Guided Vehicles (AGVs) prevents contact with objects that may have overrun the stop position of a conveyor, which could result in damage to the mobile vehicle and the conveyor. This type of guarding can also be used for situations with a crushing/trapping hazard, for example, a distance less than 500 mm (20 in) between the sides of the SX and a physical structure.

Two SXs are positioned to create horizontal Safety Zones, to prevent running over objects or individuals in the path of the vehicle. A second pair of vertically mounted SXs is positioned to detect objects at or above the horizontal plane of the SXs that are looking ahead of, and behind the vehicle. In this configuration, the "leading edge" of the Safety Zone is now provided by the vertical edges on the sides of the SX. These edges will detect the torso of an individual; 70 mm resolution is typically selected.

© Banner Engineering Corp. All rights reserved.
www.bannerengineering.com

Figure 9. Mobile area guarding with side vertical guarding

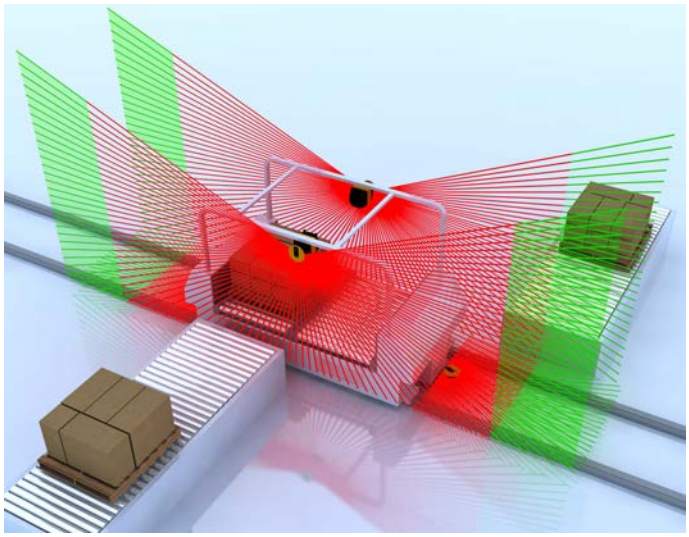

In addition to the typical considerations for mobile area guarding (see "Mobile Area Guarding on Transfer Carts/Trolleys and Automated Guided Vehicles (AGVs)" on page 15):

- Select 70 mm resolution for torso detection.
- Set the leading edge of the vertical Safety Zone no shorter (smaller) than the corresponding horizontal Safety Zone (assuming that the response times and safety distances are equal).
- Position the vertical Safety Zones at a slight angle so that the lower Safety Zone edges protrude over the vehicle width by the amount of the additional distances Z_{SM}, Z_F, Z_{REFL}, and Z_A when required (see "Vertical Guarding with Reference Point Monitoring" on page 16).
- The configuration of reference points, as with other vertical guarding applications, is not required, because the approach of the individual is detected by the edge of the Safety Zone and not the plane. As with the horizontal Safety Zones, the vertical Safety Zone must be checked (verified) on a periodic basis.
- Minimize crushing/trapping hazards by using supplemental safeguarding, such as by preventing access (e.g., fencing) or by causing the individual to be detected by the leading edge of the horizontal Safety Zone.

2.3.5 Applications with Master and Remote Scanners

In applications where you need to monitor several zones that are not visible from just one point, use more than one scanner. However, there may be just one safety function, for example dangerous movement that must be stopped when something is detected inside the area.

The SX Laser Scanner can effectively solve this situation. Up to four scanners can be easily connected to each other through an Ethernet-based safe communications bus, working as a single system (cascading the scanners).

Only the Master Unit receives power, has inputs and outputs onboard, and must be connected to a PC to configure the entire system.

The Remote Units (cascaded units) are connected to the Master with a single cable that also provides them with power. The synchronization of up to four (4) scanners is an integrated function. There is no need for extra external control units.

2.4 Operating Features

The Banner SX Series Safety Laser Scanner models described in this instruction manual feature several functions. Configuring some of these functions must be accomplished by a Qualified Person to ensure that personnel who are exposed to potentially dangerous situations are adequately protected. Features include:

- Selecting automatic or manual start/restart
- Configuring the response time
- Setting the Warning and Safety Zones
- Defining a Warning output
- Configuring a muting evolution
- Cascading up to four scanners in one chain
- Interfacing encoder inputs in AGV applications for assistance in selecting Zone Sets

© Banner Engineering Corp. All rights reserved.
www.bannerengineering.com

For more information, see "Configuration Instructions" on page 74.

2.5 Memory Device for the Master Models

The memory device is a removable memory box included on all master scanner models (not on remote or stand-alone models). The memory device stores the scanner configuration for an individual scanner or a chain of scanners.

The memory device saves the configuration when the PC transfers the operational parameters to the scanner. This simplifies the replacement of a faulting or damaged scanner. When the original scanner is replaced and the memory device is connected to a new scanner, it is very easy to install the configuration on that new scanner (no PC required).

To replace your scanner and/or memory devices, refer to "Fast Replacement of the Master Scanner" on page 136.

The memory device is also the point of cable connections for a master unit. For the cable connection process, refer to "Mounting and Unmounting the Removable Memory" on page 50.

A memory device is supplied with each master scanner.

2.6 Reference Points (Surface) Monitoring

The reference points (surface) monitoring function prevents unintentional misalignment and deliberate manipulation of the SX.

If the configuration contains reference points, the SX monitors both the Safety Zone (for intrusions) and the reference points (for position). If the distance between the scanner and the reference surface (point) changes from the configuration (greater than the assigned tolerance), the SX detects the change and switches the OSSDs to OFF.

The design of the installation and the risk assessment must identify the need and use of the reference points (surface) monitoring function. In horizontal applications, this function ensures that the safeguarded area does not change due to the SX moving or changing position because of an impact, vibration, or poor maintenance practices. In a vertical application, the position of the Safety Zone has a critical effect on the separation (safety) distance. If there is an angular movement of the SX that causes the Safety Zone to be positioned closer to the hazard, an individual could access the hazard before the machine can stop.

With a vertical Safety Zone (angle of approach greater than ±30°), it is required that at least three (3) reference points be assigned. The reference points must be assigned on a surface that will be present but do not have to be at the edge of the Safety Zone. The surface must be within the safety range for the configured resolution of the scanner. The reference points should be on at least two sides, areas, or surfaces. The angle between individual reference points must be at least 5 degrees.

For more information on how to create a Safety Zone and use reference points, see "Safety Zone Area - Length and Width" on page 44.

NOTE:

- **Reference Points**
- Failure to follow these recommendations can potentially create a dangerous situation that may lead to serious injury or death.
- The design of the installation and the risk assessment must identify the need and use of the reference points (surface) monitoring function. A change in the position or mounting of the SX can result in gaps/unmonitored areas and an incorrect (too small) safety distance (minimum distance). If is recommended that Reference Point Monitoring be used for all stationary applications that have surfaces that can be monitored.

2.7 Passwords

Improperly set parameters on the SX can cause serious accidents. The configuration of the SX is therefore protected by passwords.

Banner SX Scanner software is not password protected. Users can create and save (to the PC) a configuration file without entering a password. A password is required to upload a configuration to a SX.

© Banner Engineering Corp. All rights reserved.
www.bannerengineering.com

Ensure that the passwords are secured by the Qualified Person. The default password is `admin`. Call Banner Engineering technical support if a password is unknown.

The people responsible for the machine's safety must ensure that the appropriately Qualified Person can properly perform the tests and work on the machine and the SX in accordance with their intended use.

2.8 Laser Safety (Class 1)

The SX Series Safety Laser Scanner has a Class 1 laser.

Figure 10. Laser safety label



2.8.1 Class 1 Laser Description and Safety Information



Laser light. Do not stare into the beam.

Complies with 21 CFR 1040.10 and 1040.11 except for deviations pursuant to Laser Notice No. 56, dated May 8, 2019.

CLASS 1
LASER PRODUCT

CAUTION:

- **Never stare directly into the sensor lens.**
- Laser light can damage your eyes.
- Avoid placing any mirror-like object in the beam. Never use a mirror as a retroreflective target.

CAUTION:

- **Return defective units to the manufacturer.**
- Use of controls or adjustments or performance of procedures other than those specified herein may result in hazardous radiation exposure.
- Do not attempt to disassemble this sensor for repair. A defective unit must be returned to the manufacturer.

CAUTION:

- **Ne regardez jamais directement la lentille du capteur.**
- La lumière laser peut endommager la vision.
- Évitez de placer un objet réfléchissant (de type miroir) dans la trajectoire du faisceau. N'utilisez jamais de miroir comme cible rétro-réfléchissante.

© Banner Engineering Corp. All rights reserved.
www.bannerengineering.com

CAUTION:
- **Tout dispositif défectueux doit être renvoyé au fabricant.**
- L'utilisation de commandes, de réglages ou de procédures autres que celles décrites dans le présent document peut entraîner une exposition dangereuse aux radiations.
- N'essayez pas de démonter ce capteur pour le réparer. Tout dispositif défectueux doit être renvoyé au fabricant.

Class 1 lasers are lasers that are safe under reasonably foreseeable conditions of operation, including the use of optical instruments for intrabeam viewing.

Complies with IEC 60825-1:2014 and EN 60825-1:2014+A11:2021.

For safe laser use:
- Do not stare at the laser.
- Do not point the laser at a person’s eye.
- Mount open laser beam paths either above or below eye level, where practical.
- Terminate the beam emitted by the laser product at the end of its useful path.

Class 1 Laser Characteristics

Output power: 8 mW
Laser wavelength: 905 nm
Pulse duration: 3 nsec

2.9 Software Overview

Use the configuration software to establish operational settings for the SX and to display measurement and system information produced by the SX. Communication between the PC and the SX is via an Ethernet network.

The scanner ships from the factory unconfigured. The unit must be configured for each application.

The configuration settings are created by a trained and Qualified Person who understands the SX instruction materials. These settings are saved in an .xml configuration file and includes all the information that the SX requires for its intended operation. An SX's configuration file includes the following data:
- Administrative data, for example file name, application description
- Safety-relevant data, such as the startup process
- Safety Zone or Warning Zone configuration data, for example contours and limits

The menu progression in the program assists the user with the configuration process.

2.9.1 System Requirements

To use the system, the personal computer must meet the following minimum requirements:

Component	Recommended	Minimum
Processor(s)	Pentium 4	Pentium 4
Clock frequency	≥ 3 GHz	≥ 2 GHz
RAM	2 GB	1 GB
Free hard drive space	70 MB	70 MB
Monitor resolution	1280 × 768	1024 × 768
Supported operating systems	Windows 7, Windows 8, Windows 10	

The PC must also be equipped with the following hardware and software drivers:
- Installed Ethernet network card and installed driver
- One free 100 Mbps Ethernet port

© Banner Engineering Corp. All rights reserved.
www.bannerengineering.com

2.9.2 Safety and Warning Zones

The software makes it easy to establish Safety and Warning Zones. The Safety Zone and the Warning Zone are user-defined areas that the scanner monitors.

An intrusion into the Safety Zone (such as a person walking into a monitored work cell) causes the SX to turn its safety outputs off. An intrusion into the Warning Zone causes the SX to create a warning signal.

Safety Zone and Warning Zone settings are created and saved as zone sets. The number of configurable zone sets available for the SX are dependent on the model.

Model	Type of Unit	Cable Wiring	Maximum Zone Sets
SX5-B and **SX5-B6**	Stand-alone	8-pin	6
SX5-M10	Master	8-pin	3
SX5-M10	Master	12-pin	10
SX5-M70 and **SX5-ME70**	Master	17-pin	20
SX5-M70 and **SX5-ME70**	Master	17-pin and 8-pin	70

Zone sets can be enabled or disabled, one set at a time, while the SX is operational and actively monitoring a work area. This function is useful when changing machine guarding requirements create the need for changes in Safety Zone and Warning Zone dimensions.

2.9.3 Monitored Space Display

When the SX is actively monitoring an area, it measures the distance to, and the angular position of, objects in the area. These measurement data are transferred via an Ethernet connection to the PC when the Monitoring function is selected. The software uses this data to constantly update the display to show the Safety Zone and Warning Zone along with the measured surfaces of the monitored area.

> **NOTE:** The monitoring function cannot be performed until a configuration has been loaded into the scanner.

Figure 11. Monitored space as shown by the configuration software

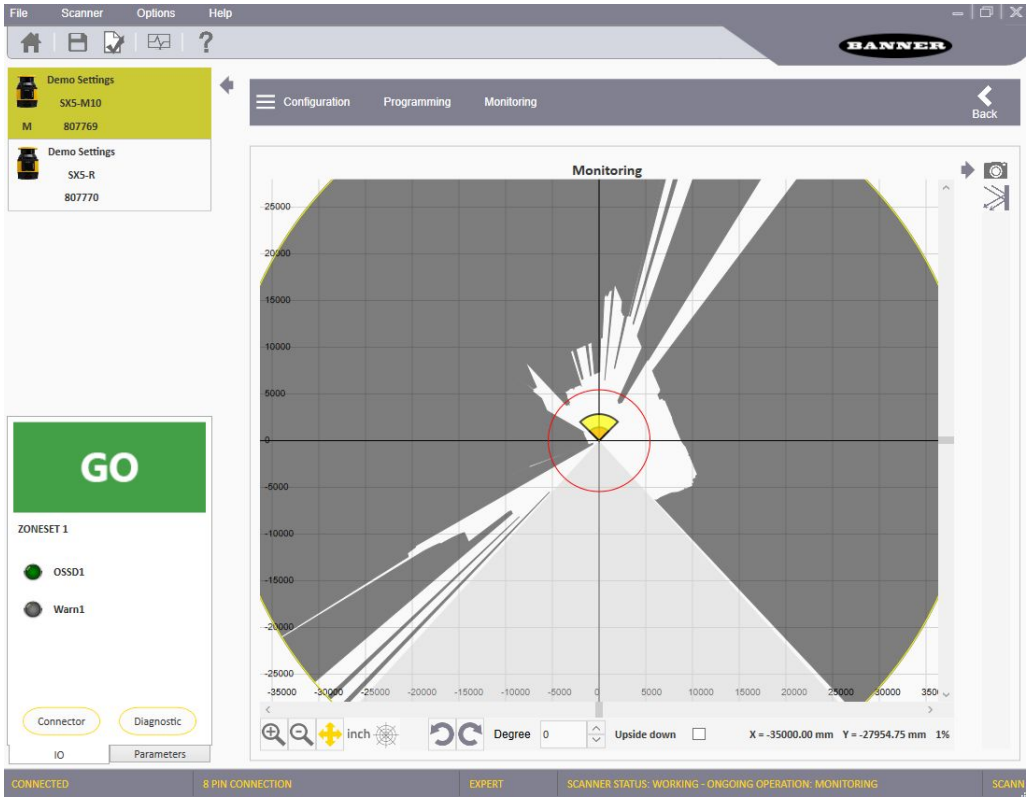

© Banner Engineering Corp. All rights reserved.
www.bannerengineering.com

2.10 Security Protocol

Certain procedures for installing, maintaining, and operating the SX must be performed by either Designated Persons or Qualified Persons.

A **Designated Person** is identified and designated in writing, by the employer, as being appropriately trained and qualified to perform system resets and the specified checkout procedures on the SX. The Designated Person is empowered to:

- Perform manual resets and hold possession of the reset key (see "Resetting the System" on page 109)
- Perform the Daily Checkout Procedure

A **Qualified Person**, by possession of a recognized degree or certificate of professional training, or by extensive knowledge, training, and experience, has successfully demonstrated the ability to solve problems relating to the installation of the SX System and its integration with the guarded machine. In addition to everything for which the Designated Person is empowered, the Qualified Person is empowered to:

- Install the SX System
- Perform all checkout procedures
- Make changes to the internal configuration settings
- Reset the System following a lockout condition

2.11 General Safety Information

- The machine stopping system must be electrically controlled.
- This control system must be capable of stopping the dangerous movement of the machine within the total machine stopping time (Ts) and during all the machine cycle phases.
- The device mounting and connections, must be carried out by qualified personnel only, according to the instructions included in the mechanical installation and electrical connection sections of this manual and applicable standards.
- The safety laser scanner must be securely placed in a particular position so that access to the dangerous zone is not possible without passing through the Safety Zone of the scanner.
- The personnel operating in the dangerous area must be well training and must have adequate knowledge of all the operating procedures of the machine and safety laser scanner.
- In cases of Manual Restart, the reset button must be located outside the safety area, see the reset switch location section of this manual.
- The requirements for electrical safety and electromagnetic compatibility and the regulations or standards in all countries and/or regions, must be met by the power supply where the laser scanner is used. If the device power supply is shared with the machine or other electronic devices, voltage fluctuations to the laser scanner or noise influences to the scanner may occur due to temporary changes of the current consumption on the machine or the other electronic devices. We do not recommend sharing the laser scanner power supply with the one for the machine or the other electronic devices, because the device may go to an error state in such circumstances.
- Do not run the connection cables in contact with or near high-voltage cables and/or cables which undergo large current variations (i.e. motor power supplies, inverters, etc.).
- Access to the configuration tools must be restricted to only highly qualified personnel. The configuration upload process through the GUI is allowed only by password.

2.12 Specifications

Power Consumption

No output load (P_0) at 24 V DC: 8 W for a stand-alone scanner

No output load (P_0) at 24 V DC: 8 W + 8 W for each remote scanner for a master scanner

With maximum output load at 24 V DC: P0 plus 12 W per OSSD pairs used (or Warning pair outputs)

Power-up delay: 120 seconds, typical (this value depends on models and Master/Remote configuration)

Current Consumption (24 V DC)

No output load (I_0) at 24 V DC: 0.3 A for a stand-alone scanner

No output load (I_0) at 24 V DC: 0.3 A plus 0.3 A for each remote scanner for a master scanner

With maximum output load at 24 V DC: I_0 plus 0.5 A per OSSD pair used (or warning pair outputs)

Static Input Generic

Input voltage high: > 12 V

Input voltage low: < 5 V

Input current high: 2 mA at 24 V DC

Input impedance: 12 kΩ

© Banner Engineering Corp. All rights reserved.
www.bannerengineering.com

Connectors

I/O and power: M12 male type A connector (8/12/17 pins)

Ethernet to GUI or Data transmission: M12 male type D connector (4-pin)

Master to Remote and Remote to Remote: M12 male type A connector (8-pin)

Power and Electrical Protection

Protection class: III (EN 61140 / IEC 61140)

Supply voltage: Uv 24 V DC (19.2 V … 30 V DC) (SELV/PELV)[2]

Residual ripple: ± 5% [3]

Start-up current (1): < 0.6 A [4]

The Scanner should be connected only to a SELV (Safety Extra-Low Voltage) for circuits without earth ground or a PELV (Protected Extra-Low Voltage) for circuits with earth ground power supply.

To meet the requirements of the relevant product standards (for example. EN 61496-1), the external power supply for the devices (SELV/PELV) must be able to bridge a brief mains failure of 20 ms. SELV/PELV power supplies according to EN 60204-1 satisfy this requirement.

Light Beam Diameter

At front screen: 8 mm

At middle field distance: 10 mm

At max distance: 20 mm

Detectable remission: 1.8% to 1000%

Maximum homogeneous contamination of the optics cover without preventing the detection capability –30% of nominal optic power

Output (warning and generic)

Output logic and protection: PUSH-PULL, Overcurrent protection

Output voltage for ON status (HIGH): Uv – 2 V at 250 mA

Output voltage for OFF status (LOW): ≤ 0.2 V

Output current for ON status (HIGH): 250 mA

Leakage current: < 700 µA [5]

Load inductance: 2 H

Load capacity: 2.2 µF

Optical Data

Wavelength: 905 nm

Pulse duration: 3 nsec

Average output power: 8 mW

Laser class: CLASS 1 (EN 60825-1:2014+A11:2021)

Divergence of collimated beam: 0.12°

Mechanical Data

Dimensions (W × H × D): 102 × 152 × 112.5

Weight (including system plug): 1.5 kg

Housing material: Aluminum Alloy

Housing color: Yellow RAL1003

Optics cover material: PC

Optics cover surface: Acrylic

OSSD (Safety Output)

OSSD logic and protection: PUSH-PULL, Overcurrent protection

Output voltage for ON status (HIGH): Uv – 2 V at 250 mA

Output voltage for OFF status (LOW): ≤ 0.2 V

Output current for ON status (HIGH): 250 mA

Leakage current: < 700 µA [6]

Max Load inductance: 2 H

Max Load capacity: 2.2 µF

Test pulse width: 115 µs (typical)

Test period on a single OSSD: 900 ms (typical)

Test pulse shift time between OSSD outputs in a pair: 150 ms (typical)

Test pulse shift time between OSSD outputs (separate pairs): 300 ms (typical)

Safety Data

Type 3 (EN 61496-1)

SIL 2 (IEC 61508)

Category 3 (EN ISO 13849-1)

SILCL 2 (EN 62061)

PL d (EN ISO 13849-1)

PFHd (mean probability of a dangerous failure per hour): 6.38 × 10^{-8}

SFF: 97.58%

MTTFd: 61 Years

TM (mission time): 20 years (EN ISO 13849-1)

HFT (Hardware Fault Tolerance): 1

State of safety: OSSD in OFF State (open circuit → I OSSD = 0)

Response time to malfunction: ≤ Response Time

Environmental Rating

IEC IP65

Operating Conditions

–10 °C to +50 °C (+14 °F to +122 °F)[7]

95% maximum relative humidity (non-condensing) (According to IEC 61496-1 5.4.2; IEC 61496-3 5.4.2; 4.3.1; 5.4.4.3)

Storage Conditions

–20 °C to +70 °C (–4 °F to +158 °F)

Shock

According to IEC 61496-1 4.3.3.2 ; 5.4.4.2

IEC 60068-2-29; Acceleration: 10 g; Pulse Duration: 16 ms; Number of Shocks: 1000 ± 10 (for each of the three mutually perpendicular axes)

IEC 61496-3 5.4.4.1-3 ; IEC 60068-2-75 ; Hammer test

Vibration

According to IEC 61496-1 4.3.3.1 ; 5.4.4.1 ; IEC 60068-2-6

Frequency from 10 Hz to 55 Hz ; Scan Speed 1 octave/min

Range: 0.35 mm ± 0.05 mm

[2] To meet the requirements of the relevant product standards (e.g. EN 61496-1), the external voltage supply for the devices (SELV) must be able to bridge a brief mains failure of 20 ms. Power supplies according to EN 60204-1 satisfy this requirement.

[3] The absolute voltage level must not drop below the specified minimum voltage.

[4] The load currents for the input capacitors are not taken into account.

[5] In the case of a fault (0 V cable open circuit) maximally the leakage current flows in the OSSD cable. The downstream controller must detect this status as LOW. A FPLC (fail-safe programmable logic controller) must be able to identify this status.

[6] In the case of a fault (0 V cable open circuit) maximally the leakage current flows in the OSSD cable. The downstream controller must detect this status as LOW. A FPLC (fail-safe programmable logic controller) must be able to identify this status.

[7] We recommend that you allow for a 15-minute warm up from a cold start.

© Banner Engineering Corp. All rights reserved.

Resolution and Range

Models	Resolution (mm)	Max. Range (m)
SX5	30 (Not available in the SX5-B model.)	2.5
	40	3.0
	50 (Not available in the SX5-B model.)	4.0
	70	5.5
	150 (Not available in the SX5-B model.)	5.5

Certifications

Banner Engineering BV
Park Lane, Culliganlaan 2F bus 3
1831 Diegem, BELGIUM

AOPDDR 5KE3

Required Overcurrent Protection

WARNING: Electrical connections must be made by qualified personnel in accordance with local and national electrical codes and regulations.

Overcurrent protection is required to be provided by end product application per the supplied table.

Overcurrent protection may be provided with external fusing or via Current Limiting, Class 2 Power Supply.

Supply wiring leads < 24 AWG shall not be spliced.

For additional product support, go to www.bannerengineering.com.

Supply Wiring (AWG)	Required Overcurrent Protection (A)	Supply Wiring (AWG)	Required Overcurrent Protection (A)
20	5.0	26	1.0
22	3.0	28	0.8
24	2.0	30	0.5

Features

Warning field range:

- 8 m (typical) for flat black 1.8% target
- 22 m (typical) for flat gray 18% target
- 40 m (typical) for flat white 90% target
- 50 m (typical) for flat reflecting target

Scanning angle: 275°

Detection capability: 30/40/50/70/150 mm selectable

Scan cycle time: 30 ms

Response time: Programmable from 62 to 1202 ms (482 ms for the SX5-B model)

Network Latency Time (Master/Remote models): 10 ms for each connected remote unit (1 remote unit adds 10 ms to response time, 2 remote units adds 20 ms to the response time and 3 remote units adds 30 ms response time)

Wait Time for Next Zone Switching: 60 ms delay from expiration of previous one (from end of the Input Delay Maximum time)

Tolerance zone max (Z_{SM}): 150 mm

Angular resolution: 0.1°

Maximum number of Zones sets:

- Stand-alone model: 6
- 8-pin master model: 3
- 12-pin master model: 10
- 17-pin master model: 20
- 17+8 pin master model: 70

Maximum number of Warning Zones: 2

Maximum number of OSSD pairs: 3

Supplement for retro-reflectors on scan plane in front of a safety zone: 200 mm (see "Highly Reflective Backgrounds" on page 33)

Supplement for high ambient light within ± 5° of scan plan: 200 mm (see "Light Interference" on page 33)

Deviation from ideal flatness of scan field at max safety range: < 5 cm

Distance between center point of scan plane and top edge of housing: 37.7 mm

Distance of mirror rotational axis (zero point of x and y axis) to rear side of housing: 52.5 mm

© Banner Engineering Corp. All rights reserved.
www.bannerengineering.com

2.12.1 Dimensions

All measurements are listed in millimeters, unless noted otherwise. The measurements provided are subject to change.

Figure 12. Stand-alone models

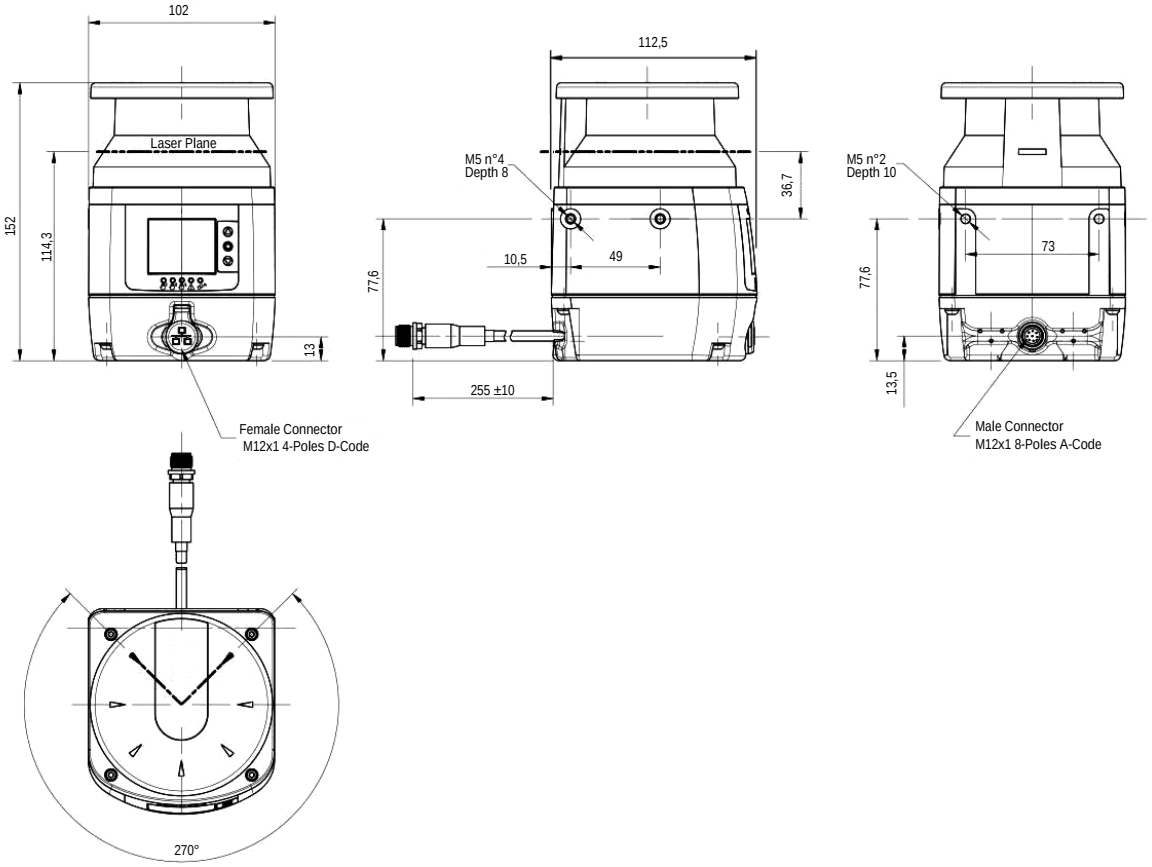

Figure 13. Master models

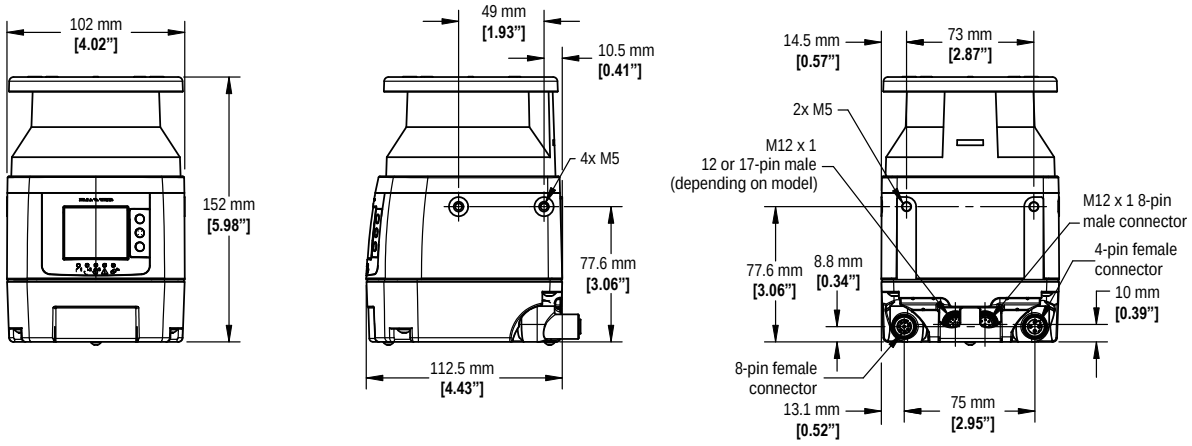

© Banner Engineering Corp. All rights reserved.
www.bannerengineering.com

Figure 14. Remote models

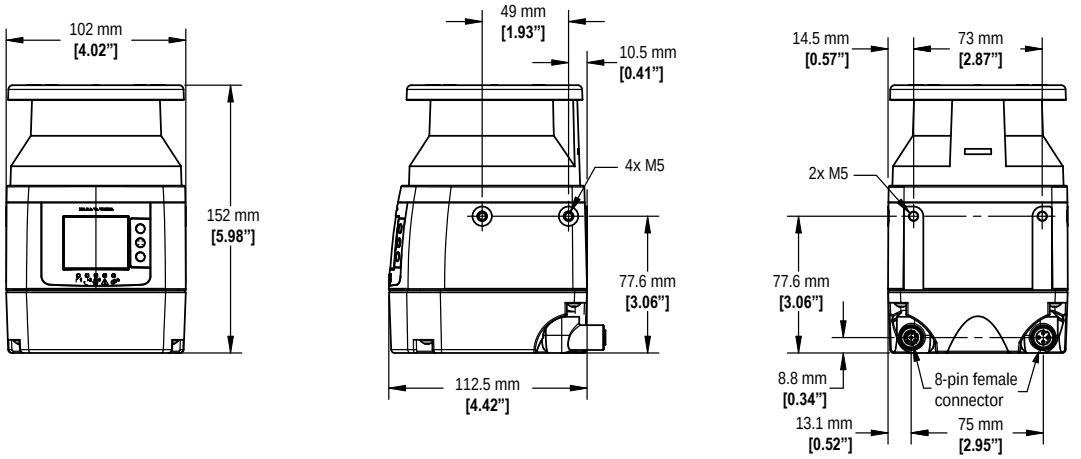

© Banner Engineering Corp. All rights reserved.
www.bannerengineering.com

Chapter Contents

3.1 Safety Zone (SZ) and Warning Zone (WZ) Considerations 28
3.2 Mechanical Installation Considerations 29
3.3 Positioning Horizontal Safety Zones for Stationary Applications 37
3.4 Minimum Safety (Separation) Distance for Stationary Applications 38
3.5 Minimum Safety (Separation) Distance Formula 38
3.6 Reducing or Eliminating Pass-Through Hazards 41
3.7 Reset Switch Location 42
3.8 Supplemental Safeguarding 42
3.9 Mobile Applications 43
3.10 Mounting System Components 46

Chapter 3 Install Your Scanner

A horizontal Safety Zone is considered to be 30° or less from a level floor or walking surface.

1. Determine the area to be safeguarded by the scanner.
2. Determine whether to install the SX with or without a Banner mounting option.
3. Determine the size and coverage of the Safety Zone and Warning Zone (if used) depending on the physical location of the scanner installation and the minimum safety distance or the stopping distance of the mobile vehicle.

   See "Minimum Safety (Separation) Distance for Stationary Applications" on page 38 and "Mobile Applications" on page 43.
4. Determine the restart operating mode (manual or automatic reset). See "Automatic or Manual Start/Restart" on page 74.
5. If Manual restart is used, determine the location for the reset switch, see the reset switch location section of the manual.
6. Determine if a Zone Set switchover is required and identify the conditions for use.
7. Configure the SX with the configuration software.
8. Record the SX configuration and the Safety/Warning Zone dimensioning. This document should identify and be signed by the individual(s) responsible for the configuration and be included with the machine documentation.
9. For stationary applications, it is recommended to mark the perimeter of the Safety Zone(s) on the floor as an awareness means for individuals in the area. For mobile applications, it is recommended that the diagram be readily available for review.
10. If required, install means to protect the SX from physical damage, sources of optical interference (e.g. other scanners), or prevent the SX from being used as a climbing aid. Ensure that these means do not impair the SX's field of view.

3.1 Safety Zone (SZ) and Warning Zone (WZ) Considerations

- Ensure the dimension (size) and coverage of the Safety Zone can detect an intrusion and allow the scanner's OSSDs to stop the dangerous movement before personnel can access the hazard. (See "Minimum Safety (Separation) Distance for Stationary Applications" on page 38 and "Minimum Distance D (Safety Zone Length) for Mobile Applications" on page 45.)
- Ensure that access to all hazards is not possible for all Zone Set switchover applications.
- Ensure that safety distance and stopping distance calculations incorporate all factors that can effect response time, including:
  - The additive effect of all device response times, such as the scanner, UM-FA-… safety module, and all machine control elements (FSDs and/or MPCEs).
  - Add the appropriate response time values to account for any reasonably foreseeable machine stop time degradation, such as due to brake pad wear.
- Ensure that the Safety Zone adequately covers all access routes that may lead to the safeguarded hazard or supplemental guarding may be required (see "Unmonitored Areas" on page 29).
- Ensure that the safeguarded hazard(s) cannot be accessed because of the effect of "shadowing" within the Safety Zone by adding supplemental safeguarding, such as additional scanners.

© Banner Engineering Corp. All rights reserved.
www.bannerengineering.com

- Observe the lateral tolerance when dimensioning the Safety Zone (e.g. do not use needle or cone-shaped boundaries to define the separation (safety) distance; cone-shaped boundaries rely on less accurate, angular resolution measurements).
- Consider and resolve any other application factors that might require an increase in the separation (safety) distance or stopping distance. These factors should be identified via the risk assessment process.
- Determine if the reference points (surface) monitoring function is required (especially in vertical applications). This function prevents unintentional misalignment and deliberate manipulation of the SX (see "Reference Points (Surface) Monitoring" on page 19).

3.2 Mechanical Installation Considerations

Many factors influence the layout of the SX's mechanical installation. For stationary applications, these include separation (safety) distance, supplemental safeguarding (hard guarding), unmonitored areas (shadows or areas behind the SX), adjacent SXs, and the height of the Safety Zone (in horizontal applications). In addition, mobile applications must take into account the stopping performance and distance of the mobile vehicle the SX is controlling.

WARNING:

- **The hazard must be accessible only through the sensing field**
- Incorrect system installation could result in serious injury or death.
- The installation of the SX must prevent any individual from reaching around, under, over or through the defined area and into the hazard without being detected.
- See OSHA CFR 1910.217, ANSI B11.19, and/or ISO 14119, ISO 14120 and ISO 13857 for information on determining safety distances and safe opening sizes for your guarding device. Mechanical barriers (for example, hard (fixed) guarding) or supplemental safeguarding might be required to comply with these requirements.

3.2.1 Unmonitored Areas

WARNING:

- Unmonitored areas can create an access route to the hazard or a blind zone where a person cannot be detected. The area behind the Scanner and near it, on either side is not monitored.
- Failure to minimize the unmonitored area could result in serious bodily injury or death.
- Minimize the unmonitored area so that no one can access this area undetected (for example, by recessing the Scanner into the machine, using supplemental safeguarding, or using mechanical barriers to prevent access).

Behind and To the Sides of the Scanner

The area behind and on either side the SX is not monitored. It must not be possible to walk in unmonitored areas or otherwise access them. This can be accomplished by recessing the SX into the machine, using supplemental safeguarding, or using mechanical barriers to prevent access. If there is a possibility that the SX could be used as a climbing aid or standing surface, use a physical cover set at an angle over the SX.

Special attention to these areas must be addressed in vertical Safety Zone applications so that the resolution at the edges of the Safety Zone does not increase. If an increased resolution cannot be prevented, then the worst-case resolution must be used to determine the **Dpf** (U.S. formula) or the **C factor** (European formula) in the safety distance calculations.

© Banner Engineering Corp. All rights reserved.
www.bannerengineering.com

Figure 15. Safety Zone unmonitored areas

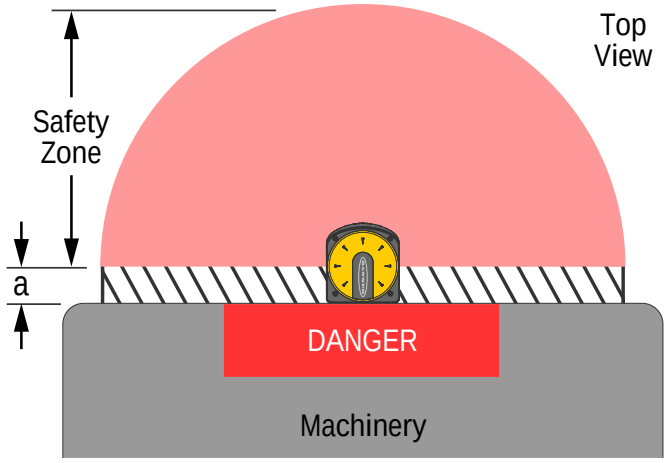

Figure 16. Mounting the scanner recessed into the machine

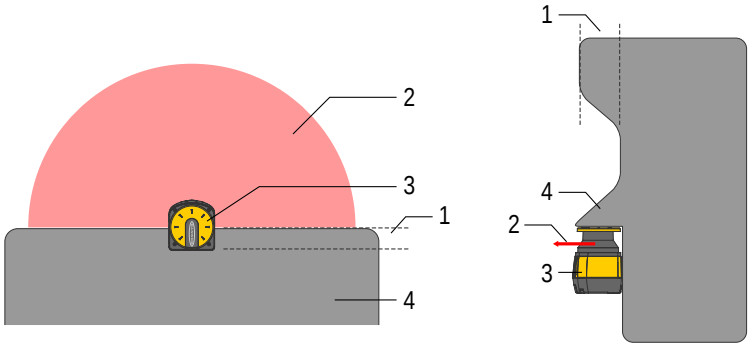

1. Recessing into the machine surface
2. Safety Zone (SZ)
3. Scanner
4. Machine

Shadowing Within the Safety Zone

WARNING:

- Permanent and moveable objects in the Safety Zone can create a shadow that results in an unprotected zone that may provide an access route to the hazard.
- Failure to eliminate access routes caused by the shadowing effect could create a potentially dangerous condition that may lead to serious injury or death.
- Eliminate any unprotected access routes by repositioning the SX, installing additional SXs, or by adding supplemental safeguarding.

Objects that are located within the Safety Zone create an unmonitored area directly behind the object. This area is best described as a shadow, since the light emitted by the SX cannot bend around or penetrate through solid objects. The shadow effect can be caused by both opaque and transparent objects.

Any unmonitored areas resulting from the shadow effect must not allow unprotected access routes to the hazard. This can be prevented by repositioning the SX, installing additional SXs, or by adding supplemental safeguarding.

If the object is moveable, such as a scrap bin, do one or more of the following:

- Locate the unmonitored area at a greater distance from the hazard than the calculated safety distance;
- Enable an alternate Zone Set when the object is relocated; or
- The moveable object must be interlocked to stop and prevent the safeguarded hazard, if the object is moved.
- Identify the object with Reference Points (see "Reference Points (Surface) Monitoring" on page 19)

© Banner Engineering Corp. All rights reserved.
www.bannerengineering.com

Figure 17. A shadow within the Safety Zone

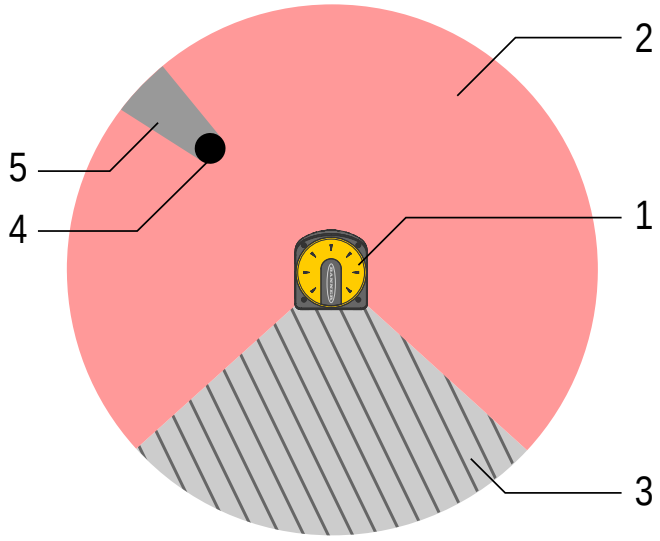

1. Scanner
2. Safety Zone
3. Unmonitored area
4. Obstruction (for example, a building column)
5. Unmonitored area because of the shadow effect

Needle- and Cone-Shaped Safety Zone Contours

WARNING:
- Needle- and Cone-shaped Safety Zone contours
- Boundaries or contours that rely on too few measurement points (e.g., one or two) may not reliably turn OFF the OSSDs when an object is present.
- Any safety distance calculations must consider and resolve the effects of needle- or cone-shaped Safety Zones.

Needle- and cone-shaped Safety Zone boundaries are not recommended, because they may not reliably detect and respond to objects (for example, turn OFF the OSSDs), compared with smooth-field boundaries made up of multiple measurement points. Two effects are to be considered:

1. Not identifying the proper size of the detected object (outward cone shapes), and
2. An increase in resolution (inward cone shapes).

Outward Needle- and Cone-Shaped Field Contours — An object equal to or greater than the stated resolution (e.g., 70 mm) will be detected at point A (Object 1), because enough sensing points are present at that location to detect the full 70 mm size of the object.

Objects 2 or 3 may not be identified as being larger than the resolution because at that distance, the angle is too narrow (and has too few sensing points) to detect the full 70 mm resolution size.

Inward Needle- and Cone-Shaped Field Contours — The effect of an inward cone-shape is to increase the effective resolution immediately adjacent to the shape. For the Scanner to identify that an object is equal to or greater than the stated resolution (e.g., 70 mm), the entire object must be within the Safety Zone to turn OFF the OSSDs (e.g., Object 4). When an object enters the unmonitored cone-shaped area, the start/restart inhibit function will enable a reset as soon as the object portion within the Safety Zone is smaller than the stated resolution (Objects 5 and 6). This will turn ON the OSSDs if the configuration is set to automatic restart, or if the reset switch is actuated.

To prevent a safety distance that is too short at that point, the increased effective resolution must be used to determine the Dpf or C factor in the respective safety distance formulas. If a cone-shaped field must be used and the safety distance cannot be complied with, additional supplemental safeguarding must be used.

To verify Safety Zone effectiveness, perform a trip test.

© Banner Engineering Corp. All rights reserved.
www.bannerengineering.com

Figure 18. Example of inward and outward cone-shaped fields



3.2.2 Adjacent Scanners

WARNING:

- Interference from Adjacent SXs
- Interference from adjacent SXs may cause the OSSDs to go to the OFF state.
- SXs with a clear line of sight to another SX and that share the same detection plane with it, must be adjusted or shielded so that their light pulses are not detected by the adjacent SXs.

The SX design minimizes the possibility of optical interference from adjacent Scanners. Light from adjacent scanners (including those of other manufacturers) can cause OSSDs to go to the OFF state. To eliminate the possibility of optical interference causing the OSSDs to turn off:

- Install mechanical shielding/barriers in stationary applications (both horizontal and vertical Safety Zones).
- For scanners mounted side-by-side, this shielding must be at least at the height of the front screen (window) and flush with the front of the housing.
  - Ensure that the means of shielding does not create any unmonitored areas.
  - Install SXs at an off-set height greater than the height of the scanner output window (60 mm).
- Install SXs with Safety Zones with a crossed alignment.

Figure 19. Scanners mounted at different scanning angles

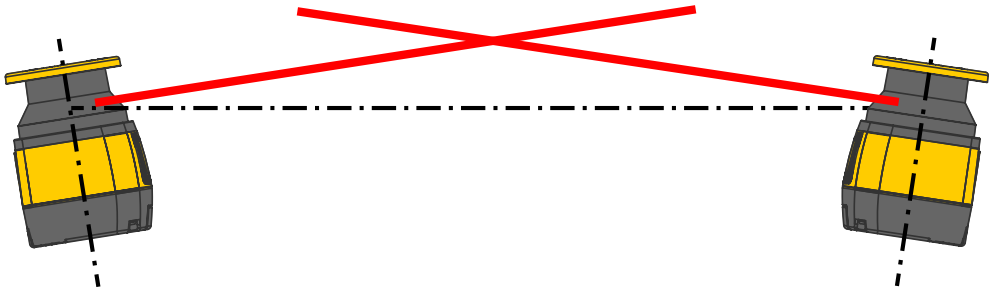

Figure 20. Scanner mounted at different scanning heights

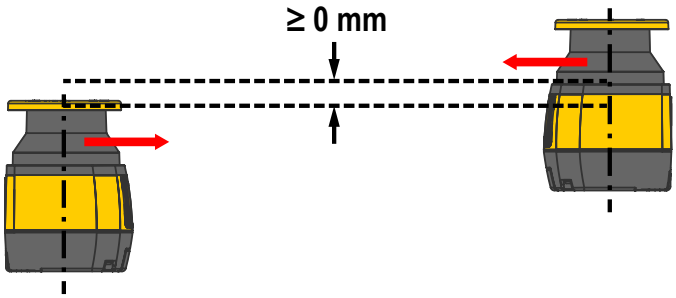

© Banner Engineering Corp. All rights reserved.
www.bannerengineering.com

Figure 21. Shielding plate between scanners

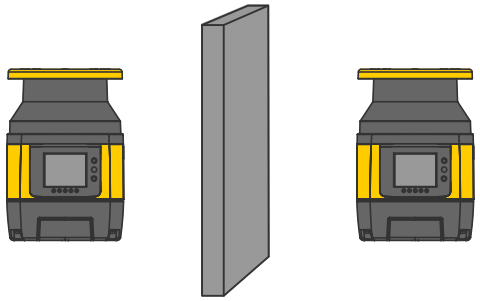

To further aid in cross-talk avoidance, the scanners feature four selectable scan codes. See "Anti-interference Coding" on page 36

3.2.3 Light Interference

Reflective surfaces located near the safety device may cause passive reflections. These reflections can affect the detection of an object inside the safety zone. The passive light sources can be an incandescent lamp, sunlight, a fluorescent light, a strobe light or other infrared light sources.

Do not install the SX Series Safety Laser Scanner near strong and/or flashing light sources.

Ambient light may interfere with the functioning safety laser scanner. If the installation requires direct exposure to ambient light, the scanner must be positioned so that the light does not enter the output window within ±5° of the detection plane.

Figure 22. Position the scanner to avoid light interference

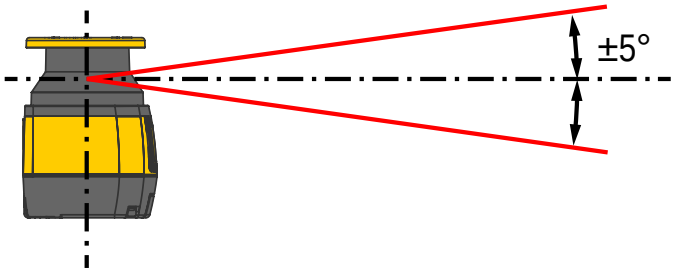

CAUTION: In all applications where strong light within ±5° of the detection plane cannot be avoided, apply an additional distance (Z_{amb}) to the Minimum Safety Distance calculations. This distance could be influenced by the selected Dust Filter Level and the presence of reflective backgrounds of light sources (e.g. halogen lamp with back reflector). For all models except SX5-B, an additional distance of 200 mm is typically enough to prevent any reduction in the detection capability (for the SX5-B see "Additional Information (for SX5-B models)" on page 144 to determine the extra distance needed). See the minimum safety distance calculation section ("Minimum Safety (Separation) Distance Formula" on page 38), and the dust filtering section ("Dust Filtering" on page 35).

CAUTION: In any case where bright light is present outside the ±5° range, the additional distance is still highly recommended.

IMPORTANT: In cases of both light interference and high reflective backgrounds, additional distances do not have to be summed, but the longest distance should be used.

3.2.4 Highly Reflective Backgrounds

If there is a highly reflective background within 3 meters of the safety zone boundary, for example a metallic glossy surface, the SX Series Safety Laser Scanner might fail to recognize the exact distance of the detected object.

In this situation, we recommend reducing or removing the reflecting background.

© Banner Engineering Corp. All rights reserved.
www.bannerengineering.com

Figure 23. Reduce or remove a highly reflecting background

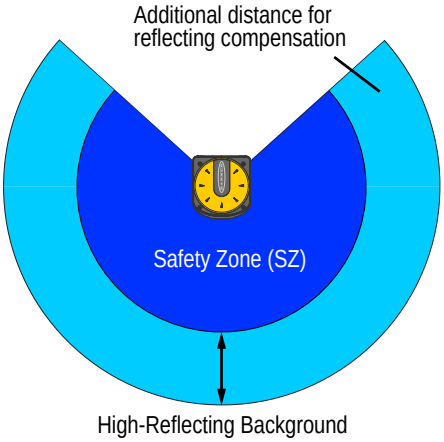

CAUTION: In all applications where highly reflective backgrounds within 3 meters of the Safety Zone boundary cannot be avoided, an additional distance (Z_{amb}) must be applied to the Minimum Safety Distance calculations. This distance also depends on the Dust Filter Level setting and on the background characteristics. For all models except SX5-B, an additional distance of 200 mm is typically enough to prevent any reduction in the detection capability (for the SX5-B, refer to "Additional Information (for SX5-B models)" on page 144 to determine the extra distance needed). See the minimum safety distance calculation section ("Minimum Safety (Separation) Distance Formula" on page 38), and the dust filtering section ("Dust Filtering" on page 35).

3.2.5 Anti-Tamper Function

The scanner continually monitors for conditions caused by tampering in the work area and/or the device that may create interference or improper operation leading to a potential loss or reduction in the safety function. If these conditions are found, the device forces a STOP condition and the display shows the full stopped state until the condition ceases.

Figure 24. Full stop state



This function is selectable from the scanner software (Detection Configuration page) for flexibility or use in various applications.

CAUTION: Disabling the function or selecting an activation delay time longer than 5 s (if the function is kept enabled) must be carefully evaluated by qualified personnel (or team) in charge of machine safety through a specific analysis (risk assessment), which could lead to the introduction of additional safety measures.

The forced STOP state is activated within 30 ms when the device does not receive a return signal powerful enough to be processed (seen) on at least 700 consecutive beams of scanner path (equal to or greater than an angular section of 70°). The forced STOP state ends within 30 ms of the mentioned condition ceasing for at least 50 consecutive beams (equal to or greater than an angular section of 5°) of the 70°.

This anti-tamper condition can occur in various situations in the field. The most common conditions are:

- No objects are present up to the maximum working distance of 50 m over a portion of the scanner area.

© Banner Engineering Corp. All rights reserved.
www.bannerengineering.com

- Objects are present at a distance less than 50 m on a portion of the scanning area, but the objects' reflectivity do not generate appreciable echoes (light returns). For example, very dark and opaque objects (as a reference, objects with 1.8% reflectivity may not be detected if placed at distances greater than 9 m; objects with 18% reflectivity may not be detected if placed at distances greater than 23 m).
- The scanner window is obscured (for example, with a dark cloth) within the limited detection zone, partially or completely hindering the field of view.
- There are highly reflective surfaces in the scanner area (for example, mirrors, polished surfaces, windows, metal, etc.) positioned to divert the trajectory of the light beams out of the scanner's reception range.

3.2.6 Limited Detection Capability Zone

If the safety laser scanner is positioned in a limited detection capability zone, the device may not detect an object with low reflectance located at a distance of 100 mm or less from the safety zone origin (center of the scanner). This is the zone with limited detection capability.

In this circumstance, it is recommended to make the risk assessment take into account the possibility that an object can cross a zone with limited detection capability. If possible, responsible personnel must provide an additional solution.

Figure 25. Limited detection capability zone

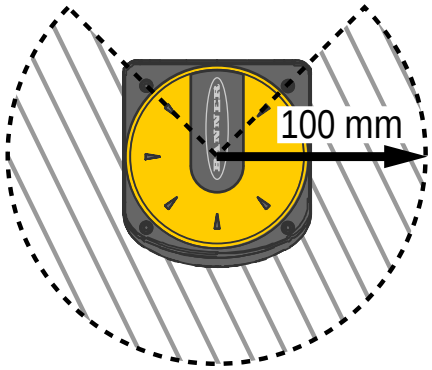

3.2.7 Dust Filtering

Set the Dust Filter Level according to different conditions specific to the application. In general, it is the sensitivity to various levels of airborne particles that impact the response of the SX Series Safety Laser Scanner detection.

Set the Dust Filter Level to the lowest value that still allows the machinery to work without detecting dust.

- Use a **LOW** dust filter level (default in the configuration software) in cleaner environments where airborne particles have little effect on object detection.
- Use a **MID** dust filter level in environments where some airborne particles are present and can influence object detection.
- Use a **HIGH** dust filter level in dirty environments to filter (ignore) detection of airborne particles to ensure that they do not cause the scanner to detect objects in the zone set when nothing is present. This makes the SX Series Safety Laser Scanner less sensitive to dust and avoids shutting down the machinery unnecessarily.

The Dust Filter Level setting affects the additional distance that must be applied to the Minimum Safety Distance Calculations ("Minimum Safety (Separation) Distance Formula" on page 38). In addition to the level of airborne particles in the safety laser scanner's environment, some special lighting conditions also affect the detection sensitivity. These special lighting conditions are:

- The presence of bright light within ±5° of the detection plane (see "Light Interference" on page 33).
- Highly reflective backgrounds within 3 m of the Safety Zone boundary (see "Highly Reflective Backgrounds" on page 33).

WARNING: These special conditions require additional distance to be added to the Minimum Safety Distance calculations to avoid a person or object arriving at the danger zone before the machine shuts off. This distance also depends on the Dust Filter Level setting.

© Banner Engineering Corp. All rights reserved.
www.bannerengineering.com

3.2.8 Anti-interference Coding

Anti-interference coding allows using four different emission modes to minimize interference among scanners working in the same environment. If scanners can interfere with each other (shine into each other), select a different code for each scanner. This function is also available for all connected devices in a master/remote configuration. Anti-interference coding is not available in the **SX5-B** model.

The scanner scans the surrounding area cyclically at a constant speed. The time for an entire cycle is fixed and is called the **scan cycle time**. The scan cycle time depends on the selected scan code.

Select the code on the **Detection Configuration** screen of the configuration software. The selection of a scan code other than 0 affects the response time of the relevant device since it changes the scan time. The available scan codes are:

Anti-Interference Code	Scan Cycle Time
Scan Code 0 (default)	30 ms
Scan Code 1	30.5 ms
Scan Code 2	31 ms
Scan Code 3	31.5 ms

The software automatically calculates the system response time based on the number of connected devices (master/remotes), scan cycles, and the selected anti-interference code. This response time is rounded up to the highest integer value in milliseconds.

3.2.9 Master and Remote Configurations

Each master can support up to three remote scanners. All the machine communications are done with the master, which then passes on the commands to the remote scanners. If a remote scanner is blocked, a signal travels back up the chain to the master, which turns off the master scanner's outputs.

Each remote scanner adds a system latency of 10 ms.

Configuration	Fastest Response Time (ms)
Master only	62
Master with one remote scanner	72
Master with two remote scanners	82
Master with three remote scanners	92

This worst-case response time can be used in all calculations, but it is really the response time for Remote 3. If the master is blocked, its outputs would turn off in 62 ms since no latency is added going from one remote to the next or to the master.

3.2.10 Shut-Off Functionality

The Shut-Off function allows energy saving, which can be particularly useful when the scanner is used in battery-powered applications, such as AGVs.

When the scanner is in Shut-Off status, some of its functions are deactivated, but the device is still active and ready to restore normal operation when needed.

The configuration software does not allow the user to update the firmware version, change a configuration, or set parameters (e.g. IP address, password) when the scanner is in Shut-Off status.

The Shut-Off function is enabled or disabled on the Zone Set configuration page of the configuration software (see "Zone Set Configuration" on page 90). When the Shut-Off function is enabled, Zone Set 1 is automatically assigned as the Shut-Off Zone Set (changes from Zone Set 1 to Shut-Off). The Shut-Off Zone set cannot have any Safety or Warning Zones and the encoder speed range is set to 0.

When the Shut-Off function is engaged (turned on in the scanner), the SHUT-OFF icon shows on the display for 30 seconds. After that, the display switches to power safe mode and all LEDs go off.

To restore the scanner to normal operation, change the Zone set. The scanner needs approximately 30 seconds to reactivate all its functions. During this time, the display shows the RES SHUT-OFF icon. After this re-start time, the display and the LEDs indicate that the scanner is back to normal operation.

© Banner Engineering Corp. All rights reserved.
www.bannerengineering.com

NOTE: If the Shut-Off function is enabled after Safety and/or Warning Zones have been created for Zone Set 1, they will be deleted.

NOTE: When a cluster of scanners is in Shut-Off status, the removal of a remote unit will result in an INTF18 (topology error) fault. If the cluster topology must be changed, remove the power.

3.3 Positioning Horizontal Safety Zones for Stationary Applications

Height of the Safety Zone Above the Floor or Walking Surface — The Safety Zone should not be located more than 1000 mm above the floor H.

Where H > 300 mm, there is a risk that a person can go undetected. In this case, supplemental guarding may be required. The minimum allowable height of the Safety Zone (H) is a function of the scanner's detection capability (resolution) and is calculated using the following formula:

`H = 15 × (d − 50 mm)` or `H = 15 × (d − 2 in)` where

d = the Scanner's Detection Capability (Resolution)
H = the distance of the Safety Zone above the walking surface

Detection Capability (Resolution) (d)	Minimum Height (H)
≤ 50 mm (2 in)	0
70 mm (2.8 in)	300 mm (12 in)
90 mm (3.5 in)	600 mm (24 in)
117 mm (4.6 in)	1000 mm (39 in)
H should not be greater than 1000 mm (39 in)	

This ensures detection of a given body part (e.g., thigh, leg, ankle) for a given resolution. For example, a Safety Zone with 70 mm resolution may not reliably detect an ankle (which requires a 50 mm resolution). Thus, the 70 mm resolution Safety Zone is intended to reliably detect a leg and should be mounted 300 mm or more above the walking surface.

For a given Safety Zone height, the corresponding maximum detection capability (resolution) d can be calculated using the following formula:

`d = (H/15) + 50 mm` or `d = (H/15) + 2 in`

Figure 26. A zone with 70 mm resolution is mounted no lower than 300 mm above the floor

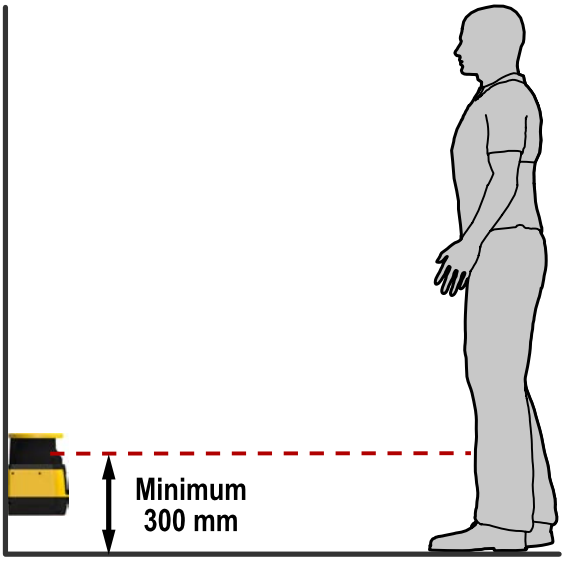

© Banner Engineering Corp. All rights reserved.
www.bannerengineering.com

WARNING:
- Safety Zone height (stationary horizontal fields)
- Where the height of a horizontal Safety Zone is H > 300 mm, there is a risk that a person can go undetected beneath the field.
- If it is possible for an individual to crawl undetected under the Safety Zone and access the hazard, install supplemental guarding to prevent this access.

3.4 Minimum Safety (Separation) Distance for Stationary Applications

Response Time Considerations — The SX's mirror rotates every 30 ms (33.3 scans [revolutions] per second). The safety outputs will switch off only after an object is detected in the Safety Zone for at least two consecutive scans. The SX's minimum response time is therefore 62 ms (2 × 30 ms + 2 ms).

To increase the SX's reliability in an adverse environments (e.g., with fine airborne particles), increase the number of scans required before the scanners safety outputs turn off. With each additional scan the response time (Tr) increases by 30 ms. With K = 1600 mm/s the separation (safety) distance increases by 48 mm per additional scan.

WARNING:
- **Scanner Response Time Adjustments**
- Failure to follow this recommendation could result in serious bodily injury or death.
- Do not increase the SX's 62 ms response time for vertically positioned Safety Zones such as work cell access (Entry/ Exit) or perimeter guarding applications where a person could move quickly through the Safety Zone without being detected.

The Safety Zone must maintain a tolerance of at least 40 mm from any wall or fixed object. This 40 mm value is generally enough to guarantee normal operation, however according to the real reflectance characteristics of the surface, a higher value may be necessary. The Teach-In feature of the software automatically applies a tolerance of 100 mm. This can be changed manually if necessary.

WARNING:
- Determine the correct stop time (T)
- An incorrect stop time can lead to serious bodily injury or death. Be sure to include the stop time of all relevant devices and controls in the calculations.
- Stop time (T) must include the response time of all devices or controls that react to stop the machine. If all devices are not included, the calculated Safety distance (S) will be too short.

WARNING:
- Maintain the proper safety distance
- Failure to establish and maintain the minimum safety distance could result in serious bodily injury or death.
- Locate the Safety Zone far enough from the nearest hazard such that an individual cannot reach the hazard before cessation of hazardous motion or situation.

3.5 Minimum Safety (Separation) Distance Formula

When all factors that influence the Safety Distance are considered, the formula is as follows.

3.5.1 U.S. Applications

$$D = (K \times T) + d_{ds} + Z$$

© Banner Engineering Corp. All rights reserved.
www.bannerengineering.com

D

The Safety Distance of a device in inches or mm.

K

The maximum speed that an individual can approach the hazard.

63 in/sec or 1600 mm/sec as recommended by OSHA 29CFR1910.217 and ANSI B11.19. Various studies indicate speeds of 1600 mm/sec (63 in/sec) to more than 2500 mm/sec (100 in/sec), however, the studies are not conclusive determinations. Consider all factors, including the physical ability of operators, when determining the value of K to be used.

T

The total time to achieve a safe condition (seconds).

The total time is the total of the following five components:

T_d = the reaction time of each device
T_i = the reaction time of the device interface(s)
T_c = the reaction time of control system
T_s = the reaction time of the machine
T_{scm} = the time associated with stopping-performance monitoring (safe-condition monitoring system)

(see note below)

d_{ds}

The reaching distance associated with devices (inches or mm).

Z

Supplemental distance factors (inches or mm). For example, measurement errors, reflection-based measurement errors, lack of ground clearance of moving equipment, or decreasing braking torque of moving equipment.

> **NOTE:** T_S is usually measured by a stop-time measuring device. If the machine manufacturer's specified stop time is used, add at least 20% to allow for possible clutch/brake system deterioration. This measurement must take into account the slower of the two MPCE channels, and the response time of all devices or controls that react to stop the machine (e.g., UM-FA-9A safety module). See Notice Regarding MPCEs in "Machine Primary Control Elements and External Device Monitoring" on page 55. If all devices are not included, the calculated safety distance (D) will be too short and serious injury could result.

d_{ds} Considerations

Horizontal Safety Zone Applications (parallel approach)

d_{ds} = 1200 mm (48 in)

Scanner-Specific Additional Distance Factors (Z) — Two scanner-specific factors must be considered when calculating the Minimum Safety distance:

1. Measurement Tolerance Factor
2. Ambient Interference Factor

Measurement Tolerance Factor is the additional distance needed to account for distance measurement error. The value for is 100 mm (3.94 in). For Vertical Safety Zones (normal approach), the value is 0.

Ambient Interference Factor is the additional distance needed to account for measurement errors due to light interference and/or reflections from highly reflective or shiny surfaces that are present in the scanning plan.

No ambient interference, then 0.
Ambient interferences present, add 200 mm (for SX5-B value is interpreted from the graph based on dust filter level)

Example: U.S. Information d_{ds} Considerations for Vertical Safety Zone Applications (Normal Approach)

For Detection Capability (Resolution), where d ≤ 64 mm (2.5 in), i.e. 40 mm, the formula for d_{ds} is: $d_{ds} = 3.4 \times (d - 7\text{ mm})$ or $d_{ds} = 3.4 \times (d - 0.275\text{ in})$

Where d = the scanner's detection capability (resolution)

For a Detection Capabilities (Resolution) of d > 64 mm (2.5 in), i.e. 70 mm, d_{ds} is 900 mm (36 in).

For a Detection Capability (Resolution) of 40 mm the d_{ds} is 112 mm (4.5 in).

© Banner Engineering Corp. All rights reserved.
www.bannerengineering.com

Resolution	D_{ds}
30 mm (1.2 in)	78 mm (3.1 in)
40 mm (1.6 in)	112 mm (4.5 in)
50 mm (2 in)	146 mm (5.9 in)
70 mm (2.75 in)	900 mm (36 in)
150 mm (5.9 in)	900 mm (36 in)

3.5.2 European Applications

$$S = (K \times T) + D_{DS} + Z$$

S

The separation distance in mm (not less than 100 mm)

K

The approach speed in mm/s (approach speeds of body or part of the body as stated in ISO 13855)

- 2000 mm/s for the speed of upper limbs
- 1600 mm/s for walking

(see note 1 below)

T

The overall system response time in seconds
(see note 2 below)

D_{DS}

Supplements the reaching distance associated with a protective device (mm)

Z

The application-dependent supplemental distance factor (mm), such as for measurement uncertainty, brake wear, reflection, etc.

NOTE: The above formula is derived from ISO 13855 (2024).

1. If S is greater than 500 mm, then K = 1600 mm/s can be used instead of the 2000 mm/s speed, however, if the 1600 mm/s value is used, then S can never be less than 500 mm.
2. T is the time from the actuation of the sensing function to the machine's assuming a safe condition, comprising a minimum of two phases: T = t1 + t2 where:
   - t1 is the maximum time between the actuation of the sensing function and the output signal switching devices (OSSDs) being in the OFF state. This is the response time of the SX.
   - t2 is the maximum response time of the machine, i.e. the time required to stop the machine or remove the risks after receiving the output signal from the protective equipment. t2 is influenced by temperature, switching time of valves, ageing of components, and other factors. t2 is usually measured by a stop-time measuring device. If the machine manufacturer's specified stop time is used, add at least 20% to allow for possible clutch/brake system deterioration. This measurement must take into account the slower of the two MPCE channels, and the response time of all devices or controls that react to stop the machine (e.g., UM-FA-9A safety module). If all devices are not included, the calculated safety distance (D) will be too short and serious injury could result.

Distance Adjustment D_{DS}, Based on the Possible Field Intrusion

Horizontal Safety Zone Applications (Parallel Approach)

D_{DS} = 1200 mm – (0.4 × H) or D_{DS} = 48 in – (0.4 × H)

where H is the distance of the Safety Zone above the floor or walking surface (1000 mm maximum). D_{DS} can never be less that 850 mm (34 in).

© Banner Engineering Corp. All rights reserved.
www.bannerengineering.com

Figure 27. Calculating the safety distance for each resolution

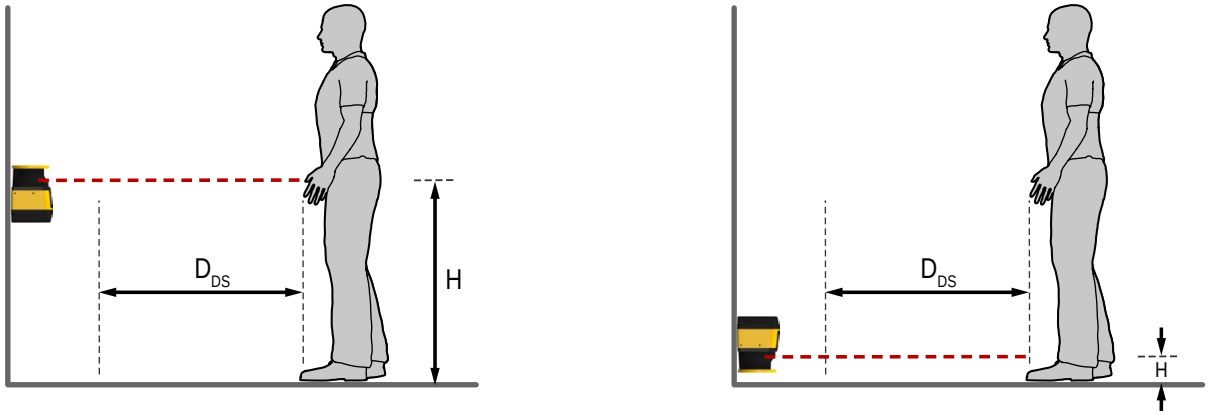

Additional Scanner-Specific Distance Factors

Two scanner-specific factors must be considered when calculating the Minimum Safety distance:

1. Measurement Tolerance Factor
2. Ambient Interference Factor

Measurement Tolerance Factor is the additional distance needed to account for distance measurement error. The value for is 100 mm (3.94 in). For Vertical Safety Zones (normal approach), the value is 0.

Ambient Interference Factor is the additional distance needed to account for measurement errors due to light interference and/or reflections from highly reflective or shiny surfaces that are present in the scanning plan.

No ambient interference, then 0.
Ambient interferences present, add 200 mm (for SX5-B value is interpreted from the graph based on dust filter level)

European Information Distance Adjustment D_{DS} , Based on the Possible Field Intrusion for Vertical Safety Zone Applications (Normal Approach)

For a Resolution of 40 mm (1.6 in), the formula for D_{DS} is: $D_{DS} = 8 \times (d - 14\ mm)$ or $D_{DS} = 8 \times (d - 0.55\ in)$

Where d = the scanner's detection capability (resolution)

For a resolution of 70 mm (2.8 in): D_{DS} = 850 mm (34 in)

For a Detection Capability (Resolution) of 40 mm, D_{DS} is 208 mm (8.2 in)

3.6 Reducing or Eliminating Pass-Through Hazards

A pass-through hazard is associated with applications where personnel may pass through a safeguard, such as the SX Series Safety Laser Scanner (which issues a stop command to remove the hazard), and then continues into the guarded area. This is common in access and perimeter guarding applications. Subsequently, their presence is no longer detected, and the related danger becomes the unexpected start or restart of the machine while personnel are within the guarded area.

A pass-through hazard typically results from large safety distances calculated from long stopping times, large minimum object sensitivities, reach-over, reach-through, or other installation considerations. A pass-through hazard can be generated with as little as 75 mm (3 in) between the sensing field and the machine frame or hard (fixed) guarding.

Eliminate or reduce pass-through hazards whenever possible. While it is recommended to eliminate the pass-through hazard altogether, this may not be possible due to machine layout, machine capabilities, or other application considerations.

One solution is to ensure that personnel are continually sensed while within the hazardous area. This can be accomplished by using supplemental guarding, such as described by the safety requirements in ANSI B11.19 or other appropriate standards.

An alternative method is to ensure that once the safeguarding device is tripped it will latch and will require a deliberate manual action to reset. This method of safeguarding relies upon the location of the reset switch as well as safe work practices and procedures to prevent an unexpected start or restart (auto start/restart (trip) condition) of the guarded machine. The SX Series Safety Laser Scanner provides a configurable manual start/restart (latch) function for these applications.

© Banner Engineering Corp. All rights reserved.
www.bannerengineering.com

WARNING:
- **Use of the Banner device for Access or Perimeter Guarding**
- Failure to observe this warning could result in serious injury or death.
- If a Banner device is installed in an application that results in a pass-through hazard (for example, perimeter guarding), either the Banner device or themachine primary control element (MPCEs) of the guarded machine must cause a Latched response following an interruption of the defined area.
- The reset of this Latched condition may only be achieved by actuating a reset switch that is separate from the normal means of machine cycle initiation.

WARNING:
- **Perimeter guarding applications**
- Failure to observe this warning could result in serious injury or death.
- Use lockout/tagout procedures per ANSI Z244.1, or use additional safeguarding as described by ANSI B11.19 safety requirements or other applicable standards if a passthrough hazard cannot be eliminated or reduced to an acceptable level of risk.

3.7 Reset Switch Location

Mount the reset switch at a location that complies with the warning and guidelines below. If any hazardous areas are not in view from the switch location, additional means of safeguarding must be provided. The switch should be protected from accidental or unintended actuation (for example, through the use of rings or guards).

A key-actuated reset switch provides some operator or supervisory control, as the key can be removed from the switch and taken into the guarded area. However, this does not prevent unauthorized or inadvertent resets due to spare keys in the possession of others, or additional personnel entering the guarded area unnoticed. When considering where to locate the reset switch, follow the guidelines below.

WARNING:
- **Install reset switches properly**
- Failure to properly install reset switches could result in serious injury or death.
- Install reset switches so that they are accessible only from outside, and in full view of, the safeguarded space. Reset switches cannot be accessible from within the safeguarded space. Protect reset switches against unauthorized or inadvertent operation (for example, through the use of rings or guards). If there are any hazardous areas that are not visible from the reset switches, provide additional safeguarding.

All reset switches must be:
- Outside the guarded area
- Located to allow the switch operator a full, unobstructed, view of the entire guarded area while the reset is performed
- Out of reach from within the guarded area
- Protected against unauthorized or inadvertent operation (such as through the use of rings or guards).

IMPORTANT: Resetting a safeguard must not initiate hazardous motion. Safe work procedures require a start-up procedure to be followed and the individual performing the reset to verify that the entire hazardous area is clear of all personnel before each reset of the safeguard is performed. If any area cannot be observed from the reset switch location, additional supplemental safeguarding must be used: at a minimum, visual and audible warnings of machine start-up.

3.8 Supplemental Safeguarding

Position the scanner components so an individual cannot reach through the defined area and access the hazard point before the machine has stopped.

© Banner Engineering Corp. All rights reserved.
www.bannerengineering.com

Additionally, the hazard cannot be accessible by reaching around, under, or over the defined area. To accomplish this, install supplemental guarding (mechanical barriers, such as screens or bars), as described by ANSI B11 safety requirements or other appropriate standards. Access must only be possible through the defined area of the Scanner or through other safeguarding that prevents access to the hazard.

The mechanical barriers used for this purpose are typically called hard guarding; there must be no gaps between the hard guarding and the defined area. Any openings in the hard guarding must comply with the safe opening requirements of ANSI B11 or other appropriate standard.

WARNING:

- **The hazard must be accessible only through the sensing field**
- Incorrect system installation could result in serious injury or death.
- The installation of the SX must prevent any individual from reaching around, under, over or through the defined area and into the hazard without being detected.
- See OSHA CFR 1910.217, ANSI B11.19, and/or ISO 14119, ISO 14120 and ISO 13857 for information on determining safety distances and safe opening sizes for your guarding device. Mechanical barriers (for example, hard (fixed) guarding) or supplemental safeguarding might be required to comply with these requirements.

Figure 28. Supplemental safeguarding inside a robotic work cell

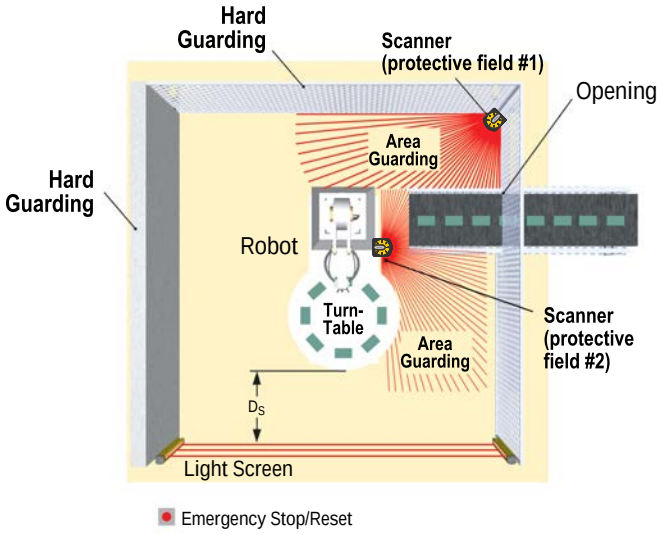

This shows an example of supplemental safeguarding inside a robotic work cell. The safety light screen, in conjunction with the hard guarding, is the primary safeguard. Supplemental safeguarding (such as scanners used as area guards) is required in areas that cannot be viewed from the reset switch (for example, behind the robot and the conveyor). Additional supplemental safeguarding may be required to prevent clearance or trapping hazards (e.g., the safety mat as an area guard between the robot, the turntable, and the conveyor).

3.9 Mobile Applications

The SX can protect individuals entering an area with a variable or moving hazard, protect individuals and objects located within a mobile vehicle's path, and protect the mobile vehicle and its load from collisions.

Only use the SX on vehicles with electrical drives (e.g. servo) or electrically controlled drive and braking. The Safety Zone must be configured so that the mobile vehicle can come to a complete stop before a collision can occur. If it is not possible to completely safeguard the vehicle, including trailers, protruding or overhanging loads, etc., during the full length of travel, including curves, use additional safeguarding, such as additional SX or bumper/edge switches.

The following instructions are general in nature and are intended to provide guidance to safely install the SX on mobile vehicles. It is not possible to give exact recommendations for all mobile applications; the designer/user must also comply with the vehicle manufacturer's recommendations and all applicable regulations and standards. See also the warning and the basic installation guidelines.

© Banner Engineering Corp. All rights reserved.
www.bannerengineering.com

Safety standards covering mobile vehicles or automated/automatic guided vehicles (AGV) include:

- ISO 3691-4 — Industrial Trucks - Safety Requirements and verification - Part 4: Driverless industrial trucks and their systems
- ANSI/ITSDF (ASME) B56.5 — Safety Standard for Guided Industrial Vehicles
- IEC 61496-3 — Requirements for Active Opto-Electronic Protective Devices Responsive to Diffuse Reflection (AOPDDR)

The user must also regularly check the safeguarding function of the SX, and the speed and braking functions of the mobile vehicle (see "Initial Checkout" on page 70).

The user must instruct all individuals that may interact with the mobile vehicle (at a minimum) to:

- not approach the vehicle directly or from the sides while moving
- familiarize themselves with warning signals or lights/beacon
- familiarize themselves with the size of the Warning and Safety Zones

3.9.1 Safety Zone Area - Length and Width

The horizontal Safety Zone will prevent a collision only if the edge of the field in the direction of movement is sufficiently distant from the vehicle and its load. This dimension (length) of the Safety Zone is described as the Minimum Distance D. The Side Distance Z (or the width of the Safety Zone) is used to ensure that the sides of the vehicle or a protruding load do not create a hazard.

It is highly recommended that an oversized Warning Zone (in comparison to the Safety Zone) be used. The Warning Zone and its associated output signal the approach of the mobile vehicle (e.g., by sounding a horn or illuminating lights/beacons), and reduce the speed of the mobile vehicle. This can reduce the need or the amount of braking and wear on the drive mechanisms.

The Safety Zone configuration must take into account trapping/crushing hazards that could be created by physical objects near the path of the mobile vehicle. An example would be an elevated conveyor that the sensing field of the Side Distance Z passes under, but does not provide enough clearance. This situation can occur if the distance between the end of the conveyor and the side of the mobile vehicle is less than 500 mm (20 in) per ISO 13854 (EN349) Minimum Gaps to Avoid Crushing.

The following items apply to the calculation for determining the Minimum Distance D (Safety Zone length):

- Maximum speed of the AGV (Do not rely on the speed reduction initiated by the Warning Zone!)
- The SX response time
- The response time of the mobile vehicle drive logic, including the response time of any interfacing devices, such as UM-FA-..A safety module (25 ms)
- The braking distance of the AGV (including environmental conditions, such as wet or slippery flooring)
- Absence or lack of clearance in front or to the sides of the AGV
- The speed of movement of an individual
- The reduced efficiency of the braking system, due to wear

WARNING:

- **Calculate the correct stop time**
- Failure to follow these instructions could result in serious injury or death.
- The Stop Time (TS) must include the response time of all relevant devices or controls that react to stop the mobile vehicle. If all devices are not included, the calculated Minimum Distance (D) will be too short.

WARNING:

- Maintain the proper separation distance
- Failure to establish and maintain the Minimum Distance D could result in serious bodily injury or death.
- Locate the Safety Zone far enough from the nearest hazard such that an individual cannot reach the hazard before cessation of hazardous motion or situation.

© Banner Engineering Corp. All rights reserved.
www.bannerengineering.com

3.9.2 Minimum Distance D (Safety Zone Length) for Mobile Applications

The following calculations do not specifically take into account the speed of an individual since it can be assumed that an individual will recognize and will avoid the hazard or at a minimum stop their movement. If this cannot be reasonably expected, such as if the Warning Zone is not used to signal the approach of the vehicle, the factor ZA should incorporate the expected speed of an individual.

When all factors that influence a mobile vehicle stopping performance are considered, the formula is: **$D = D_{SD} + Z_{SM} + Z_{amb} + Z_F + Z_A$** where:

D = Minimum distance from the vehicle surface to the edge of the Safety Zone in mm
D_{SD} = Stopping distance in mm
Z_{SM} = the additional distance needed to account for distance measurement error.
Z_{amb} = the additional distance needed to account for error due to reflections from retro-reflective surfaces.
Z_F = the additional distance needed to account for AGV ground clearance
Z_A = application-specific additions

Note: In the following figure, $Z_{LEAD} = Z_{SM} + Z_{amb} + Z_F + Z_A$

Figure 29. Calculating the minimum distance in a mobile vehicle application

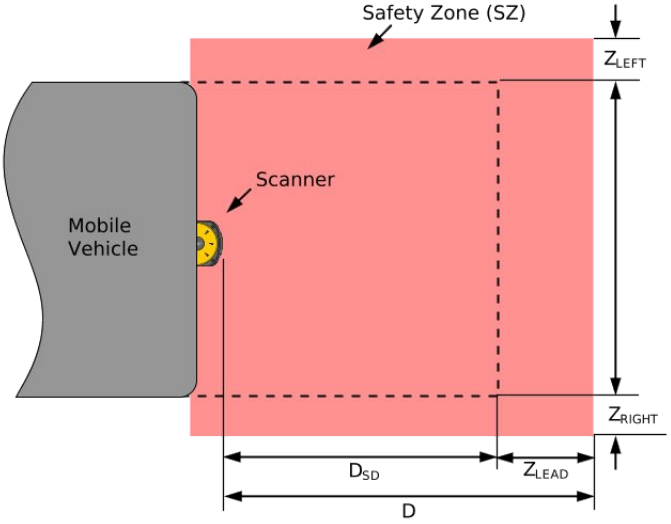

$D_{SD} = [V_{MAX} \times (T_S + T_R)] + D_B$

where:

D_{SD} = Stopping distance in mm
V_{MAX} = the maximum velocity as stated by the manufacturer of the mobile vehicle
T_S = maximum stop time (in seconds) of the mobile vehicle (see note 1 below)
T_R = maximum response time (in seconds) of the Scanner (see note 2 below)
D_B = Braking Distance at full load and speed as stated by the manufacturer of the mobile vehicle and other environmental factors (see note 3 below)

Notes

1. T_S for the mobile vehicle should be supplied by its manufacturer. T_S must include the response time of all devices or controls that react to stop the vehicle (e.g., UM-FA-9A Safety Module), which are added to determine the total time to cause braking/stopping. If all devices are not included, the calculated distance (D_{SD}) will be too short and serious injury could result.
2. Braking Distance (D_B) should incorporate factors such as brake deterioration and environmental factors that can impact braking (such as loose dirt/gravel, wet/moisture, icing, etc.) which can add 10% or more to the manufacturer's stated distance. It should be noted that braking distance is not a linear function; it increases by a square function as velocity increases.

3.9.3 Additional Distance Factors (Z) Specific for Mobile Applications

For mobile applications, two additional factors must be considered: Z_{SM} and Z_{amb}.

Z_{SM} Measurement Tolerance Factor—For Horizontal Safety Zones (parallel approach): Z_{SM} = 150 mm.

© Banner Engineering Corp. All rights reserved.
www.bannerengineering.com

Z_{amb} Retro Reflector Factor—The additional distance needed to account for measurement errors due to light interference (see section 3.x.4) and/or reflections from highly reflective or shiny surfaces in the scanning plan.

- No ambient interference $Z_{amb} = 0$
- Ambient Interferences present Z_{amb} = 200 mm; for more information and how to determine the value for the SX5-B model, refer to "Light Interference" on page 33 and "Highly Reflective Backgrounds" on page 33

Z_F Mobile Vehicle (AGV) Ground Clearance— The additional distance Z_F is required if the mobile vehicle does not have sufficient ground clearance (HF) such that there is no space under the vehicle or Scanner for the tips of feet. If the wheels are mounted near the side wall, always add an additional distance $Z_F \geq 150$ mm; otherwise Z_F is determined according to the following figure.

Figure 30. Diagram to determine the additional distance Z_F with lack of floor clearance H_F

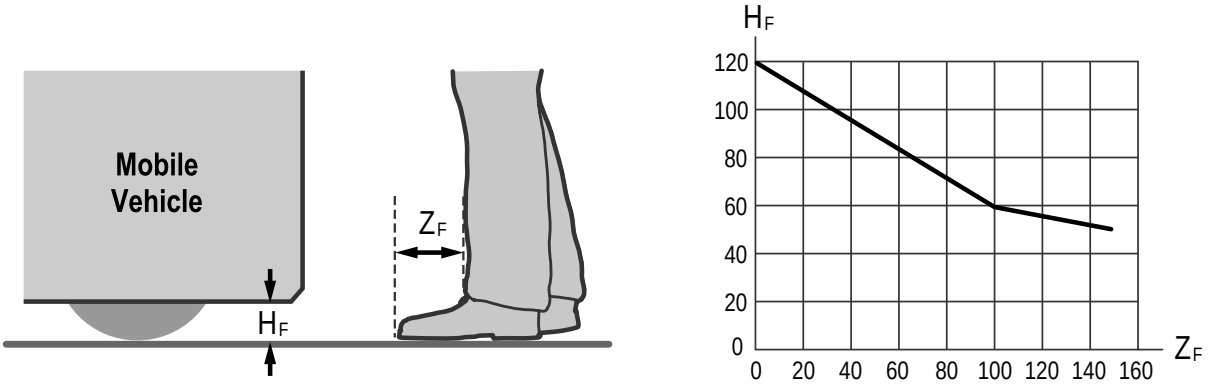

Z_A Application-Specific Additions— Z_A is the additional distance needed to account for factors that can otherwise affect the safe application of the SX. Examples include:

- Approach speed of an individual who is unaware of the vehicle's movement. ISO 13855 (Positioning of Safeguard with Respect to Approach Speed) defines walking speed as 1600 mm/s (63 in/s), thus $Z_A = 1600 \text{ mm/s} \times (T_S + T_R)$
- Additional clearance to avoid crushing, Z_A = 500 mm (20 in) per ISO 13854 (EN349)
- The effect of turning with long vehicles or trailers, resulting in large lateral travel

Multiple factors may or may not result in a cumulative effect: $Z_A = Z_{A1} + Z_{A2} + \ldots Z_{An}$. Evaluate each factor to determine its effect on all Additional Distance Factors (Z).

Additional Side Distance Z (Safety Zone Width)— The width of the Safety Zone is determined by the width of the mobile vehicle and the Additional Distance Factors (Z) as described. The distance Z may be different for the two sides and the leading edge. The width of the Safety Zone must be greater than the width of the mobile vehicle.

$Z = Z_{SM} + Z_{amb} + Z_F + Z_A$

It is important that the factor Z_A include the effect of turning with long vehicles or trailers, resulting in large lateral travel.

3.10 Mounting System Components

3.10.1 Mounting Your Scanner for Mobile Applications

The mounting of the SX should take into account:

- the surface contour of the path of the vehicle including holes, bumps, inclines, ramps, and other variations in the surface
- deflection of springs or other vibration dampeners that could cause the plane of the Safety Zone to vary
- unmonitored areas created by the installation of the SX

The point of mounting is typically in the center of the leading edge of the vehicle and is aligned horizontally to achieve a consistent scanning height over the entire Safety Zone.

Mounting Height— Mount the SX as low as possible to prevent people from passing beneath the sensing field by lying on the floor. ISO 3691-4 and IEC 61496-3 recommend that the Safety Zone with a resolution of 70 mm be as near as possible to the floor, but no greater than 200 mm (7.9 in) above the floor. In general, a height of 150 mm (5.9 in) has been recognized by industry to be the most advantageous height above the floor.

© Banner Engineering Corp. All rights reserved.
www.bannerengineering.com

Figure 31. Diagram to determine the additional distance with lack of floor clearance

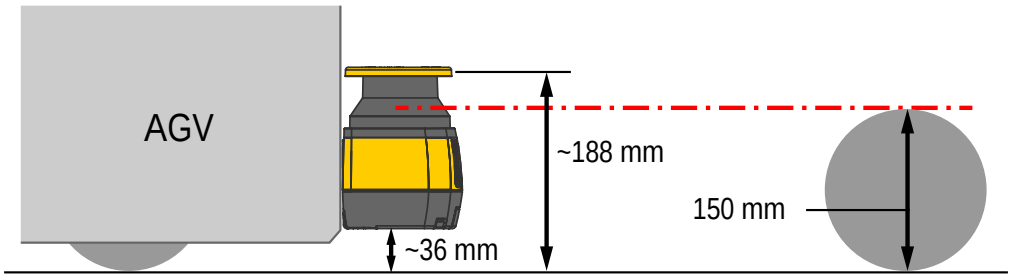

Unmonitored Areas—Mounting the SX on the mobile vehicle must not create unmonitored areas between the Safety Zone and the vehicle, such that the SX cannot respond to an object with a cross-section of 70 mm or more. Unmonitored areas on a mobile vehicle can be prevented by:

- Design/contour of the mobile vehicle
- Position of the Scanner
- Mounting the Scanner recessed within the vehicle
- Mounting the Scanner under a physical guard or overhanging parts of frame
- Using supplemental safeguarding, such as bumper or edge switches
- Using mechanical barriers to prevent access

3.10.2 Mounting the Scanner Directly to a Surface

The device has two M5 threaded holes on each side. For direct mounting, use both M5 threaded holes on a given side, taking into account the following values:

- M5 on the back (tightening torque of 2.3 to 5.5 N·m), maximum depth of thread engagement 9.5 mm
- M5 on the side (tightening torque of 2.3 to 3 N·m), maximum depth of thread engagement 8 mm

IMPORTANT: For direct mounting on the sides, if the wall or panel obstructs the output window, this plane cannot be used for safety zone monitoring. The safety zone must adhere to the minimum distance to wall value.

Figure 32. Mounting the scanner directly to a surface

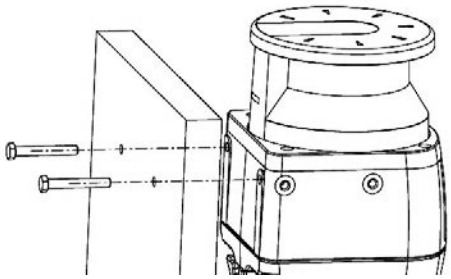

The M5 UNI 5933 screws used for mounting the brackets to a wall are not supplied in the bracket mounting kits; they must be supplied by the user.

If the direct mounting procedure to the back is chosen, it is not possible to add the protection bracket to the device.

© Banner Engineering Corp. All rights reserved.
www.bannerengineering.com

3.10.3 Mounting the Protection Bracket

Figure 33. Mounting the SXA-MBK-2 protection bracket to the scanner

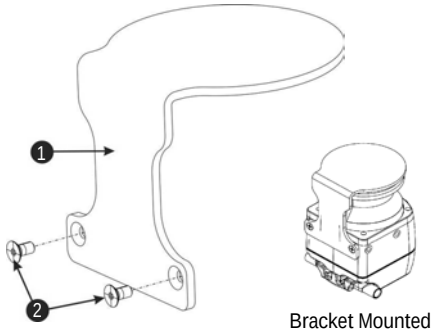

The **SXA-MBK-2** protection bracket is an optional accessory that provides protection to the scanner if it is located in an environment where the scanner may be hit by falling objects or subject to collision.

Fasten the protection bracket (1) on the back of the scanner using two M5 screws (2) (maximum of 3 N·m torque). Mount the **SXA-MBK-2** bracket onto the scanner before installing the other mounting accessories.

IMPORTANT: This protection bracket consumes the mounting holes on the back of the unit. Use other holes to mount the scanner to the machine.

The bracket is made from 4 mm (6 gauge) cold-rolled steel with a clear zinc chromate finish.

3.10.4 Mounting the Angle Adjustment Brackets

Provide two M5 holes with 73 mm spacing on the intended wall or mounting surface. The M5 UNI 5933 screws used for mounting the brackets to a wall are not supplied in the bracket mounting kits; they must be supplied by the user.

Pitch and roll angle adjustment bracket (SXA-MBK-1)—The bracket system is partially assembled.

1. Remove the M4 roll adjustment screws and washers (7), then align the M5 wall mounting screws (9).
2. Mount the roll adjustment bracket (8) to the wall or panel by inserting two M5 UNI 5933 screws (9). Tighten them, alternating between the two, until they are tight (torque to 2.5 to 3 N·m).
3. Place the assembly of (1) and (6) back onto the roll adjustment bracket (8) (or turn back into place) and re-install the M4 roll adjustment screws and washers (7). Do not tighten the M4 roll adjustment screws for the roll angle.

If only pitch adjustment is desired, the entire SXA-MBK-1 can be used with the roll adjustment centered (level) or the back plates (6 and 8) can be removed and only the pitch adjustment bracket (1) is used to mount the scanner. To remove 6 and 8 first remove the roll adjustment screws (7) to remove the back plate (8). Then remove the four screws that attach (6) to (1) from the back.

The pitch adjustment plate (1) can now be mounted to the 73 mm spaced holes using the M5 UNI 5933 screws (9). Tighten the screws, alternating between the two, until they are tight (2.5 to 3 N·m torque).

Figure 34. Pitch and roll angle adjustment bracket (SXA-MBK-1)

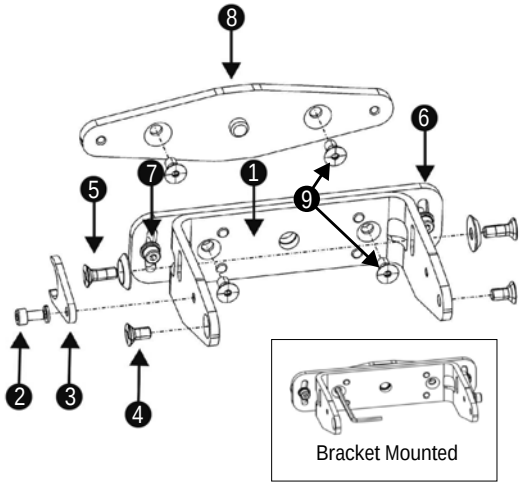

3.10.5 Mounting the Scanner and Adjusting the Angle

When mounting the brackets or scanner, do not exceed the listed torque or you will damage the scanner. The pitch angle adjustment procedure applies to both uses of the bracket assemblies.

The Positioning Memory Bracket (one piece) saves the inclination angle set for the installation. This allows for quick installation without further mechanical adjustments if it is ever necessary to replace the unit.

© Banner Engineering Corp. All rights reserved.
www.bannerengineering.com

To mount the device with 90° vertical inclination:

1. Mount the Positioning Memory Bracket (3) with the M4 screw (and washer) (2) to the main bracket (1) but do not tighten it.
2. Align the Positioning Memory Bracket with the center of the main bracket slot, then tighten the M4 screw (do not exceed 1.5 to 2 N·m torque).
3. Mount the scanner to the main bracket using the M5 × 12 Pitch Adjustment Screws (with washers) (5) and the M5 × 12 Scanner Fastening Screws (4). Tighten all four screws (do not exceed 2.5 to 3 N·m torque).

To place a device with a specific pitch angle:

1. Screw without tightening the M5 Scanner Fastening Screws, the M5 Pitch Adjusting Screws, and the Positioning Memory Bracket with the M4 screw.
2. Rotate the device to the desired pitch angle within the allowed range (± 6°).
3. Tighten the M5 Scanner Fastening Screws and then the M5 Pitch Adjusting Screws (do not exceed 2.5 to 3 N·m torque).
4. Tighten the Positioning Memory Bracket M4 screw (do not exceed 1.5 to 2 N·m torque).

Figure 35. Adjust the scanner angle

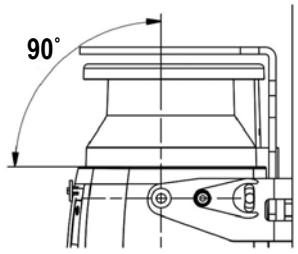

3.10.6 Adjusting the Roll Angle

The roll angle adjustment procedure only applies when all parts of bracket SXA-MBK-1 are used.

Rotate the brackets to reach the desired roll angle within the allowed range (± 8.5°). Tighten the M4 Roll Adjusting Screws (7) (do not exceed 1.5 to 2 N·m torque).

Figure 36. Adjust the roll angle

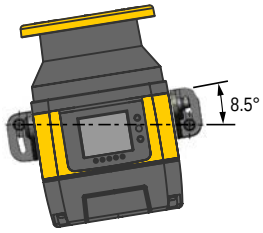

3.10.7 Scanner Mounting Safety Information

Verify the protection level assured by the SX Series Safety Laser Scanner is compatible with the danger level of the working machine, according to EN ISO 13849-1 or IEC 62061.

Dangerous Machine Status:

- Verify the machine is off (not operating) during mounting, electrical installation, and commissioning.
- Verify the safety laser scanner's outputs do not affect the machine during mounting, electrical installation, and commissioning.
- Mounting and connecting the device must be carried out by qualified personnel only, according to the indications included in the specific sections and in the applicable standards.
- Securely install the safety laser scanner so that access to the dangerous zone is not possible without passing throughout the safety area. This must be done according to the indications included in the specific section and in the applicable standards.
- Please carefully read the instructions for the correct functioning before powering the device.

Hazard due to safety device malfunctioning:

- If unsuitable brackets are used, the device may become damaged. Only use approved brackets for mounting.
- Personnel or parts of the body may not be detected in case of non-observance.
- Take appropriate measures for vibration damping if vibration and shock specifications exceed the values and test conditions specified.
- Do not carry out any repairs to the device components.
- Do not open the device components if the document's procedures are not followed.
- The optics cover is an optical component. Verify the optics cover does not become dirty or scratched during mounting.
- Avoid fingerprints on the optics cover.
- Check the integrity of all the components and of all parts.
- If the components show damage, contact the factory.

© Banner Engineering Corp. All rights reserved.
www.bannerengineering.com

- Install the device so that the status indicators are clearly visible.
- Observe the minimum safety distances calculated for your machine.
- Install the safety laser scanner so that it is not possible to crawl beneath, climb over, or stand behind the safety area.
- Protect the device from dirt and damage by mounting it in the proper way.
- Do not restrict or obstruct the device's view.
- Correctly align the safety laser scanner even during mounting. If the safety laser scanner is intended to monitor an area of 275° on a corner, the safety laser scanner may be mounted rotated by a maximum of 2.5° about the vertical axis.

3.10.8 Mounting and Unmounting the Removable Memory

On Master units, the machine interface cables are connected to the Removable Memory (memory device) mounted on the bottom of the scanner. The following procedure describes how to access this removable memory device to connect the machine interface cables.

A 2.5 mm hex key is needed for this process. The use of an adjustable torque driver is preferred to prevent overtightening any of the screws and damaging the scanner housing.

1. Gently place the scanner on its top to expose the underside of the scanner.
2. With the 2.5 mm hex key, remove the black cover by loosening the two screws until the cover comes free.
   The screws in the cover are captive screws and should not be removed from the cover.



3. With the 2.5 mm hex key, loosen the two screws of the removable memory device.
   The removable memory device is connected to the scanner with captive screws. Only loosen the screws. They do not and should not be removed.



© Banner Engineering Corp. All rights reserved.
www.bannerengineering.com

4. Gently disconnect the removable memory device by lifting it from the scanner.
5. Connect the machine interface cable(s) (8-pin or 12-pin or 17-pin or 17- and 8-pin, depending on model).
6. Insert the removable memory device back onto the connector of the scanner and tighten the two screws (tightening torque is 1 N·m).



7. Replace the protective cover and tighten the two screws to hold it in place (tightening torque is 0.5 N·m).

© Banner Engineering Corp. All rights reserved.
www.bannerengineering.com

Chapter Contents

4.1 Routing Cordsets 52
4.2 Initial Electrical Connections 52
4.3 Electrical Connections to the Guarded Machine 53
4.4 Wiring Diagrams 57
4.5 Power Supply and PC Connections 68

Chapter 4 Electrical Connections

WARNING:

- Make the proper electrical connections
- Connecting equipment to the SX other than what is described in this manual could result in serious bodily injury or death.
- Make no more connections to the SX than are described in this manual.
- Electrical connections must be made by Qualified Personnel and must comply with NEC (National Electrical Code) and local standards.

Lockout/tagout procedures may be required (refer to OSHA 29CFR1910.147, ANSI Z244-1, or the appropriate standard for controlling hazardous energy). Following relevant electrical standards and wiring codes, such as the NEC, NFPA79 or IEC60204-1, always connect ground (red wire, see wiring diagrams).

4.1 Routing Cordsets

Connect the SX to the machine interface through the appropriate M12 machine interface connector(s) using color-coded cable wiring according to safety equipment regulations. Banner provides accessory cables with color-coded wiring (referenced in this manual) in compliance with the regulations and standards.

Attach the required cordsets to the SX and route the Machine Interface cable to the junction box, electrical panel, or other enclosure in which the safety module or other safety-related parts of the control system are located. This must be done per the local wiring code for low-voltage DC control cables and may require installation of electrical conduit. For information on Banner's accessory cables, see "Accessories" on page 124.

Attach the 4-pin M12 ethernet cable if it is to be permanently installed. If the connection is only to be used during configuration (and troubleshooting), route the cable to the PC such that it does not interrupt the scanning field. After the configuration is complete, remove the PC interface cable and replace the dust cover.

The SX is designed and manufactured to be highly resistant to electrical noise and to operate reliably in industrial settings. However, extreme electrical noise may cause a random Trip or Latch condition. In extreme cases, a Lockout is possible. SX wiring is low voltage; routing the cables alongside power wires, motor/servo wires, or other high voltage wiring may inject noise into the SX.

It is good wiring practice (and may be required by code) to isolate the SX cables from high-voltage wires, avoid routing cables close to noisy wiring.

IMPORTANT: The standard SXA cables are unshielded cables. If shielded cables are used, provide a good earth ground connection to the cordset shield.

4.2 Initial Electrical Connections

NOTE: The scanner's external power supply must be capable of bridging a brief power failure of 20 ms, as per IEC 60204-1.

© Banner Engineering Corp. All rights reserved.
www.bannerengineering.com

NOTE: A functional earth ground is available. See "Machine Interface Connections for the Stand-alone Models" on page 57, "Machine Interface Connections for the Master Models (8-pin)" on page 61, "Machine Interface Connections for the Master (12-pin)" on page 62, or "Machine Interface Connections for the Master (17-pin and 17+8-pin)" on page 65.The user can connect it or leave it floating to achieve in the application a best compliance with electromagnetic interferences.

Ensure that electrical power is not applied to the SX until told to do so. Do not connect any wires to the machine control circuits (i.e. OSSD outputs) at this time.

For initial power-up and checkout, connect as described (to find the pin numbers and wire colors, refer to the appropriate machine interface wiring section for the model of scanner being used):

- Power connections
- Reset and Zone Set inputs
- If EDM has been configured, it must be wired. Wire the OSSDs to the relays/contactors but do not wire the relay outputs to the machine. Wire the NC contacts to the EDM pin selected in the configuration.

After configuring the SX and performing the initial checkout procedure:

- Make the final connection of the OSSD and warning (if used) outputs
- Refer to the installation instructions of any interfacing device (i.e. UM-FA-9A/11A) for proper connection and checkout.

If used, connect the external reset switch to the reset wire of the machine interface cordset and to 24 V DC. See warning about the physical location of the reset switch in "Reset Switch Location" on page 42. The reset switch must be a normally open switch that is held closed for approximately 0.5 to 4 seconds, and then re-opened to accomplish the reset. The switch must be capable of switching 10 to 30 V DC at 30 mA.

If used, connect the area switch inputs to the configured pins. This must be done to verify each Zone Set.

4.3 Electrical Connections to the Guarded Machine

WARNING:

- **Risk of electric shock**
- Use extreme caution to avoid electrical shock. Serious injury or death could result.
- Always disconnect power from the safety system (for example, device, module, interfacing, etc.), guarded machine, and/or the machine being controlled before making any connections or replacing any component. Lockout/tagout procedures might be required. Refer to OSHA 29CFR1910.147, ANSI Z244-1, or the applicable standard for controlling hazardous energy.
- Make no more connections to the device or system than are described in this manual. Electrical installation and wiring must be made by a Qualified Person[8] and must comply with the applicable electrical standards and wiring codes, such as the NEC (National Electrical Code), NFPA 79, or IEC 60204-1, and all applicable local standards and codes.

Verify that power has been removed from the SX and the machine/vehicle to which it will connect. Make the electrical connections described as required by each individual application.

Lockout/tagout procedures may be required (refer to OSHA CFR 1910.147, ANSI Z244-1, or the appropriate standard for controlling hazardous energy). Follow relevant electrical standards and wiring codes, such as the NEC, NFPA79 or IEC 60204-1.

The connections for supply power, external reset (if used), external device monitoring (EDM) (if used), and Zone Set area switch inputs (if used) should already be connected. The SX must also have been configured, mounted and passed the initial checkout, as described in "Initial Checkout" on page 70.

The final connections to be made are:

- OSSD outputs
- Warning Auxiliary (if used)
- FSD/MPCE Interfacing

[8] A person who, by possession of a recognized degree or certificate of professional training, or who, by extensive knowledge, training and experience, has successfully demonstrated the ability to solve problems relating to the subject matter and work.

© Banner Engineering Corp. All rights reserved.
www.bannerengineering.com

- Mute Sensor inputs (if used)
- Mute Enable input (if used)
- Mute Lamp output (if used)
- Override input (if used)

4.3.1 Connecting the OSSD Outputs

Both halves of each pair of output signal switching device (OSSD) outputs must be connected to the machine control so that the machine's safety-related control system interrupts the circuit or power to the machine primary control element(s) (MPCE), resulting in a non-hazardous condition.

Final switching devices (FSDs) typically accomplish this when the OSSDs go to an OFF state. Refer to the output specifications and the warnings below before making OSSD output connections and interfacing the Scanner to the machine.



WARNING:

- **Interfacing both output signal switching devices (OSSD)**
- Failure to follow these instructions could result in serious injury or death.
- Unless the same degree of safety is maintained, never wire an intermediate device(s) (PLC, PES, PC) between the safety module outputs and the master stop control element it switches such that a failure causes a loss of the safety stop command or the failure allows the safety function to be suspended, overridden, or defeated.
- Connect both OSSD outputs to the machine control so that the machine's safety-related control system interrupts the circuit to the machine primary control element(s), resulting in a non-hazardous condition.

NOTE:

- **Properly interface the output signal switching devices (OSSD)**
- **Failure to properly interface the OSSD Outputs to the guarded machine could result in serious injury or death.**
- To ensure proper operation, the Banner device output parameters and machine input parameters must be considered when interfacing the Banner device OSSD outputs to machine inputs. Machine control circuitry must be designed so that the maximum load resistance value is not exceeded and that the maximum specified OSSD Off-state voltage does not result in an On condition.

4.3.2 Connecting the FSD Interfacing

Final switching devices (FSDs) can take many forms, although the most common are forced-guided, mechanically linked relays or an interface module. The mechanical linkage between the contacts allows the device to be monitored by the external device monitoring circuit for certain failures.

Depending on the application, the use of FSDs can facilitate controlling voltage and current that differs from the OSSD outputs of the SX. FSDs can also be used to control an additional number of hazards by creating multiple protective stop circuits.

Protective Stop (Safety Stop) Circuits

A protective stop allows for an orderly cessation of motion for safeguarding purposes, which results in the stopping of motion and removal of power from the MPCEs (assuming this does not create additional hazards). A protective stop circuit typically comprises a minimum of two normally open (N.O.) contacts from forced-guided, mechanically linked relays, which are monitored (via external device monitoring) to detect certain failures in order to prevent the loss of the safety function. Such a circuit can be described as a safe switching point.

Typically, protective stop circuits are either single-channel, which is a series connection of at least two N.O. contacts; or dual-channel, which is a separate connection of two N.O. contacts. In either method, the safety function relies on the use of redundant contacts to control a single hazard (if one contact fails ON, the second contact will arrest the hazard and prevent the next cycle from occurring).

The interfacing of the protective stop circuits must be accomplished so that the safety function cannot be suspended, overridden, or defeated, unless accomplished in a manner at the same or greater degree of safety as the machine's safety-related control system that includes the SX.

© Banner Engineering Corp. All rights reserved.

The normally open safety outputs from a safety module provide a series connection of redundant contacts that form protective stop circuits for use in either single-channel or dual-channel control.

Dual-Channel Control

Dual-channel control provides the ability to electrically extend the safe switching point beyond the FSD contacts. With proper monitoring, this method of interfacing is capable of detecting certain failures in the control wiring between the safety stop circuit and the MPCEs. These failures include a short circuit of one channel to a secondary source of energy or voltage, or the loss of the switching ability of one of the FSD outputs. Such failures could lead to the loss of redundancy — or to a complete loss of safety, if not detected and corrected.

The possibility of a failure to the wiring increases as the physical distance between the FSD safety stop circuits and the MPCEs increases, as the length or the routing of the interconnecting wires increases, or if the FSD safety stop circuits and the MPCEs are located in different enclosures. For this reason, dual-channel control with EDM monitoring should be used in any installation where the FSDs are located remotely from the MPCEs.

Single-Channel Control

Single-channel control uses a series connection of FSD contacts to form a safe switching point. After this point in the machine's safety-related control system, failures can occur that would result in the loss of the safety function (such as a short-circuit to a secondary source of energy or voltage).

For this reason, single-channel control interfacing should be used only in installations where FSD safety stop circuits and the MPCEs are mounted within the same control panel, adjacent to each other, and are directly connected to each other; or where the possibility of such a failure can be excluded. If this cannot be achieved, then dual-channel control should be used.

Methods to exclude the possibility of these failures include, but are not limited to:

- Physically separating interconnecting control wires from each other and from secondary sources of power.
- Routing interconnecting control wires in separate conduit, runs, or channels.
- Locating all elements (modules, switches, and devices under control) within one control panel, adjacent to each other, and directly connected with short wires.
- Properly installing multi-conductor cabling and multiple wires through strain relief fittings. (Over-tightening of a strain-relief can cause short-circuits at that point.)
- Using positive-opening or direct-drive components, installed and mounted in a positive mode.

4.3.3 Machine Primary Control Elements and External Device Monitoring

A machine primary control element (MPCE) is an "electrically powered element that directly controls the normal operation of a machine in such a way that it is the last element (in time) to function when machine operation is to be initiated or arrested" (per IEC61496-1). Examples include motor contactors, clutch/brakes, valves, and solenoids.

Depending on the level of risk of harm, it may be required to provide redundant MPCEs or other control devices that are capable of immediately stopping the dangerous machine motion, irrespective of the state of the other. These two machine control channels need not be identical (they could also be diverse redundant), but the stop time performance of the machine (Ts, used to calculate the safety distance, see "Minimum Safety (Separation) Distance Formula" on page 38) must take into account the slower of the two channels. See "Wiring Diagrams" on page 57.

To ensure that an accumulation of failures does not compromise the redundant control scheme (i.e., cause a failure to danger) a method to verify the normal functioning of MPCEs or other control devices is required. The **SX5-B** model provides this function only when configured for manual start/restart (reset) with MPCE monitoring contacts wired in series with the reset (start/restart) switch as shown in "Wiring Diagrams" on page 57 (see also "Reset Switch Location" on page 42). The master scanner models provide a convenient method for this verification: external device monitoring (EDM).

When the **SX5-B** scanner model is configured for Automatic Start/Restart (Reset) or a master or **SX5-B6** scanner is not configured for external device monitoring (EDM), to properly monitor the MPCEs, an External Device Monitoring (EDM) function must be provided from outside the scanner. One example using the **UM-FA-9A/-11A** safety module is shown in "Wiring Diagrams" on page 57. The **UM-FA-9A/-11A** can be configured for both manual or automatic reset and provide the required EDM function.

For external device monitoring to function properly, each device must include a normally closed (NC), forced-guided (mechanically linked) contact that can accurately reflect the status of the device. This ensures that the normally open contacts, used for controlling hazardous motion, have a positive relationship with the normally closed monitoring contacts and can detect a failure to danger (e.g. contacts that welded closed or stuck ON).

It is strongly recommended that a normally closed, forced-guided monitoring contact of each FSD and MPCE be connected to EDM inputs (see "Wiring Diagrams" on page 57). If this is done, proper operation will be verified. Monitoring FSD and MPCE contacts is one method of maintaining control reliability (OSHA/ANSI) and Category 3 and 4 (ISO13849-1).

© Banner Engineering Corp. All rights reserved.
www.bannerengineering.com

If monitoring contacts are not available or do not meet the design requirement of being forced-guided (mechanically linked), it is recommended to:

- Replace the devices so that they are capable of being monitored, or
- Incorporate the EDM function into the circuit as close to the MPCE as possible (e.g., monitor the FSDs), and
- Employ use of well-tried, tested, and robust components, and generally accepted safety principles, including fault exclusion, into the design and installation to either eliminate, or reduce to an acceptable (minimal) level of risk, the possibility of undetected faults or failures that can result in the loss of the safety function.

The principle of fault exclusion allows the designer to design out the possibility of various failures and justify it through the risk assessment process to meet the required level of safety performance, such as the requirements of Category 2, 3 or 4. See ISO 13849-1/-2 for further information.

WARNING:

- Notice Regarding MPCEs
- Failure to follow these instructions could result in serious injury or death.
- Each of the machine primary control elements (MPCE1 and MPCE2) must be capable of immediately stopping the dangerous machine motion, regardless of the state of the other. The two machine control channels need not be identical, but the machine's stop time performance (TS, used to calculate separation distance) must be based on the slower of the two channels.

WARNING:

- **External Device Monitoring (EDM)**
- Creating a hazardous situation could result in serious injury or death.
- If the system is configured for “no monitoring,” it is the user’s responsibility to ensure this does not create a hazardous situation.

4.3.4 SX5 and External Device Monitoring (EDM)

The SX5 scanners provide two possible EDM configurations (except the SX5-B, which does not perform the EDM function): 1-channel monitoring and no monitoring. The most common form of EDM is 1-channel monitoring. Its primary advantage is the simplicity of wiring.

Figure 37. 1-Channel EDM status, with respect to safety output

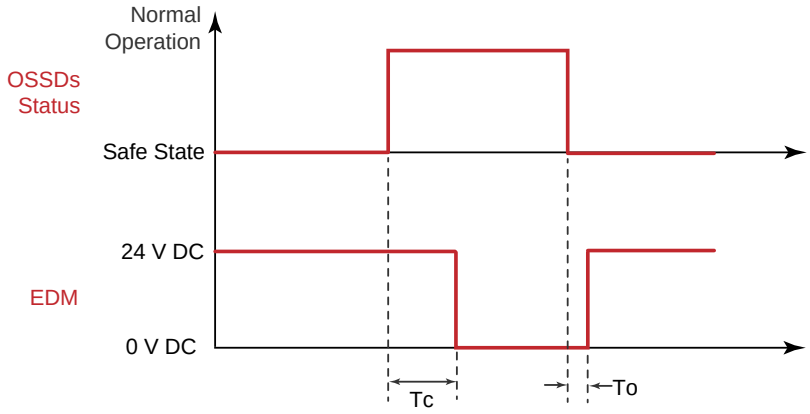

Tc ≤ 350 ms (time between OSSD off-on transition and EDM Test

To ≥ 100 ms (time between OSSD on-off transition and EDM Test

One-Channel Monitoring is a series connection of normally closed monitor contacts that are force-guided (mechanically linked) from each device controlled by the SX5. The monitor contacts must be closed before the SX5 OSSDs can turn on. After the OSSDs turn on, the monitor contacts must open within the time Tc software setting. The monitor contacts must be closed within 100 ms (time To) of the OSSD output going from on to off.

Use the **No Monitoring** configuration if the application does not require the SX5 to perform the EDM function. It is the user’s responsibility to ensure that this configuration does not create a hazardous situation.

© Banner Engineering Corp. All rights reserved.
www.bannerengineering.com

Use the **Input Configuration** screen of the configuration software to set SX5 EDM configuration.

4.3.5 Warning (Auxiliary) Output

The stand-alone scanner can have pins 1, 3, or 4 set as a Warning Output(s). One warning output can be selected when one or two zone sets are configured. Two warning outputs can be selected when one zone set with one safety zone and two warning zones is configured. These outputs provide a PNP current-souring output (250 mA maximum) that switches ON when the defined and active warning field is cleared and switches OFF when the active warning field is interrupted.

The master or **SX5-B6** scanners can have 1 or 2 Warning Outputs assigned (depending on connector selected, 8 pin can only have 1 output). These outputs can be assigned to pins or not. The state of the output can also be assigned: **on low** will turn the output on when the warning field is clear and **on high** will turn the output on when the warning field is blocked.

4.3.6 Alarm Output (All Models Except SX5-B)

These alarm outputs apply to all scanner models except the **SX5-B** model.

One or two alarm outputs can be assigned. These outputs can be assigned to pins for a PNP output.

Enabling Alarm 1 will send a signal when the CLEANW2 warning turns on, signifying that the window needs to be cleaned (outputs still on).

Enabling Alarm 2 will send a signal when any device fault has turned the outputs off.

4.3.7 Preparing for System Operation

After the initial trip test has been performed (see "Perform a Trip Test" on page 71), and the OSSD safety output connections have been made to the machine to be controlled, the SX is ready for testing in combination with the guarded machine.

The operation of the SX with the guarded machine must be verified before the combined SX and machine may be put into service. To do this, a Qualified Person must perform the Commissioning Checkout Procedure described in "Checkout Procedures" on page 110.

For the SX5-B6 and master model, the Warning and Alarm outputs can be accessed via the Ethernet connection instead of hardwired.

4.4 Wiring Diagrams

4.4.1 Machine Interface Connections for the Stand-alone Models

All connections are made using the 4-pin M12 connector on the front of the unit and the 8-pin M12 pigtail on the back of the unit. Ensure that the dust cover is re-installed on the 4-pin M12 connector when the communication cable is not installed.

Figure 38. SX Series Safety Laser Scanner

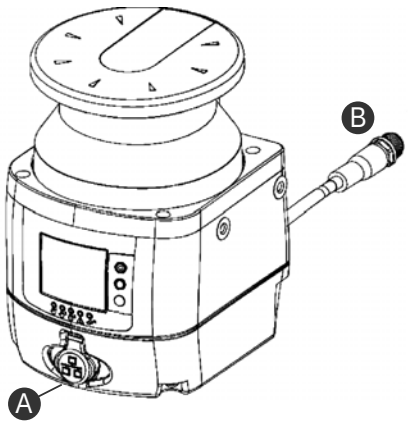

A. 4-pin M12 connector on the front (for PC Ethernet connection)

B. Short cable with an 8-pin M12 connection in the back (for machine interface)

The stand-alone models have one OSSD pair and include three configuration signals. These signals allow the user to configure the scanner with different functions:

- Signaling when a person or an object is in a Warning Zone

© Banner Engineering Corp. All rights reserved.
www.bannerengineering.com

- Switching the detection areas using external signals (Area Switch)
- Restarting the device using a Manual reset (restart) and restoring the device after a fault condition (reset)
- Muting the whole safety area and the single-line pattern mute-dependent override
- Signaling when the scanner has entered an alarm condition

Type	Signal	Color	Description	Pin	
Power	Power supply	Brown	24 V DC	2	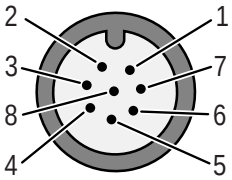
	GND_ISO	Blue	0 V	7	
Input/Output	Multi in/out	Green	Software selectable	3	
		Yellow		4	
		White		1	
Safety output	OSSD 1/1	Gray	Safety output	5	
	OSSD 1/2`	Pink		6	
Other	F_EARTH	Red	Functional Earth	8	

The Multi in/out pins can be configured either as an input or an output.

Signal	Function	Connection
Multi In	Restart/Reset	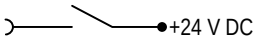
	Area switch	
	Override (single line pattern)	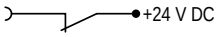
	Muting 1 Muting 2	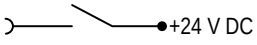
	Muting Enable	
Multi Out	Warning	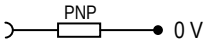
	Alarm	
	Muting Lamp	
OSSD	OSSD 1/1 OSSD 1/2	

© Banner Engineering Corp. All rights reserved.
www.bannerengineering.com

Wiring with Redundant FSD Inputs

Figure 39. Wiring with redundant FSD inputs

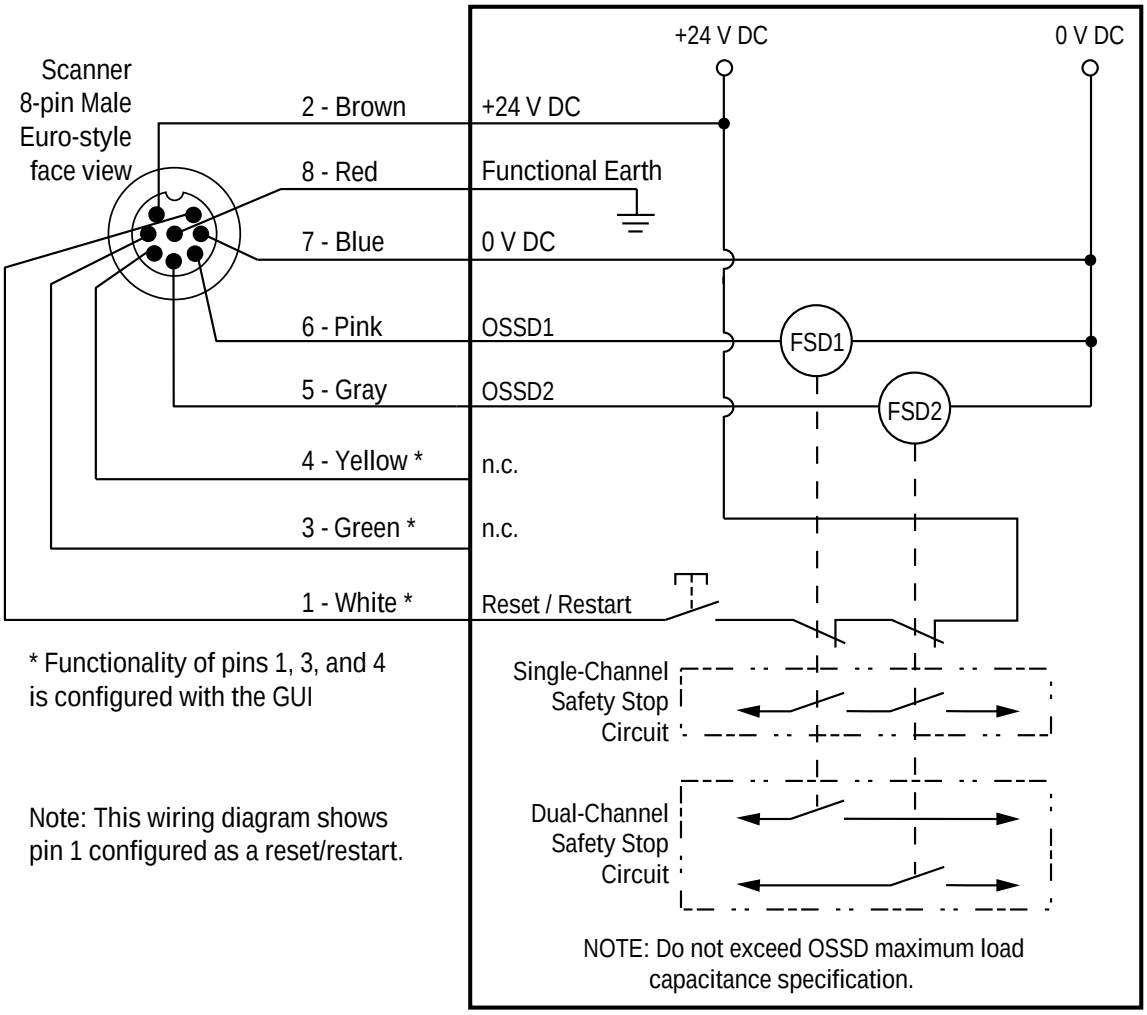

Monitoring FSDs—FSDs must be monitored for proper operation. On the SX5-B, one-channel EDM can only be used when the scanner is configured for manual reset.

© Banner Engineering Corp. All rights reserved.
www.bannerengineering.com

Wiring Using a UM Module

Figure 40. Wiring using a UM module

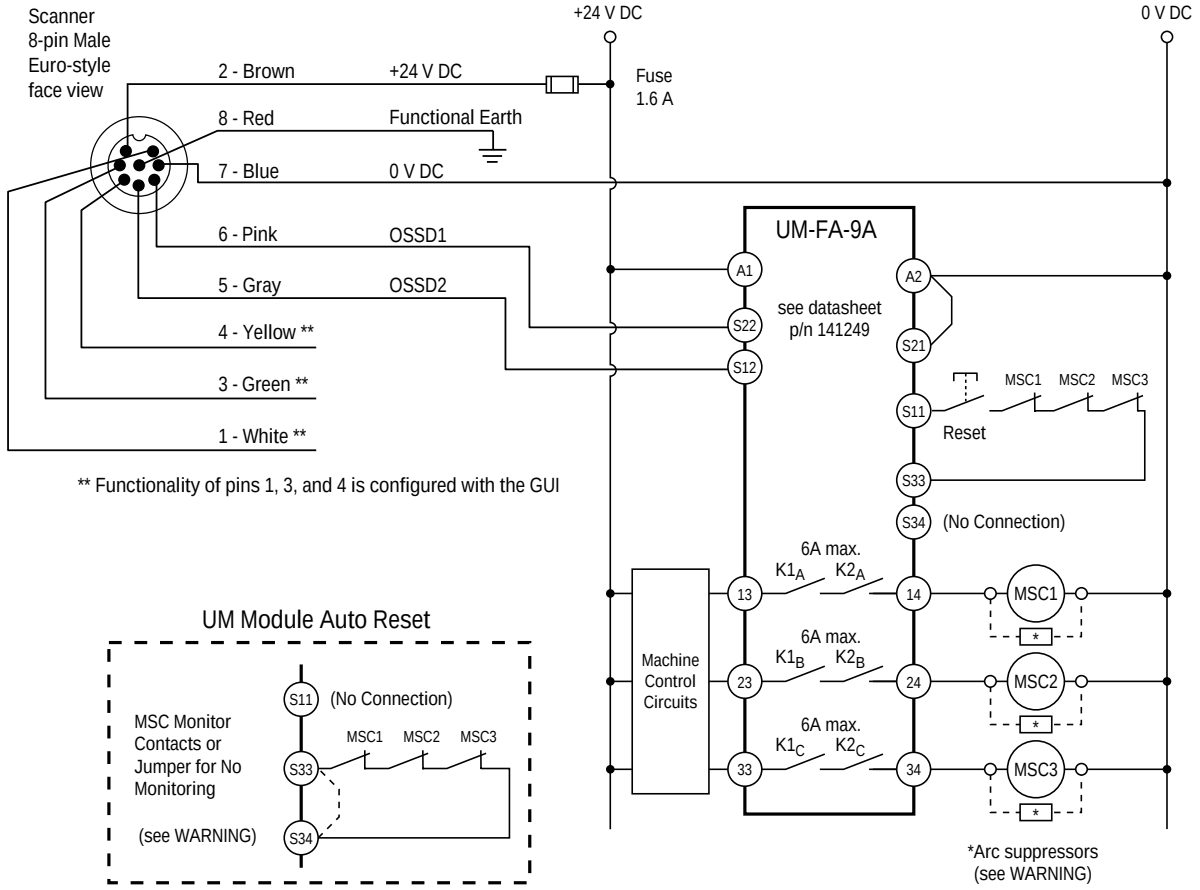

WARNING:

- **Properly install arc or transient suppressors**
- Failure to follow these instructions could result in serious injury or death.
- Install any suppressors as shown across the coils of the machine primary control elements. Do not install suppressors directly across the output contacts of the safety or interface module. In such a configuration, it is possible for suppressors to fail as a short circuit.

© Banner Engineering Corp. All rights reserved.
www.bannerengineering.com

Wiring to a Safety Controller

Figure 41. Wiring to a Safety Controller

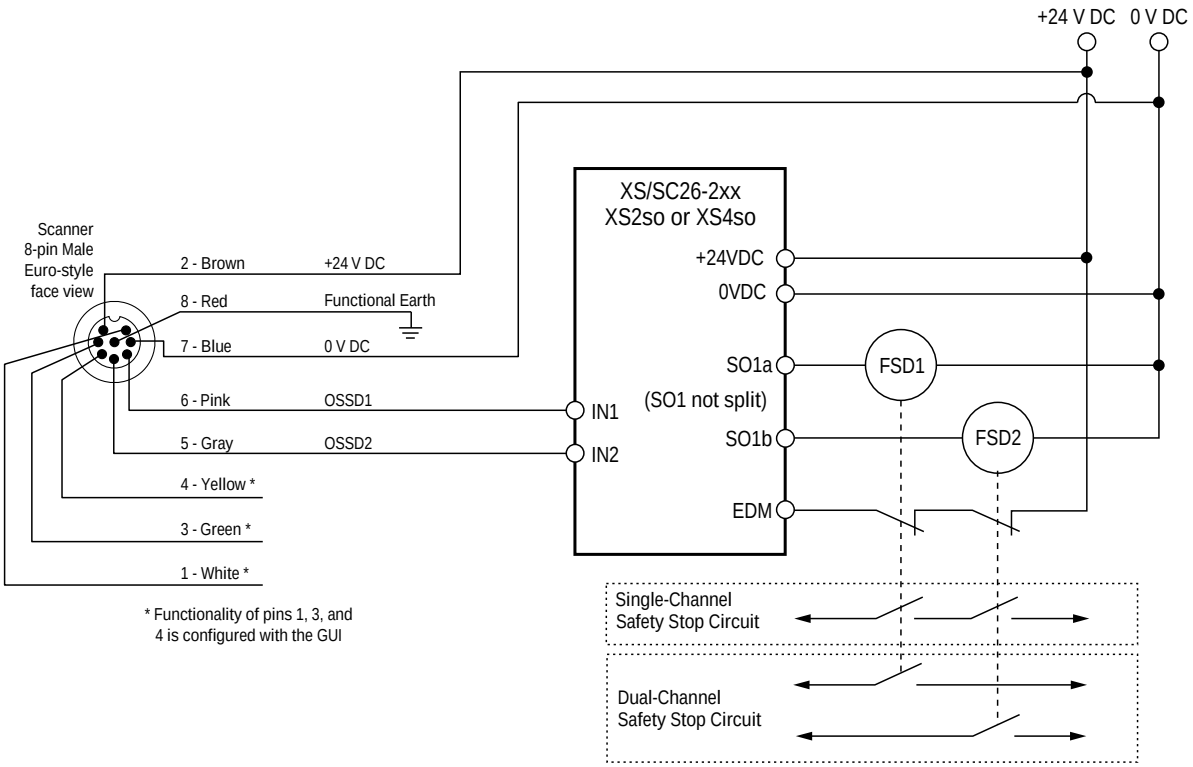

4.4.2 Machine Interface Connections for the Master Models (8-pin)

The M10 master models wired with the 8-pin female connector have one OSSD pair and include three configurable signals. These three pins are very similar to the stand-alone models except two of the signals act only as inputs. The third can act as an input or an output.

Type	Signal	Pin	Color	Description	8-pin Male Pinout
Power	Power Supply	2	Brown	24 V DC	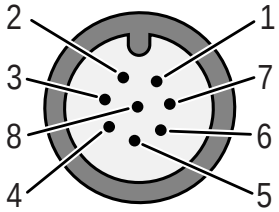
	GND_ISO	7	Blue	0 V DC	
Input	Multi in	3	Green	Software Selectable	
		4	Yellow		
Input/Output	Multi in/out	1	White	Software Selectable	
Safety Output	OSSD 1/1	5	Gray	Safety Output	
	OSSD 1/2	6	Pink		
Other	F_Earth	8	Red	Functional Earth	

The Multi-in pins can be configured as inputs. The Multi in/out pin can be configured either as an input or an output.

Signal	Function	Connection
Multi In	Restart/Reset	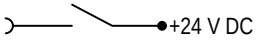
	Area switch	
	Override (single line pattern)	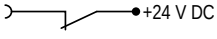
	Muting 1 Muting 2	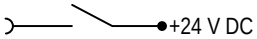
	Muting Enable	
Multi Out	Warning	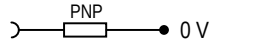
	Alarm	

Continued on page 62

© Banner Engineering Corp. All rights reserved.
www.bannerengineering.com

Continued from page 61

Signal	Function	Connection
	Muting Lamp	
OSSD	OSSD 1/1 OSSD 1/2	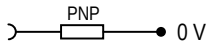

See "Machine Interface Connections for the Stand-alone Models" on page 57.

4.4.3 Machine Interface Connections for the Master (12-pin)

The M10 Master models wired with the 12-pin connector can be configured for one or two OSSD pairs and include five configurable signals. These five signals allow the user to configure the scanner with different functions. One pin acts only as an input. The other four pins can act as an input or an output.

Type	Signal	Pin	Color	Description	12-pin Male Pinout
Power	Power supply	1	Brown	24 V DC	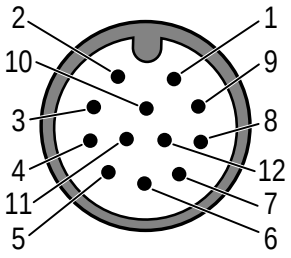
		4	Green		
	GND_ISO	2	Blue	0 V DC	
		6	Yellow		
Input	Multi in	3	White	Software Selectable	
Input/Output	Multi in/out	7	Black	Software Selectable	
		9	Red		
		10	Violet		
		11	Gray/Pink		
Safety Output	OSSD 1/1	8	Gray	Safety Output	
	OSSD 1/2	5	Pink		
Other	F_Earth	12	Red/Blue	Functional Earth	

NOTE: In configurations with remote scanners, both POWER SUPPLY and GND_ISO wires must be connected. It is recommended to always connect both sets of wires.

The Multi-in pins can be configured as inputs while the Multi in/out pins can be configured either as an input or an output. The functionality that the Multi in and Multi In/Out can be configured as are as follows:

Type	Function	Description	Circuit
Multi in	RESTART	Restarts the device following OSSD off-status	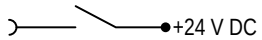
	RESET	Restores the device after a fault condition (like a power cycle)	
	RESTART 1/RESET	Restarts or restores the device	
	AREA SWITCH 1	Switches the detection areas by employing external signals	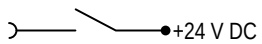
	AREA SWITCH 2		
	AREA SWITCH 3		
	AREA SWITCH 4		
	AREA SWITCH 5		
	Muting Enable 1	If high the muting feature is enabled and is allowed to be performed	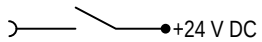
	Muting 11	Initiate the muting function if engaged with the proper timing	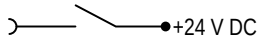
	Muting 12		
	EDM 1	External Device monitoring input for OSSD 1 and/or OSSD 2	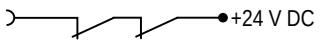
	EDM 2		

Continued on page 63

© Banner Engineering Corp. All rights reserved.
www.bannerengineering.com

Continued from page 62

Type	Function	Description	Circuit
	Override (single line pattern)	Forces scanner OSSDs on	+24 V DC
Multi out	Muting Lamp 1	Active muting function signal, supplies 24 VDC to LED lamp	0 V
	Warning 1	Output to signal an interruption of a warning field	PNP, 0 V
	Warning 2		
	Alarm 1	Clean window (CLEANW2 code)	PNP, 0 V
	Alarm 2	Scanner fault (OSSDs off)	
	Alarm 3	Override on	
	Safety Output	OSSD 2/1 (must be pin 9 or 10)	PNP, 0 V
		OSSD 2/2 (must be pin 9 or 10)	
	No Function	Not used	

NOTE: The second set of OSSDs are aligned to the main outputs OSSD1/1 and OSSD1/2 (which are not configurable) requirements. When a Multi Out pin is selected, a second pin will automatically be configured (per IEC 61496 requirements). This ensures that two Multi Out outputs are used for the same purpose.

Wiring Diagrams for the 12-pin Models

Figure 42. Generic 12-pin wiring to a Safety Controller

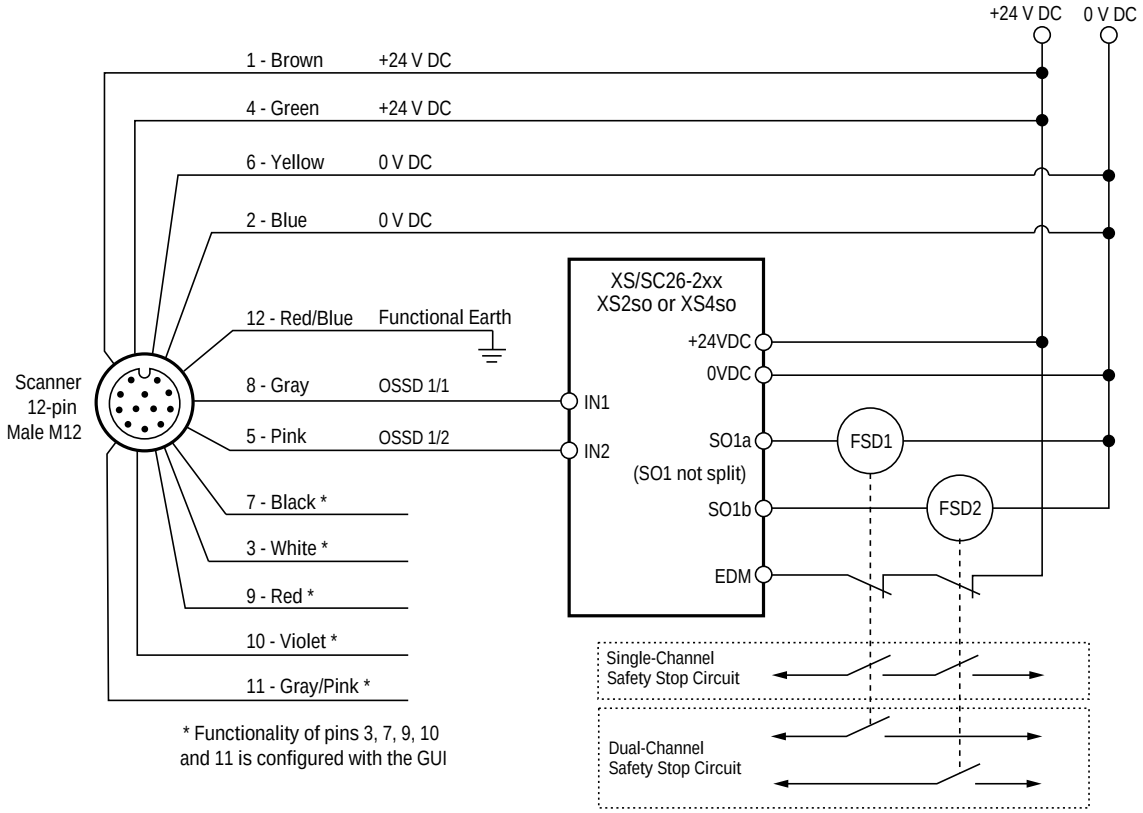

© Banner Engineering Corp. All rights reserved.
www.bannerengineering.com

Figure 43. Generic 12-pin wiring to an interface module (IM-)

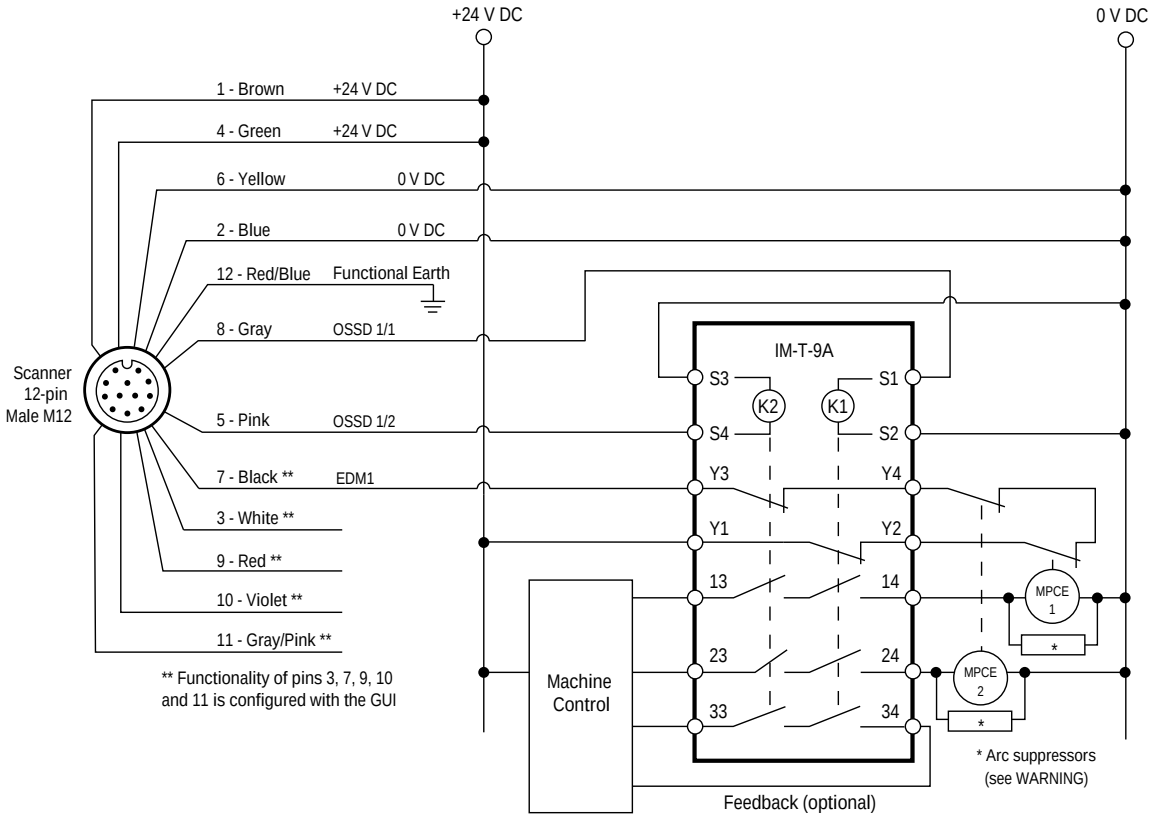

WARNING:

- **Properly install arc or transient suppressors**
- Failure to follow these instructions could result in serious injury or death.
- Install any suppressors as shown across the coils of the machine primary control elements. Do not install suppressors directly across the output contacts of the safety or interface module. In such a configuration, it is possible for suppressors to fail as a short circuit.

© Banner Engineering Corp. All rights reserved.
www.bannerengineering.com

Figure 44. Generic 12-pin wiring to an FSD

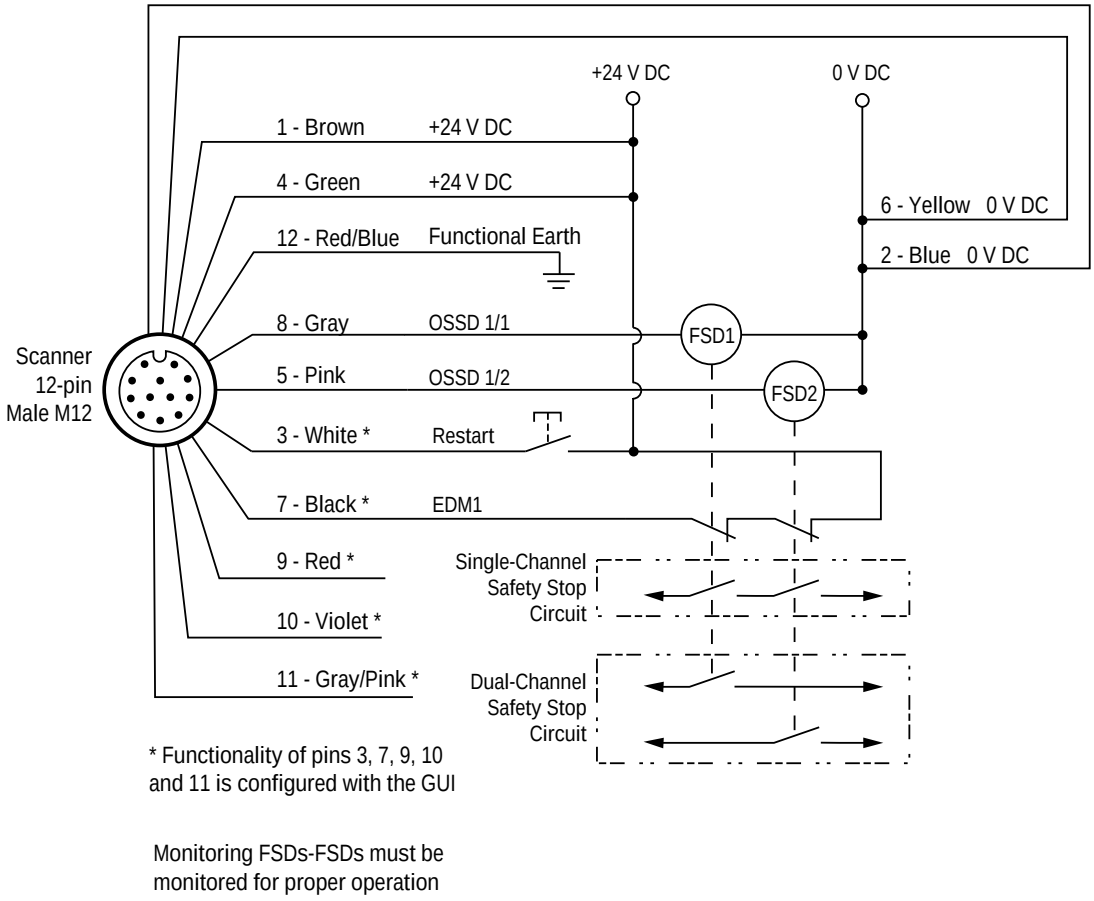

4.4.4 Machine Interface Connections for the Master (17-pin and 17+8-pin)

The M70 Master models wired with the 17-pin connector can be configured for one, two, or three OSSD pairs and include eight configurable signals. These eight signals allow the user to configure the scanner with different functions. Four pins act only as an input. Two pins act only as outputs. The other two pins can act as an input or an output.

Type	Signal	Pin	Color	Description	17-pin Male Pinout
Power	Power Supply	1	Brown	24 V DC	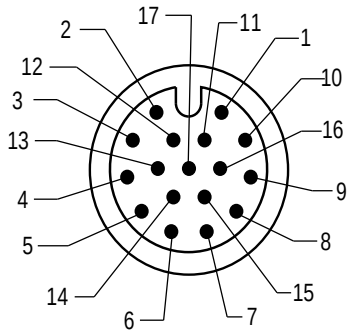
		10	White/yellow		
		11	Gray/pink		
	GND_ISO	2	Blue	0 V DC	
		3	White/green		
		12	Red/blue		
Input	Multi in	14	White	Software Selectable	
		7	Black		
		6	Orange		
		17	Violet		
Output	Multi out	4	Green	Software Selectable	
		15	Yellow		
Input/Output	Multi in/out	5	White/black	Software Selectable	
		9	Red		
Safety Output	OSSD 1/1	13	Gray	Safety Output	
	OSSD 1/2	8	Pink		
Other	F_Earth	16	Yellow/green	Functional Earth	

© Banner Engineering Corp. All rights reserved.
www.bannerengineering.com

NOTE: In configurations with remote scanners, all POWER SUPPLY and GND_ISO wires must be connected. It is highly recommended to always connect all POWER SUPPLY and GND_ISO wires.

The Multi-in pins can be configured as inputs, the multi-out pins can be configured as outputs, and the Multi-in/out pins can be configured either as an input or an output.

Adding the 8-pin connector to the M70 Master models wired with the 17-pin connector adds 8 more configurable inputs to the system (for a total of 12 pins for inputs, 2 pins output only and 2 pins that are inputs or outputs).

Type	Signal	Pin	Color	Description	8-pin Male Pinout
High-Speed Input	Multi-in high-speed	5	Gray	Encoder inputs, Software Selectable	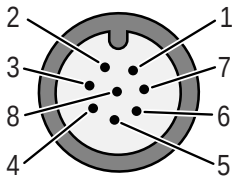
		6	Pink		
		4	Yellow		
		8	Red		
Input	Multi in	3	Green	Software Selectable	
		7	Blue		
		2	Brown		
		1	White		

Type	Function	Description	Circuit
Multi in	RESTART 1	Restarts the device following OSSD 1 off-status	
	RESTART 2	Restarts the device following OSSD 2 off-status	
	RESET	Restores the device after a fault condition (like a power cycle)	
	RESTART 1/RESET	Restarts or restores the device	
	RESTART 2/RESET		
	RESTART 1/RESET/EDM 1	Restarts or restores the device, and performs external device monitoring function	
	RESTART 2/RESET/EDM 2		
	SHUT OFF	Enables the shut off function	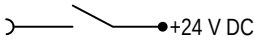
	AREA SWITCH 1	Switches the detection areas by employing external signals	
	AREA SWITCH 2		
	AREA SWITCH 3		
	AREA SWITCH 4		
	AREA SWITCH 5		
	AREA SWITCH 6		
	AREA SWITCH 7		
	AREA SWITCH 8		
	Muting Enable 1	If high the muting feature is enabled and is allowed to be performed	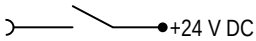
	Muting Enable 2		
	Muting 11	Initiate the muting function if engaged with the proper timing	
	Muting 12		
	Muting 21		
	Muting 22		
	Override 11 (Pulsed)	Forces appropriate OSSD outputs on (either pulsed signal or level input)	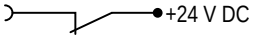
	Override 11 (Level)		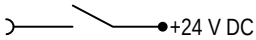
	Override 12 (Level)		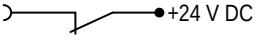
	Override 21 (Pulsed)		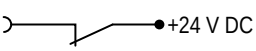
	Override 21 (Level)		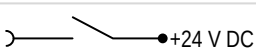

Continued on page 67

© Banner Engineering Corp. All rights reserved.
www.bannerengineering.com

Continued from page 66

Type	Function	Description	Circuit
	Override 22 (Level)		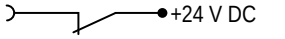
	EDM 1	External Device monitoring input for OSSD 1 and/or OSSD 2	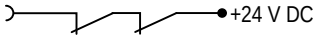
	EDM 2		
Multi in High Speed	Encoder 11	Enables the encoder function ; Both couples are automatically activated	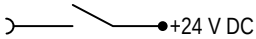
	Encoder 12		
	Encoder 21		
	Encoder 22		
Multi out	Muting Lamp 1	Active muting function signal, supplies 24 V DC to LED lamp	
	Muting Lamp 2		
	Warning 1	Output to signal an interruption of a warning field	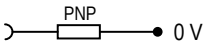
	Warning 2		
	Alarm 1	Clean window (CLEANW2 code)	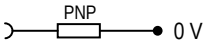
	Alarm 2	Scanner fault (OSSDs off)	
	Override Status	Override on	
	Safety Output	OSSD 2/1 or 3/1	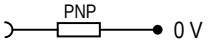
		OSSD 2/2 or 3/2	
	No Function	Not used	

NOTE:

- The additional OSSDs are aligned to the main outputs OSSD1/1 and OSSD1/2 (which are not configurable) requirements. When a Multi-out pin is selected, a second pin will automatically be configured (per IEC 61496 requirements). This ensures that two Multi-out outputs are used for the same purpose.
- OSSD 2 must be pins 4 and 15. OSSD 3 must be pins 5 and 9.

4.4.5 Remote Scanner Connections (8-pin)

To create a scanner network, remote scanners must be attached to the master. The remote scanners are equipped with rotatable side connectors for the input and output connection. Data and power are received from the previous scanner via these connectors. The remote can also send data and power to the next remote via these connectors.

NOTE: It is possible to connect from one to a maximum of three scanners at a time, which produces a chain of four devices counting the master. Use 8-pin double ended (male to male) cables to connect remote devices.

Figure 45. Bottom view of SX5-M/ME/R scanner



© Banner Engineering Corp. All rights reserved.
www.bannerengineering.com

Table 1. Remote scanner's internal signals

Input Port	Output Port	Pin	8-pin Male Pinout
V_{pwr}	V_{pwr}	1	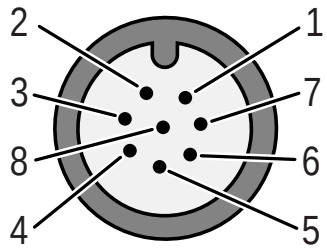
V_{pwr}	V_{pwr}	7	
I_TX+	O_TX+	6	
I_RX+	O_RX+	5	
I_TX-	O_TX-	4	
I_RX-	O_RX-	8	
GND_ISO	GND_ISO	2	
GND_ISO	GND_ISO	3	

To configure a remote scanner, it must be connected to the master and the master must be connected to the computer on which the configuration software is installed. Before connecting the master scanner to power and/or the computer, verify the remote devices are connected in the correct order (match the configuration).

CAUTION: The power to all the scanners should be switched OFF during the connection process. By supplying power to the Master, all the connected remote devices will be powered automatically.

Figure 46. Master to Remote Connection

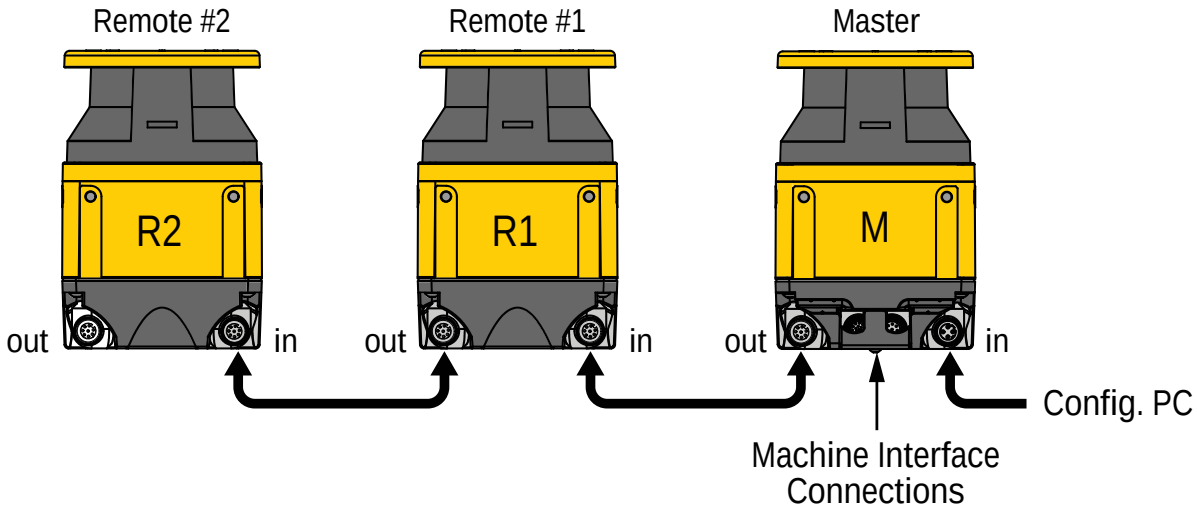

CAUTION: Do not reverse the connections; it may cause malfunctions.

NOTE: Labels on the rotation connectors help identify the in and out connectors.

4.5 Power Supply and PC Connections

All power connections to the Laser Scanner must strictly comply with standard regulations.

The scanner requires a 24 V DC power supply voltage. Power must be supplied in accordance with SELV/PELV per IEC 60204-1 for all the devices electrically connected to the Safety Laser Scanner. Ensure that the scanner is provided with appropriate electrical fuse protection and ensure that the functional earth system is the same for all the devices connected to the Laser Scanner.

NOTE: The safety laser scanner's external power supply must be capable of bridging a brief power failure of 20 ms, as required by IEC 60204-1.

© Banner Engineering Corp. All rights reserved.
www.bannerengineering.com

NOTE: A functional earth connection is available on all models. This functional earth connection can be connected or left floating to achieve the best compliance with electromagnetic interferences for the application.

Connect the Laser Scanner to a PC for configuration and/or monitoring. The user must create an Ethernet network between the two devices by employing M12 to RJ45 cables. For more information, see "Cordsets" on page 124 and "Configuration Instructions" on page 74.

NOTE: The scanner must be powered off during any connection operation. Power up the scanner after connecting it to the computer for configuration.

NOTE: During configuration, the scanner works using its previously saved configuration.

© Banner Engineering Corp. All rights reserved.
www.bannerengineering.com

Chapter Contents

5.1 Apply Initial Power and Configure the SX Scanner System 70
5.2 Verify the Optical Field (Initial Verification) 70
5.3 Perform a Trip Test 71

Chapter 5 Initial Checkout

The initial checkout procedure must be performed by a Qualified Person, and must be performed only after configuring the System and after connections are made.

Initial checkout is performed on two occasions:

1. To ensure proper installation when the System is first installed, and
2. To ensure proper System function whenever any maintenance or modification is performed on the System or on the machinery being guarded by the System.

For the initial checkout, the SX system must be checked without power being available to the guarded machine.

Final interface connections to the guarded machine cannot take place until the SX system has been checked out. This may require lockout/tagout procedures (refer to OSHA1910.147, ANSI Z244-1, or the appropriate standard for controlling hazardous energy). These connections will be made after the initial checkout procedure has been successfully completed.

5.1 Apply Initial Power and Configure the SX Scanner System

Verify:

- Power has been removed from (or is not available to) the guarded machine, its controls, or actuators;
- The machine control circuit or the safety module is not connected to the OSSD outputs at this time (permanent connections will be made later);
- The Ethernet cable (4-pin M12 to RJ45 cable) is connected to the SX's 4-pin Ethernet connector (if not previously accomplished) and connect the RJ45 to the PC ethernet port.

1. On the computer, launch the configuration software.
2. Apply power to the SX system.
3. If not previously completed, configure the SX system as described in "Configuration Instructions" on page 74.

   The scanner must be powered off during any connection operation. During configuration, the scanner will be working using its previously saved configuration. Follow all the safety instructions.
4. Optional: Status information can be uploaded (Monitoring) or you can download the configuration to the scanner (Programming).

5.2 Verify the Optical Field (Initial Verification)

The following is the typical display indication, assuming a Warning Zone is configured.

Status	OSSD Output	Warning Aux Output	
Safety and Warning Zones clear	On	On Low: On On High: Off	

Continued on page 71

© Banner Engineering Corp. All rights reserved.
www.bannerengineering.com

Continued from page 70

Status	OSSD Output	Warning Aux Output	
Safety Zone clear, Warning Zone interrupted	On	On Low: Off On High: On	
Safety and Warning Zones interrupted	Off	On Low: Off On High: On	
Warning and Safety Zone is clear, waiting for reset	Off	On Low: On On High: Off	

If the display background is white instead of black (and the OSSDs are off) the configuration has been sent to the system but not accepted.

1. Inspect nearby areas for lights and retro-reflective surfaces.
   - If found, attempt to remove, cover, or otherwise prevent the item from being located in the scanner's detection plane.
   - If you are unable to do this, ensure the appropriate distance has been added to the separation distance (see Z_{amb} light factors in "Minimum Safety (Separation) Distance Formula" on page 38).
2. Inspect the installation for unmonitored areas and adjacent scanners.
3. In Run mode, observe the scanner's status display to determine status. If any other indication is shown on the display, see "Diagnostic Notes, Warnings, and Errors" on page 115.
4. Ensure that the scanner is in the Run mode, the Safety and Warning Zones are clear of intrusions, and the scanner's display shows the Zones are clear (or clear and waiting for a reset).
5. Perform a Trip Test to verify the Safety and Warning Zones.

5.3 Perform a Trip Test

Performing a trip test verifies the Safety and Warning Zone fields.

CAUTION: Ensure that no individuals are exposed to any hazard while verifying the Safety and Warning Zones.

NOTE: Although the GUI can assist in monitoring the position of objects and the status of the Safety and Warning Zones, use the display, when possible, to determine whether or not a zone has been interrupted.

1. Ensure that the SX system is in Run mode, the Safety and Warning Zones are clear of intrusions, and the display shows one of the following:



Zones are clear; OSSDs are on



Zones are clear; waiting for a reset input

© Banner Engineering Corp. All rights reserved.
www.bannerengineering.com

2. If a Warning Zone is used and with the guarded machine at rest:
    a. Use a test piece that matches the resolution selected for the scanner to interrupt the Warning Zone perimeter.
    b. Verify the display shows the yellow warning indication.
    c. Remove the test piece and verify the warning indicator returns to the status shown in step 1.
    d. Repeat this test along the entire Warning Zone perimeter, paying special attention to needle- and cone-shaped areas.

Figure 47. Yellow warning indication



3. Use the test piece to interrupt the perimeter of the Safety Zone.

Figure 48. The display when a test piece interrupts the Safety Zone



4. Remove the test piece and verify the display returns to the green Go display shown in step 1.
5. Repeat this test along the entire Safety Zone perimeter and verify that the configured zone:
    - Responds to the intrusion of the test piece.
    - Has no unmonitored areas as described in "Unmonitored Areas" on page 29.
    - Complies with the Safety Distance calculated in "Minimum Safety (Separation) Distance Formula" on page 38.

    Pay special attention at needle- and cone-shaped areas.
6. For stationary applications, verify that the marking of the perimeter of the Safey Zone on the floor corresponds with the status of the display. If the floor has not been marked, do so now, with the aid of the display response.
7. Verify the height of the Safety Zone at the perimeter is at the expected level (for example, 150 mm for mobile applications):
    - Safety Zones of 180 ° to 275°—Verify the height in at least four locations, approximately 90° apart from each other.
    - Safety Zones of 90° to 180°—Verify the height in at least three locations, approximately 90° apart from each other.
    - Safety Zones of 90° or less—Verify the height in at least two locations, approximately 90° apart from each other

Figure 49. Safety Zone angles and locations for verification

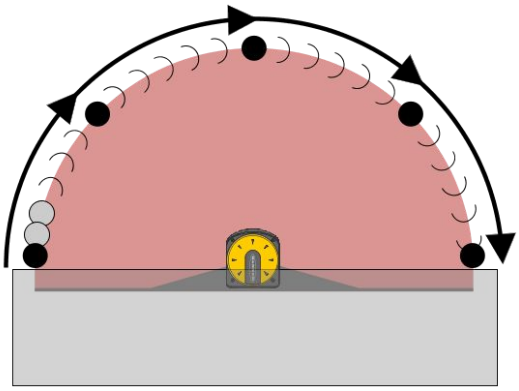

Figure 50. Safety Zone height

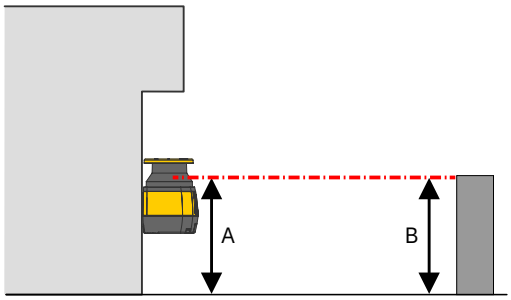

8. If Zone Set switchover is used, repeat steps 1 through 7 for each Zone Set that has been configured. Ensure all fields correspond to the expected fields as determined by the risk assessment. **If not, do not continue until the situation is corrected.**
9. If remote scanners are part of the configuration, repeat steps 1 through 8 for each Zone Set of each remote scanner that has been configured. Ensure all fields correspond to the expected fields as determined by the risk assessment. If not, do not continue until the situation is corrected.

© Banner Engineering Corp. All rights reserved.
www.bannerengineering.com

10. After all corrections and changes to the configuration and the Safety and Warning Zones have been verified, proceed to Electrical Interface to the Guarded Machine.

WARNING:
- **Trip test failure**
- Using a system that has failed a trip test can result in serious bodily injury or death. If the trip test has failed, the system might not stop dangerous machine motion when a person or object enters the sensing field.
- Do not attempt to use the system if the system does not respond properly to the trip test.

Other checks to carry out include:
- Performing system checkouts to ensure continued reliable operation. Banner Engineering highly recommends performing the system checkouts as described in the checkout procedures. However, a Qualified Person should evaluate these recommendations, based on the specific application and the results of a machine risk assessment, to determine the appropriate content and frequency of checkouts.
- Designing the Safety Zone so that the approach towards any dangerous point of the machine can only be accessed by passing through the Safety Zone, and the distance that a person has to cover must be longer than the minimum safety distance.
- Ensuring a person is unable to remain between the Safety Zone and the dangerous parts of the machine undetected.
- Ensuring access to the dangerous areas of the machine is not possible from any unprotected area.
- Documenting safety checks in a traceable manner.
- Immediately shutting down the machine if the safety check session reveals hypothetical faults. The electrical and mechanical installation must be checked for further verifications by qualified personnel.

© Banner Engineering Corp. All rights reserved.
www.bannerengineering.com

Chapter Contents

6.1 System Configuration Settings 74
6.2 Muting Functions 75
6.3 Encoder Functions 82
6.4 Install the Configuration Software 85
6.5 Software Interface 85
6.6 Using the Software 87
6.7 Print the Safety System Report 106
6.8 Change the Password 106
6.9 Reset the Password 107
6.10 Configure a Static IP Address 107
6.11 Perform a Factory Reset 107

Chapter 6 Configuration Instructions

6.1 System Configuration Settings

The Scanner must be configured by the user to satisfy the requirements of your application.

Use the SX's configuration software to establish the SX operating parameters. Download the configuration software from www.bannerengineering.com.

The software is the SX's configuration tool, providing several important advantages:

- Intuitive Graphical User Interface for rapid configuration
- Defined configuration directly stored in the device
- Discovery and IP address setting features to facilitate remote configuration
- Device Monitoring

The software can be used with a SX connected or offline (without a SX). A configuration can be saved and downloaded to a SX at a later time.

6.1.1 Response Time and Scan Cycle Setting

The response time of the scanner is the time from when an object enters the Safety Zone to when the OSSD goes to the OFF state. The scanner scans cyclically with a constant speed and it requires 30 ms to complete one rotation.

The minimum response time of the scanner is 62 ms, which is the time needed by the scanner to make two rotations (scans).

Select the number of scans (and therefore the response time) using the configuration software. The user may enter response times from 62 to 1202 ms (482 ms for the SX5-B model) in 30 ms increments by changing the number of scans from 2 to 40 (16 for the SX5-B model).

Adding remote scanners to the configuration affects the response time. Each remote scanner adds 10 ms to the response time for that scanner. A system with a Master and one remote scanner results is a best response time of 72 ms for the remote and 62 ms for the master.

Increase the number of scans if the scanner is operating in a dirty environment caused by floating dust particles (here the user may need to collect more data, experiment, to prevent inadvertent OSSD off signals from dust).



CAUTION: If the application requires changing the response time, the configuration may require changes to the Safety Zone (making it bigger) or changes in the scanner installation.

Default setting: 62 ms (2 scans)

6.1.2 Automatic or Manual Start/Restart

Depending on the number of zone sets being used in the configuration, the Qualified Person can select an Automatic Start/Restart (trip output) or a Manual Start/Restart (latch output). This setting determines if the SX enters Run mode automatically or if a manual reset is required first.

Select automatic or manual start/restart using the configuration software.

© Banner Engineering Corp. All rights reserved.
www.bannerengineering.com

If Automatic Start/Restart is selected, the OSSD outputs turn on after power is applied, and the SX passes its internal self-test and recognizes that the Safety Zone is clear. The OSSD outputs also turn on after the Safety zone clears following a blockage. When the SX is set for Automatic Start/Restart, other measures must be taken to prevent a pass-through hazard.

For mobile applications, ISO 3691-4 requires a two (2) second restart delay after the Safety Zone becomes clear before the OSSDs turn back on. This delay is meant to allow an individual to fully clear the area protected by the scanner. For mobile applications, set the Recovery Time for at least 2000 ms.

If Manual Start/Restart is selected, the SX requires a manual reset for the OSSD outputs to turn on when power is applied and the safety zone is clear. The manual Restart switch must be pressed for at least 500 ms.

WARNING:
- **Use of automatic (trip) or manual (latch) start/restart**
- Failure to follow these instructions could result in a serious injury or death.
- Applying power to the Banner Engineering Corp. device, clearing the defined area, or resetting a latch condition must not initiate dangerous machine motion. Design the machine control circuitry so that one or more initiation devices must be engaged to start the machine (a conscious act), in addition to the Banner Engineering Corp. device going into Run mode.

WARNING:
- **Start/Restart (Reset) Switch Location**
- Failure to follow these instructions could result in serious injury or death.
- The system Start/Restart (Reset) switch must be accessible only from outside, and in full view of, the hazardous area. Reset switches must also be out of reach from within the safeguarded space, and must be protected against unauthorized or inadvertent operation (via rings, guards, key or other means). If any areas are not visible from the reset switch, additional means of safeguarding must be provided.

6.2 Muting Functions

To mute the primary safeguard appropriately, the design of a muting system must:
- Identify the non-hazardous portion of the machine cycle.
- Select the proper muting devices.
- Include proper mounting and installation of those devices.

The SX Series Safety Laser Scanner is equipped with Integral Muting that can monitor and respond to redundant signals that initiate the mute. The mute automatically suspends the safeguarding function to allow an object to pass through the Safety Zone, without generating a stop command. The muting function allows the suspension of the entire Safety Zone (Total Muting) or just part of the Safety Zone (Partial Muting). The muting function can be activated for the safety zone controlling OSSD1 and/or OSSD2 (OSSD3 cannot be muted).

The mute may be triggered by a variety of external devices. This feature provides a variety of options to tailor the system to the requirements of a specific application. A pair of muting devices must be triggered within time selected in the configuration (the maximum delay between the activation of mute 1 and mute 2 can be set for one second to 16 seconds, with the default time being four seconds) of each other, but the order does not matter. The mute sensors cannot activate simultaneously. This reduces the chance of common mode failures or defeat.

NOTE: When a mute function is active, the zone set of that output cannot be changed. Changing during a mute cycle will result in an INPUTCF2 fault.

WARNING: Muting Limitations— Muting is allowed only during the non-hazardous portion of the machine cycle (ISO 13849-1 and ANSI B11.19). Muting at power up cannot be configured in this scanner.

© Banner Engineering Corp. All rights reserved.
www.bannerengineering.com

WARNING:

- **Muting Inputs Must Be Redundant**
- Failure to follow these instructions could result in serious injury or death.
- Do not use a single switch, device, or relay with two normally open (N.O.) contacts for the mute inputs. A single device, with multiple outputs, may fail so that the system is muted at an inappropriate time. This could result in a hazardous situation.

6.2.1 Mute Devices

The beginning and end of a mute cycle must be triggered by outputs from the muting devices, depending on the application.

The mute devices must either have normally open contacts or have PNP outputs, both of which fulfill the muting device requirements. These contacts must close (conduct) when the switch is actuated to initiate the mute and must open (non-conducting) when the switch is not actuated or in a power OFF condition.

The SX Series Safety Laser Scanner with Integral Muting monitors the mute devices to verify that their outputs turn on within the selected time of each other (order does not matter). If the inputs do not meet this simultaneity requirement, a mute condition will not occur. The mute devices must stay on (conducting) during the entire muting process.

The mute devices should be powered from the same power supply powering the scanner. Several types and combinations of mute devices can be used, including but not limited to: limit switches, photoelectric sensors, positive-driven switches, inductive proximity sensors, and 'whisker' switches.

6.2.2 Mute Device Requirements

The muting devices must, at a minimum, comply with the following requirements:

1. There must be a minimum of two independent hard-wired muting devices.
2. The muting devices must have one of the following: normally open contacts, PNP outputs (both of which must fulfill the input requirements listed in the Specifications), or a complementary switching action. At least one of these contacts must close when the switch is actuated, and must open (or not conduct) when the switch is not actuated or is in a power-off state.
3. The activation of the inputs to the muting function must come from separate sources. These sources must be mounted separately to prevent an unsafe muting condition resulting from misadjustment, misalignment, or a single common mode failure, such as physical damage to the mounting surface. Only one of these sources may pass through, or be affected by, a PLC or a similar device.
4. The muting devices must be installed so that they cannot be easily defeated or bypassed.
5. The muting devices must be mounted so that their physical position and alignment cannot be easily changed.
6. It must not be possible for environmental conditions, such as extreme airborne contamination, to initiate a mute condition.
7. The muting devices must not be set to use any delay or other timing functions unless such functions are accomplished so that no single component failure prevents the removal of the hazard, subsequent machine cycles are prevented until the failure is corrected, and no hazard is created by extending the muted period.

6.2.3 Examples of Muting Sensors and Switches

Photoelectric Sensors (Opposed Mode)

Opposed-mode sensors, which initiate the muted condition when the beam path is blocked, should be configured for dark operate (DO) and have open (non-conducting) output contacts in a power OFF condition. Both the emitter and receiver from each pair should be powered from the same source, to eliminate common mode failures.

Photoelectric Sensors (Polarized Retroreflective Mode)

The user must ensure that false proxing (activation due to shiny or reflective surfaces) is not possible. Banner LP sensors with linear polarization can greatly reduce or eliminate this effect.

Use a sensor configured for Light Operate (LO or N.O.) if initiating a mute when the retroreflective target or tape is detected (for example, home position). Use a sensor configured for Dark Operate (DO or N.C.) when a blocked beam path initiates the muted condition (for example, entry/exit). Both situations must have open (non-conducting) output contacts in a power OFF condition.

Positive-Opening Safety Switches

Two (or four) independent switches, each with a minimum of one closed safety contact to initiate the mute cycle, are typically used. *An application using a single switch with a single actuator and two closed contacts could result in an unsafe situation.*

© Banner Engineering Corp. All rights reserved.
www.bannerengineering.com

Inductive Proximity Sensors

Typically, inductive proximity sensors are used to initiate a muted cycle when a metal surface is detected. Due to excessive leakage current causing false ON conditions, two-wire sensors are not to be used. Only three- or four-wire sensors that have discrete PNP or hard-contact outputs that are separate from the input power can be used.

NOTE: Typical Entry/Exit is Dark Operate (DO) with through-beam or polarized retroreflective sensors. Typical Home Position and Power Press applications are Light Operate (LO) or closed switch to mute.

WARNING:

- **Avoid hazardous installations**
- Improper adjustment or positioning could result in serious injury or death.
- Properly adjust or position the two or four independent position switches so that they close only after the hazard no longer exists and open again when the cycle is complete or the hazard is again present.
- The user is responsible for satisfying all local, state, and national laws, rules, codes, and regulations relating to the use of safety equipment in any particular application. Ensure that all appropriate agency requirements have been met and that all installation and maintenance instructions contained in the appropriate manuals are followed.

6.2.4 Mute Enable (ME)

The Mute Enable function allows the user control of the state of a mute condition.

Select Mute Enable 1 or 2 for one of the input signals on the Input Configuration page of the configuration software.

- To enable a mute condition, pull the Mute Enable 1 or 2 pin high (+24 V DC)
- To disable a mute condition, connect the Mute Enable 1 or 2 pin to DC common (0 V DC) or leave it open

The +24 V DC and 0 V DC should come from the same power supply as the SX.

Typical uses for Mute Enable include:

1. Allowing the machine control logic to create a 'window' for muting to begin
2. Inhibiting muting from occurring
3. Reducing the chance of unauthorized or unintended bypassing or defeating of the safety system

6.2.5 Mute Lamp Output

The SX's display provides a visible indication that the safety device's safeguarding function is muted.

Under **Output Configuration**, select a Muting Lamp output. Configure one of the Output Signals as Muting Lamp 1 or 2. The Muting Lamp 1 or 2 line will pulse on and off +24 V DC when the system is muted.

CAUTION:

- **Mute Status Must Be Readily Observable**
- Failure to follow these instructions could result in serious injury or death.
- Indication that the safety device is muted should be provided and be readily observable. Failure of this indication should be detectable and prevent the next mute, or the operation of the indicator should be verified at suitable intervals.

6.2.6 Mute Time Limit (Backdoor Timer)

The Mute Time Limit (Backdoor Timer) allows the user to select a maximum period of time that muting is allowed to occur. The Mute Time Limit can be set between 10 and 1080 minutes in 1-minute increments using the configuration software.

The timer begins when the second muting device makes the simultaneity requirement and allows a mute to continue for the predetermined time. After the timer expires, the mute ends no matter what the signals from the mute devices indicate. An Override can be performed to clear the obstruction (if configured). For no time limit (infinite time), select a time of 0 minutes.

Factory default setting: 10 minutes

© Banner Engineering Corp. All rights reserved.
www.bannerengineering.com

WARNING:

- **Selecting the Muting Time Limit (Backdoor Timer)**
- It is the user's responsibility to ensure the Mute Time Limit (Backdoor Timer) setting does not create a hazardous situation.
- Select an infinite time for the backdoor timer (disabling) only if the possibility of an inappropriate or unintended mute cycle is minimized, as determined and allowed by the machine's risk assessment.

6.2.7 Mute-Dependent Override

Overriding a safeguarding device is the manual interruption or suspension of the normal function of a safeguard under supervisor control. Typically, an Override is needed to clear an object that is stuck within the SX's Safety Zone, such as in an entry/exit application.

Overriding a safeguarding device should not be confused with muting, which is the temporary, automatic suspension of the safeguarding function of a safeguarding device during a non-hazardous portion of the machine cycle. Muting allows for material to be manually or automatically fed into a machine or process without issuing a stop command.

When Override (or Bypass) is used, the following precautions must be taken:

- Prevent exposure to any hazards during an Override; supplemental safeguarding must be provided per ANSI B11.19, NFPA 79, IEC/EN 60204-1, and ISO 13849-1.
- The means of overriding and visual indication must be provided and be readily observable from the location of the safeguard.
- The reset, actuation, clearing, or enabling of the safeguarding device must not initiate hazardous motion or create a hazardous situation.
- Standards require the use of spring return, hold-to-run, devise or secure momentary action push buttons, located so that it will not be possible to enter the hazardous zone while maintaining the state of the devices.

The SX5 Override function can be configured to be initiated via different methods. In the stand-alone and master models, a one-terminal Single Line Pattern option can be chosen. In the master units with at least a 12-pin cable, a Single Line Pattern using one terminal can be configured. You can also select a two-terminal configuration based on signal level or signal edges.

For either method, the Override switch(es) must be supervised and must prevent automatic operation. The single terminal Single Line Pattern requires one normally closed (NC) switch connecting +24 V DC to the Override input pin. The dual terminal level or edge configuration requires one normally open (NO) and normally closed (NC) switch connecting +24 V DC to Override 1 and 2 input pins.

NOTE: The switch connected to override 1 pin should be normally open. The switch connected to override 2 pin should be normally closed.

The override input(s) force the SX5 system outputs on but should not start the hazardous motion of the machine. The machine should also include a momentary machine start switch to initiate hazardous motion and stop hazardous motion if released. Also one or more of the following must be true:

- Motion should be initiated by a hold-to-run or similar device.
- If a portable control station (e.g. an enabling device) with an emergency stop device is used, motion may be initiated only from that station/device.
- Automatic machine operation must be prevented by limiting range of motion, speed, or power (e.g. only used in inch, jog, or slow speed modes).

At all times, all emergency stop devices must remain active.

Mute Dependent Override with 8-pin models— The stand-alone and master units connected only via the 8-pin QD only have one pin for an override. Thus the only option is the Single Line Pattern override input. The initiation of the override function is not as simple as opening the override switch. The scanner must receive a specific series of voltage signals to start the override process. To force the scanner's outputs on, the safety zone must be violated and at least one mute sensor must be blocked (on). At this time, the override switch must be opened and closed three times, for less than one second each time.

© Banner Engineering Corp. All rights reserved.
www.bannerengineering.com

Figure 51. Mute dependent override timing diagram

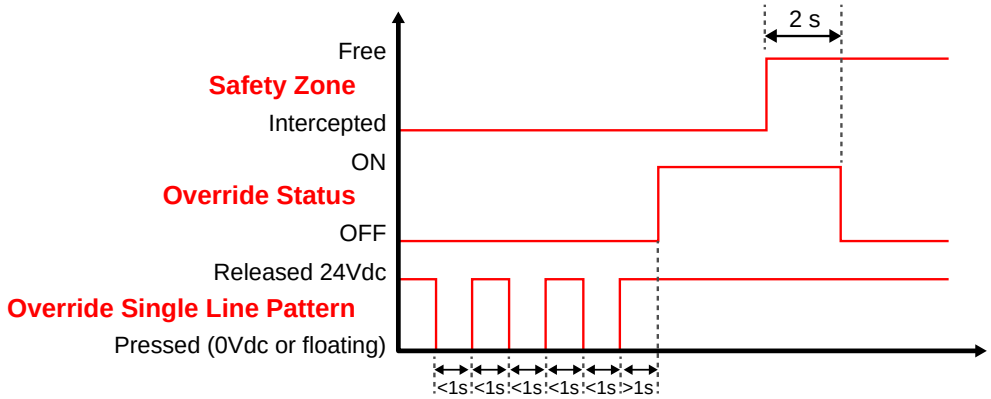

When the override signal is accepted the display will show Override and the OSSD LED will be on green.

Mute Dependent Override with 12-pin or more models—Other than being able to select the one terminal Single Line Pattern override configuration, a configuration can also select a two input Level triggered or a two-input Edge triggered override configuration. The difference between these two override processes is what happens to the override switches once the override process starts.

The override process forces on only its OSSD pair of outputs (OSSD1 or OSSD2, if multiple outputs are in use). If an area outside of the muted area is blocked, the outputs stay on. It is the operator's responsibility to monitor the process for safety. If other OSSD outputs are in use, a blockage of their zones will cause them to turn off.

Level Triggered Pattern—The input sequence to be followed for activation is indicated by the following figure:

Figure 52. Level triggered pattern timing diagram

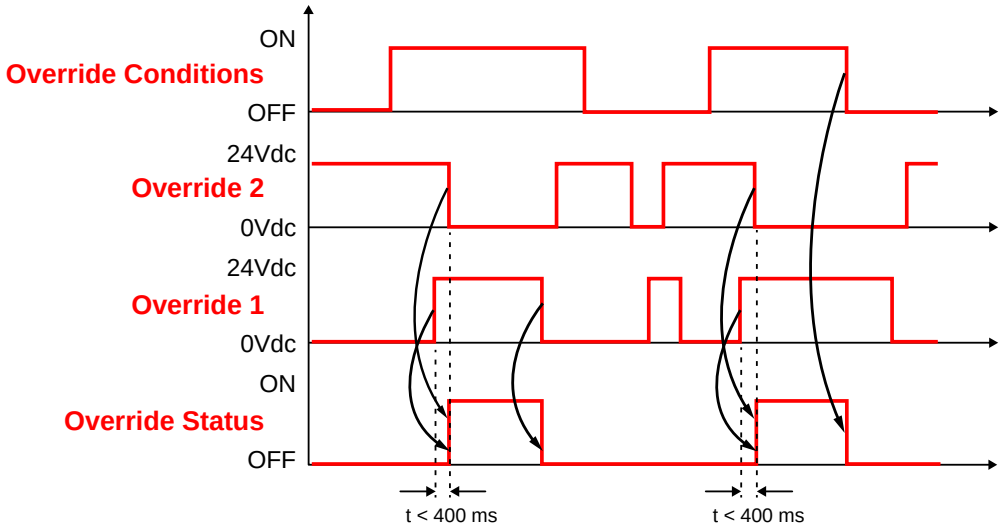

NOTE: Override 1 must go high for a minimum of 120 ms before Override 2 goes low, but Override 2 must go low a maximum of 400 ms after Override 1 goes high.

Edge Triggered Pattern—The input sequence to be followed for activation is indicated by the following figure:

© Banner Engineering Corp. All rights reserved.
www.bannerengineering.com

Figure 53. Edge triggered pattern timing diagram

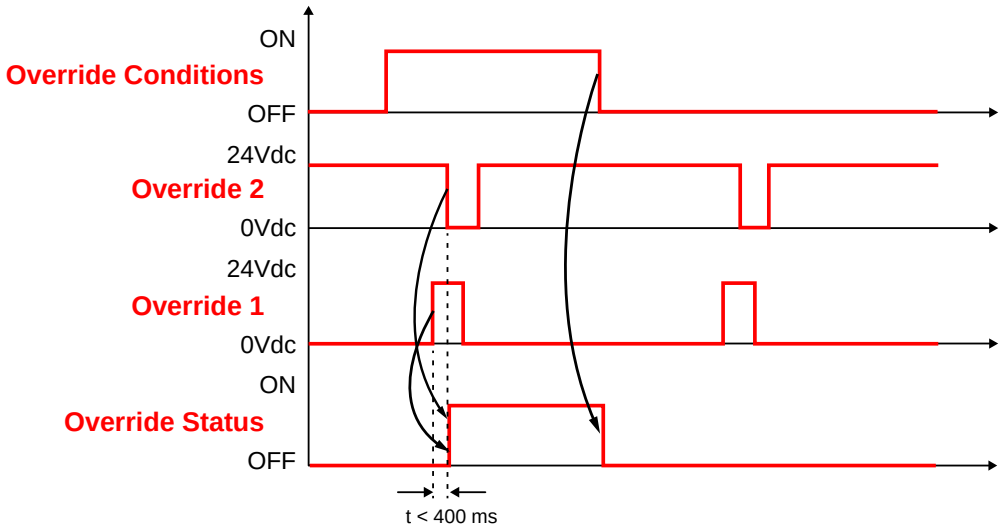

NOTE: Override 1 must go high for a minimum of 120 ms before Override 2 goes low, but Override 2 must go low a maximum of 400 ms after Override 1 goes high.

In either configuration, when the override signal is accepted the display will show Override and the OSSD LED will be green.

The Mute-Dependent Override function allows the user to manually force the OSSD outputs on for up to the configured maximum override time (120 seconds). To initiate an override, the scanner's Safety Zone must be violated with the OSSD outputs off and at least one mute device must be blocked (on). The override function automatically terminates when one of the following happens:

- The interruptions of the safety zone are cleared (in bidirectional-muting configuration)
- All the mute sensor inputs are de-actuated (switched to the off state) (in a bidirectional-muting configuration)
- The 120-second maximum override time limit has expired
- Either override input returning to their normal state (Override 1 going open or Override 2 going closed) (when configured for level triggered)
- All the muting sensors are de-actuated and no beams of the Safety Zone are interrupted (in a unidirectional-muting configuration)

The SX's outputs stay on at the end of the override sequence (assuming the SX's Safety Zone is clear, and it is configured for Automatic Restart).

CAUTION: Single Line Pattern and Edge Triggered: After the override starts, changing the state of the override switches has no affect on the override function. Engaging an e-stop or releasing the machine's hold-to-run switch can be used to stop the process. Conduct a risk assessment to ensure this cannot create a hazardous situation.

6.2.8 Muting Function T (X) (Bidirectional) or L (Unidirectional) Selection

The SX has multiple muting configurations. The SX can monitor and respond to muting sensors in the Bidirectional or Unidirectional configuration.

Configure the directional setting of the muting on the **Input Configuration** screen. The configuration can also select total (mute the entire safety zone) or partial (mute just a defined section of the safety zone) muting.

Factory default setting: Bidirectional

Use the X configuration when the SX is mounted vertically and Bidirectional is selected in the configuration. The X configuration uses two muting sensors (e.g. two pairs of opposed-mode photoelectric sensors as shown below). The crossing point of the two sensing paths must be on the hazardous side of the Safety Zone.

© Banner Engineering Corp. All rights reserved.
www.bannerengineering.com

Figure 54. Muting function in the X configuration

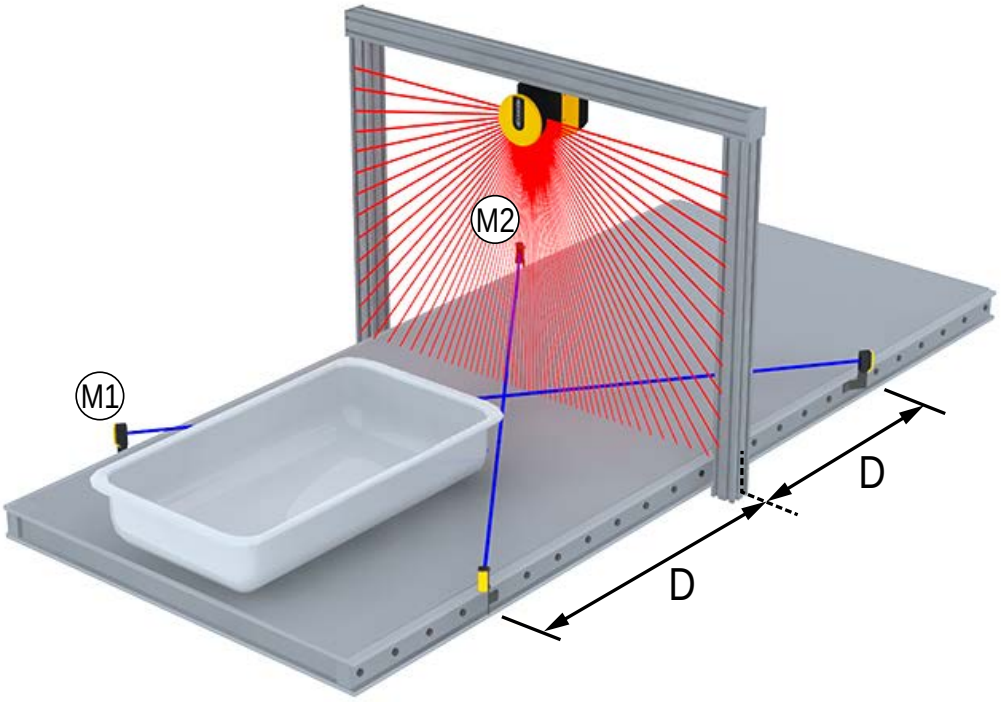

Use the T configuration when the SX is mounted vertically and Bidirectional is selected in the configuration. The T configuration uses four muting sensors. For example, four pairs of opposed-mode or retro-reflective photoelectric sensors or diffuse photoelectric sensors with background elimination, spaced with two on the inside and two on the outside of the Safety Zone.

Figure 55. Muting function in the T configuration

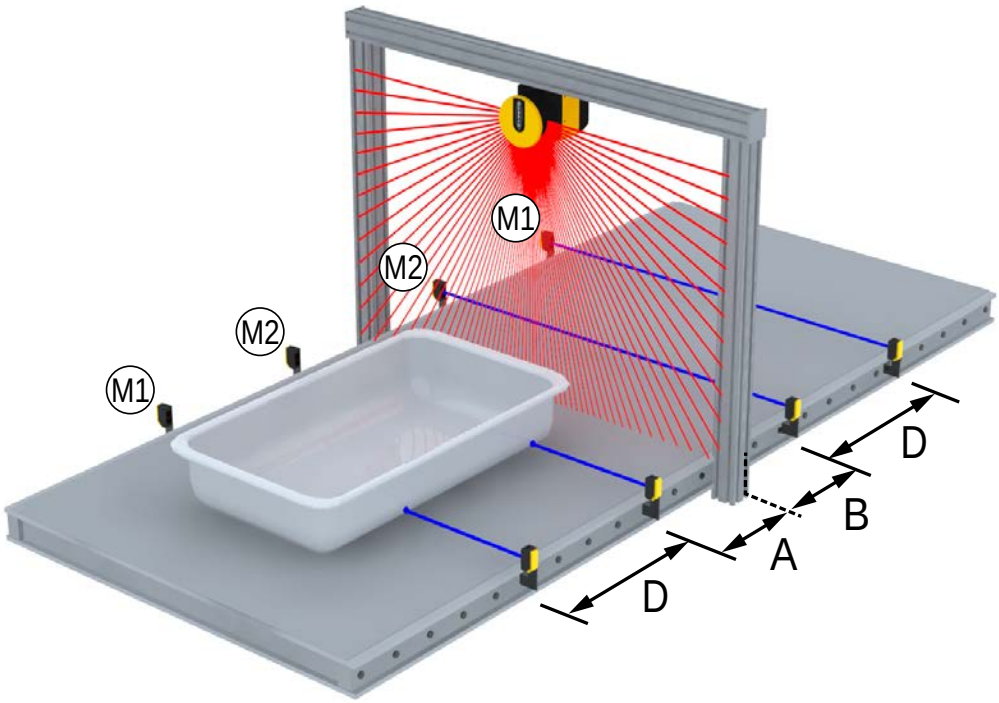

Use the L configuration when the SX is mounted vertically and Unidirectional is selected in the configuration. This configuration is suitable for applications requiring unidirectional movement of objects. This configuration uses two mute sensors (e.g. two pairs of opposed-mode photoelectric sensors) stationed on one side of the Safety Zone. The muting is initiated when the two sensors are made within the configured maximum muting activation delay time (order does not matter).

© Banner Engineering Corp. All rights reserved.
www.bannerengineering.com

The mute cycle ends when the time limit is reached after the first mute sensor clears. The time limit is determined by multiplying the M coeff and the elapsed time between the activation of M1 and M2 (see "Input Configuration" on page 94).

Figure 56. Muting function in the L configuration

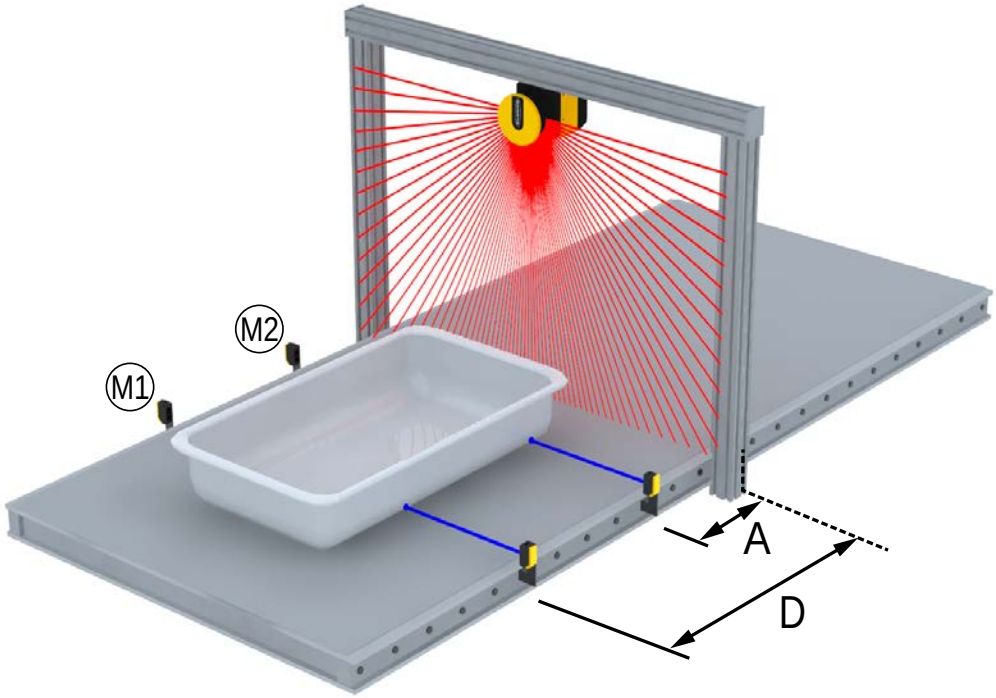

CAUTION: Unidirectional muting should only be used for removing materials from the dangerous area.

6.3 Encoder Functions

In mobile applications, the Safety Zone can change according to the position, direction, and speed of the vehicle. A typical example is the use of the Safety Laser Scanner on an Automated Guided Vehicle (AGV). If the speed changes, the minimum safety distance changes accordingly (the faster the movement, the longer the distance since the stopping time goes up).

To meet such requirements, the SX5-ME70 model is equipped with encoder inputs that allow measuring the actual speed of the vehicle. Speed information is received from two independent encoders through high speed inputs supported by the 8-pin connector (pins 4, 5, 6, and 8).

The scanner receives the signal sent by the encoders. The scanner uses these signals in conjunction with the Area Switch inputs to select the appropriate Zone Set (as defined by the configuration) for the AGV situation and speed. To this end, different Zone Sets must be configured so that each one will be activated by means of the area switch inputs and encoder speed range. The number of available zone sets depends on the number of available inputs. The maximum number of zone sets is 70.

When encoders are used in a configuration the following information is needed: Encoder Δ [%] and Encoder 1 / 2 [p/cm]

Encoder Δ [%]—This is the allowable variation in the speed measures collected by Encoder 1 and Encoder 2. The minimum value is 0%, the maximum value is 45%, the default value is 25%. To calculate the allowable variation for your application, use the following formula:

$((V_{max} - V_{min})/V_{min}) \times 100$ where
V_{max} = Maximum speed
V_{min} = minimum speed

If the Encoder Δ is exceeded, the OSSDs enter the OFF state to stop the vehicle. Exceeding the Encoder Δ is only allowed within a certain time window, based on the vehicle speed:

© Banner Engineering Corp. All rights reserved.
www.bannerengineering.com

- If the vehicle speed is between –10 cm/s and + 10 cm/s, the vehicle will not be stopped, regardless of how long the Encoder Δ persists.
- If the vehicle speed is between –30 cm/s and -10 cm/s or +10 cm/s and +30 cm/s, the Encoder Δ can be exceeded for a maximum of 60 seconds.
- If the vehicle speed is ≤ –30 cm/s or ≥ +30 cm/s, the Encoder Δ can be exceeded for a maximum of 20 seconds.
- If the vehicle speed is ≤ –10 cm/s or ≥ +10 cm/s, then different directions of rotation on the encoders are only tolerated for a maximum of 0.4 second.

When the speed measured by the two encoders is not the same, the higher speed value is used as a reference for this calculation.

Encoder 1/2 [p/cm]—Encoder (1 and 2) pulse number per centimeter. For both encoders, the minimum value is 50 (default) and the maximum value is 1000. This is based on the number of pulses the encoder supplies per revolution and on the ratio between the vehicle wheel and the friction wheel on which the encoder is mounted.

Figure 57. Friction wheel and vehicle wheel

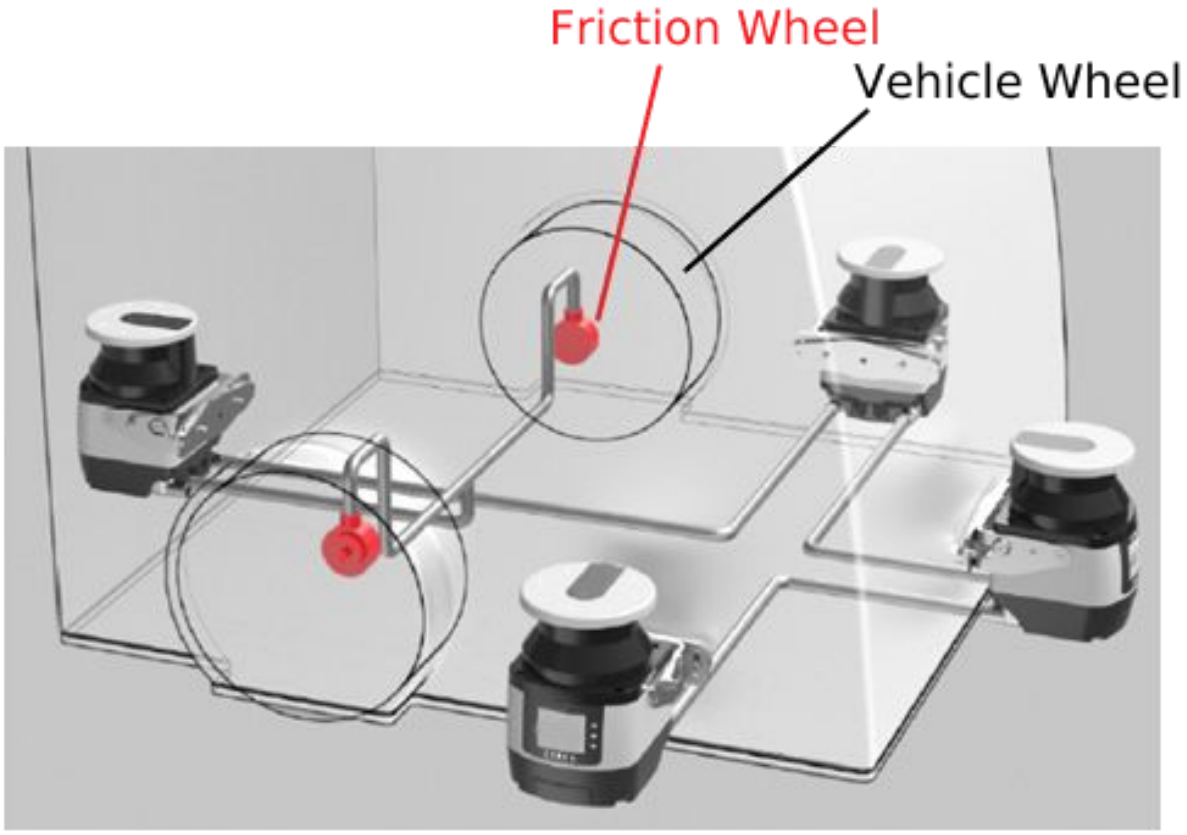

To calculate Encoder 1/2 [p/cm], follow this example:

- The vehicle wheel has a diameter of 40 cm.
- The friction wheel on which the encoder is mounted has a diameter of 4 cm.
- The incremental encoder supplies 1000 pulses per revolution.

The circumference of the vehicle wheel is 40 cm × π = 125.66 cm.

One revolution of the vehicle wheel corresponds to 10 revolutions of the friction wheel, and therefore the encoder supplies 10,000 pulses per revolution of the vehicle wheel.

To calculate the Encoder Ratio (EncR) (the number of pulses per centimeter of distance covered by the vehicle), use the following formula:

EncR = P_{rev} ÷ C where
P_{rev} = pulses per revolution of the vehicle wheel
C = circumference of the vehicle wheel

© Banner Engineering Corp. All rights reserved.
www.bannerengineering.com

In this example, the EncR value is 10,000 pulses ÷ 125.66 cm = 79.58 p/cm. In the configuration software, enter the rounded value of 80 p/cm in the relevant **Encoder [p/cm]** field. The software calculates the maximum allowed speed based on this data.

After setting the encoder values, configure the Zone Set switching. This parameter group allows editing the Area Switch input configuration depending on the number of selected Zone Sets and the Speed Range of each Zone Set.

Area Switch inputs select Zone Sets—If a different input switch coding is configured with the Area Switch inputs, the relevant Zone Sets will have either overlapping or different Speed Ranges. In this case, all Area Switches must differ by two input bit states to be valid.

Combination of Area Switch inputs and Encoder Speed range select Zone Sets—On the other hand, if more Area Switches share the same input switch coding, configure different Speed Ranges for each Zone Set.

To set Valid Speed Ranges for each Zone Set, the user first needs to calculate the maximum and minimum speeds that the scanner can read. To calculate the maximum speed (V_{max}), use the following formula:

$V_{max} = F_{max} \div EncR$ where
F_{max} = 100,000. This is a fixed value corresponding to the maximum frequency that can be read by the scanner.
EncR = Encoder Ratio, the number of pulses supplied by the encoder per centimeter of distance covered by the vehicle.

To calculate the minimum speed (V_{min}), use the following formula:

$V_{min} = -F_{max} \div EncR$

After calculating the V_{max} and V_{min} of both encoders, take the lower values as reference. The Speed Ranges of each Zone Set must not exceed these V_{max} and V_{min} values.

Example:

EncR 1 ratio = 50 p/cm (Encoder ratio for encoder 1)
V_{max} 1 = 100,000 / 50 = 2,000 cm/s
V_{min} 1 = -100,000 / 50 = -2,000 cm/s
EncR 2 ratio = 60 p/cm (Encoder ratio for encoder 2)
V_{max} 2 = 100,000 / 60 = 1,667 cm/s (selected an EncR of a different value for demonstration)
V_{min} 1 = -100,000 / 60 = -1,667 cm/s

Therefore, the maximum and minimum speeds that the Scanner can read equal respectively 1,667 cm/s and -1,667 cm/s. The Speed Ranges of each Zone Set cannot exceed these values.

The Speed Range values cannot be included within the interval from -10 cm/s to + 10 cm/s. For example, the Speed Range interval from -50 cm/s to -9 cm/s is not allowed, the interval would need to be -50 cm/s to +10 cm/s to be acceptable.

If the encoder function is disabled after configuring the Zone Sets, the Speed Ranges will be preserved. The user will need to set valid Area Switch combinations for each Zone Set or re-enable the Encoder function.

To avoid the flickering effect (continuous switching between two different Zone Sets), the user will have to consider a suitable margin between the speed ranges of different Zone Sets, as illustrated.

Figure 58. High to low speed switch point

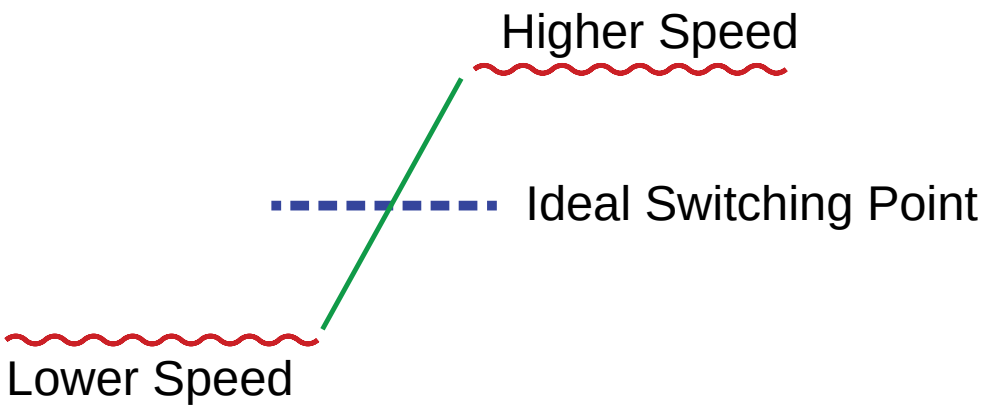

The encoder connection cables must be run to each encoder separately and correctly wired to avoid opposite sign phases.

© Banner Engineering Corp. All rights reserved.
www.bannerengineering.com

6.4 Install the Configuration Software

The SX Series Safety Laser Scanner is not required to install the software on a PC. If the PC and SX are already connected, turn the power off to the SX.

Before installing software, close all Windows applications.

1. Download software from www.bannerengineering.com (search for SX and look under Downloads).
2. Double-click on **Setup**. This file is probably in your Downloads directory.

   The installation wizard starts.
3. Click **Next**.

   The installation wizard opens the software license agreement.
4. To accept the software license contract, click **I Accept**, then click **Next**.
5. To accept the recommended installation path, click **Next**. To enter another path, click **Browse** and select the desired path.
6. Click **Install**.

   The installation process begins.
7. Click **Finish**.

   The installation process is completed.

> **NOTE:** The SX5-B can use an older version of the software (2.1.4). This can be loaded onto a computer with the latest released version.

6.5 Software Interface

In addition to being able to display a graphic rendering of the monitored area, the software provides configuration and management tools, including file title header, drop-down menus, function-specific worksheets which contain entries relevant to specific portions of the configuration.

Figure 59. Banner SX Scanner software

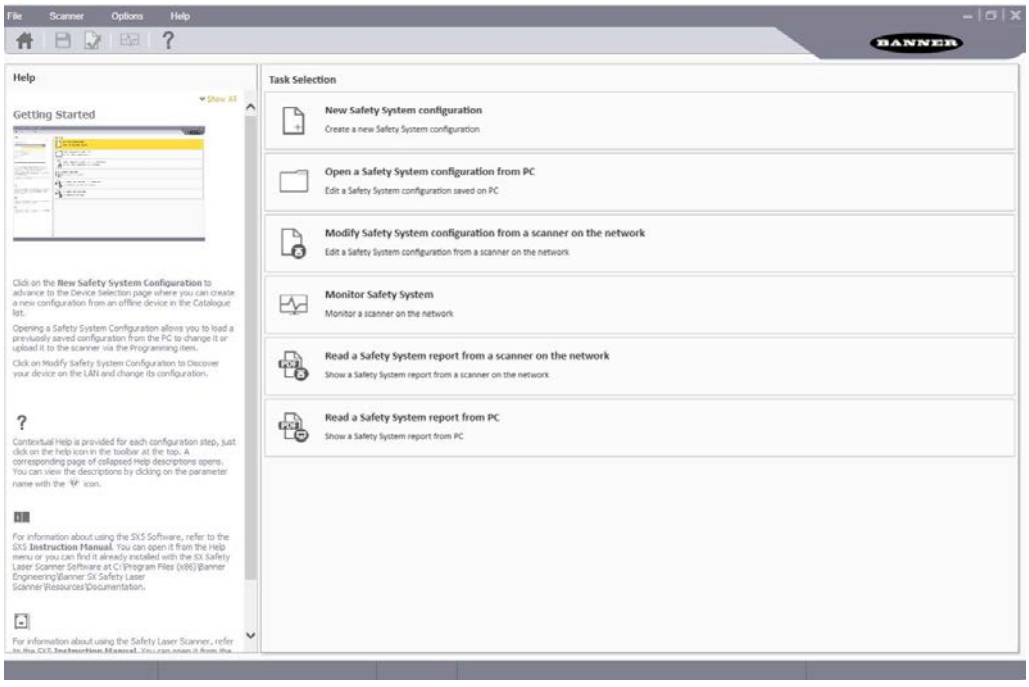

Menu Bar and **Toolbar**—Contains the Banner SX Scanner software main features.

© Banner Engineering Corp. All rights reserved.
www.bannerengineering.com

Task Selection—Presents a list of the task that can be performed from Banner SX Scanner software. These selections are also available in the **File** and **Scanner** menus.

Status Bar—Located at the bottom of the screen, the status bar displays specific information about connected devices (once discovered). It displays information on the current network status, the connected device status, the connector, and the application type.

Help Online—Includes all the information and parameters to create a proper configuration. For the next configuration steps, the help online is available only by clicking on the dedicated button.

6.5.1 Main Menu

The following menu options are available.

File

New Configuration—Creates a new device configuration from scratch.

Open Configuration from PC—Opens a previously saved Configuration file.

Read from PC - Report—Shows a Safety System Configuration Report saved on the PC.

Save—Saves the current configuration or report to PC.

Exit—Exits the configuration software user interface.

Scanner

Discovery—Searches for a scanner connected to the Network (LAN).

Direct Connect—Search for a scanner at a specified IP address.

Open Configuration from device—Opens the configuration already loaded on a scanner.

Open Shape From File - Import a shape from an AutoCAD file.

Apply Configuration—Transfers a configuration to a connected scanner.

Read from Device - Report—Shows a Safety System Configuration Report for Scanner's configuration.

Settings—Change Network Configuration, Change Access Controls, Reset Password, Factory Reset.

Update Firmware—Updates the firmware file of the scanner.

Window Replacement - Enter the window calibration process after replacing a window.

Options

Change Language—Allows the user to change the display language used in the configuration software in real-time. The selected language will also be used for successive sessions.

Change GUI Log Level—Verbose, Information or Error (Information is the default setting).

Change GUI Log Options

Advanced Monitoring

Help

Laser Scanner Instruction Manual—Opens the SX Series Safety Laser Scanner Instruction Manual.

Daily, Semi-Annual Checkout sheets

About—Opens a window that contains the configuration software release version information.

6.5.2 Toolbar

Button	Name	Function
	Home/Getting Started	Starts a session by returning to the home page (Task Selection menu page).
	Save	Saves the current configuration or report session.
	Configuration Validator	Checks the new configuration in Banner SX Scanner software before sending it to the device. Clicking this icon performs a validation test on the entire configuration in the Banner SX Scanner software. A pop-up window displays a list of configuration errors or validates the configuration.
	Monitoring	Starts a monitoring session of the connected scanner.
?	Help Online	Displays a window that includes the help online guide and it shows the parameters depending on the selected configuration step.

6.5.3 Status Bar

The status bar displays the status of four items (if a scanner is connected and selected).

- Communication status
- Connection type

© Banner Engineering Corp. All rights reserved.
www.bannerengineering.com

- Application Scenario
- Scanner status

6.5.4 Task Selection

The right side of the main window includes a list of Tasks that can be selected.

Task Icon	Description
	New Safety System Configuration: to create a Safety System Configuration from scratch.
	Open Safety System Configuration from PC: to open a saved configuration file. **NOTE:** See section "Convert a SX5-B Configuration to a SX5-B6 Configuration" on page 137 for how to handle configurations created in Banner SX Scanner software version 2.1.4 or older.
	Modify Safety System Configuration from a Scanner on the Network: to edit a configuration pulled from a scanner on the Network.
	Monitor Safety System: to enter the monitoring function of a connected scanner.
	Read the Safety System Report from a Scanner on the Network: to view, print or save a Safety System Configuration Report from a scanner on the network.
	Read a Safety System Report from PC: to view or print a Safety System configuration report stored on a PC.

6.6 Using the Software

To help the user with the device installation, the configuration software allows users to select the application Type. Depending on which device model is used for the configuration and for the safety monitoring, there are different features and functions.

Create a New Configuration—Open the software and in the Task Selection panel select **New Safety System Configuration**. After choosing the **New Safety System Configuration**, the subpanel on the left side allows the selection of the device from the **Catalogue** list. Double-click a device to select it.

If you are creating a system with both master and remote units, first select the desired master unit, then the remote units can be added by clicking on the desired remote models. The physical connection of the units must match the order of selection on this page.

To proceed with the configuration, click on the white **>**, in the upper right side on the main panel (under Banner name).

NOTE: The information provided in this section is for the newer software for the Master, Remote, and SX5-B6 units. The SX5-B software does not have all of the same features.

© Banner Engineering Corp. All rights reserved.
www.bannerengineering.com

Figure 60. Configuration Settings screen

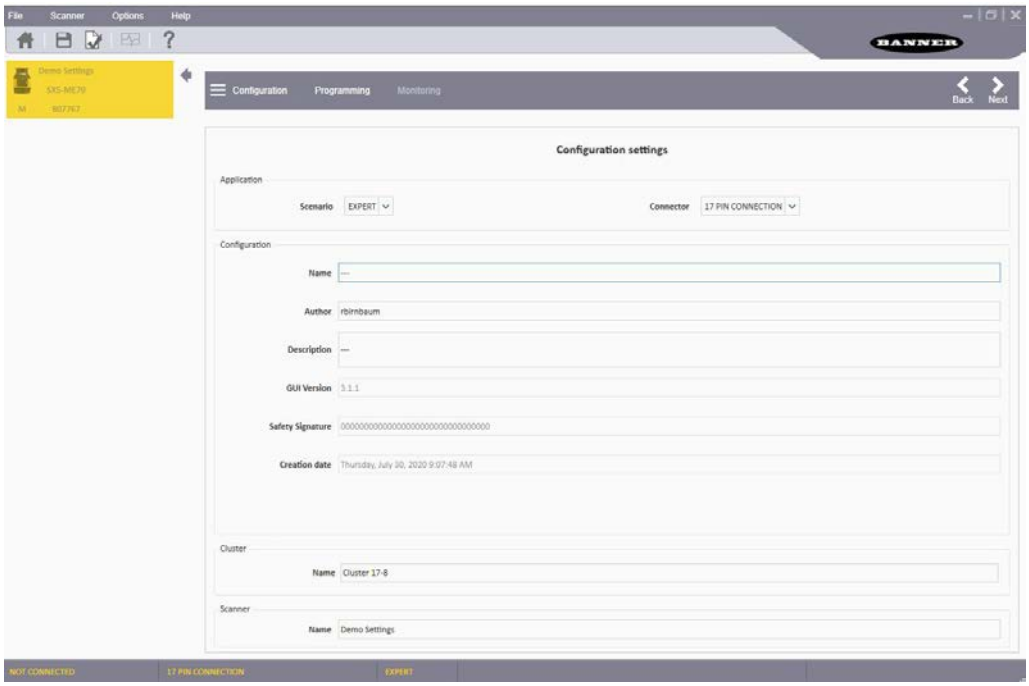

The **Application** section of the **Configuration Settings** page allows users to define the application by selecting the scenario.

- **Expert Scenario** selection provides the maximum configuration possibilities for the device; contains the entire set of parameters, regardless of the device use.
- **Vertical Scenario** selection provides the extra features/requirements necessary for vertical applications, committing the user to insert the reference point parameter.

Select the connector connection(s) planned for the application. The configuration manages the pins relative to the connector(s) selected (option vary by model selected).

It is possible to edit some of the parameters under the **Configuration** header, such as:

- Name—A name to identify the configuration
- Author—A name to identify the author (defaults to computer name but can be changed)
- Description—A short text description to identify the configuration
- GUI Version—(Read-Only) The software version of the GUI
- Safety Signature—(Read-Only) This is automatically generated to be a unique identifier that includes the scanner, configuration, creation date-time
- Creation Date—(Read-Only) The date and time the configuration was created
- Cluster Name—A name to identify the cascade string of scanners
- Scanner—A name to identify the scanner

To proceed with the configuration, click on the white **>** on the upper right side of the main panel. To go back to the previous page, click on the white **<**.

Save the configuration at any time using the **Save** icon on the tool bar.

© Banner Engineering Corp. All rights reserved.
www.bannerengineering.com

6.6.1 Output Configuration

Figure 61. Output Configuration screen

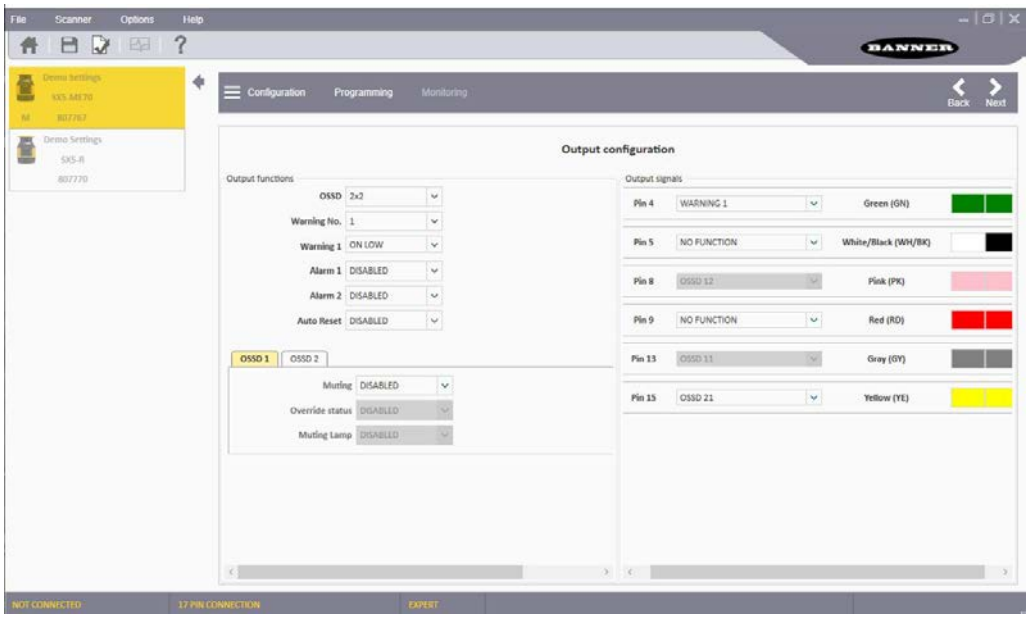

Output Functions

- **OSSD**—to select how many OSSD pairs are used for a given configuration. This component is connected to the machine control system and associated with the Safety Zone. If an object violates the Safety Zone, the OSSD pair switches to the OFF state effectively shutting down the machine. The possible number of outputs (1, 2, or 3) varies depending on the connector selection. All OSSD outputs are managed in pairs.
  - **1x2** (one pair)—Two pins are automatically assigned to OSSD1/1 and OSSD 1/2; pin assignment varies depending on connector selection
  - **2x2** (two pairs)—Four pins are automatically assigned (if available) to OSSD1/1, OSSD1/2, OSSD 2/1, and OSSD 2/2
  - **3x2** (three pairs)—Six pins are automatically assigned (if available) to OSSD1/1, OSSD1/2, OSSD2/1, OSSD 2/2, OSSD 3/1, and OSSD 3/2
- **Warning**—to select how many Warning Zones to use for the configuration. This is the area outside the Safety Zone, where an object can be detected but the device will not switch the OSSDs to the OFF-State. It can be used to light a warning lamp or sound a siren. Depending on the configuration, a maximum of two Warning Zones can be configured. Some configurations allow the warning zones to be accessed using the Ethernet connection instead of hardwired. For each Warning Zone selected, an auxiliary warning output is assigned. If no warning outputs are assigned, no Warning Zones are created in the configuration.
- **Warning x**—to select when the warning output should be on (conducting). To activate the warning output when the warning zone is clear, select On Low. To activate the warning output when the warning zone is blocked, select On High.
- **Alarm 1**—enabling Alarm 1 activates the Clean Window device error warning (turns on when CLEANW2 message shows on the display and the window should be cleaned to avoid entering a lockout condition). Some configurations allow this output to be accessed using the Ethernet connection instead of hardwired.
- **Alarm 2**—enabling Alarm 2 activates the Device Error warning (turns on when the unit shuts down because of a fault warning (any fault that turns the outputs off will trigger this output)). Some configurations allow this output to be accessed using the Ethernet connection instead of hardwired.
- **Auto Reset**—enabling the Auto Reset feature results in the scanner automatically attempting to reset itself from an error condition. The scanner will undergo the reset process every 10 seconds. If the error condition is no longer present the scanner will resume normal operation. [The Auto Reset function will be inhibited if the scanner locks out in INTFx more than 5 times within 15 minutes. In this case a power cycle is necessary to reactivate the scanner.]

The next functions can be individually set for OSSD1 and/or OSSD2. OSSD3 cannot be muted.

- **Muting**—enabling the Muting function allows the scanner to operate under controlled conditions where an object can pass through the Safety Zone without the scanner's OSSD outputs switching to the OFF-State (see "Muting Functions" on page 75). Dedicated devices (mute sensors) must be connected to the scanner input signals to control this function. The two possible settings are:
  - **Disable**—No muting abilities
  - **Enable**—Muting turned on; enabling muting reduces the number of Zone Sets that can be configured

© Banner Engineering Corp. All rights reserved.
www.bannerengineering.com

- **Muting Lamp**—if the Muting function is enabled, an optional muting lamp can be connected to a scanner output signal to indicate when the scanner is functioning in the Muted condition. The scanner display will always display that the scanner is muted during a muting cycle. To add the Mute Lamp function, set the feature to Enable.
- **Override Status**—when the muting function is enabled, enabling the Override Status allows assigning an output signal to indicate when the safety function has been manually deactivated (forcing the OSSDs on) to clear the safety zone from a work cycle anomaly.

Output Signals—assigning wires to output signals. The first OSSD pair is automatically assigned to specific pins and can not be changed. The Multi In/Out pins can be assigned as inputs or outputs depending on the configuration settings. If one of these pins is set as an output, it can not be used as an input. From the **Output Configuration** page, the Multi Out pins and Multi In/Out pins can be assigned as follows (depending on configuration settings):

- **No Function**—If the pin is to be used as an input or not at all select no function at this time.
- **Warning x**—Assign the pin as either auxiliary warning output 1 or 2.
- **Muting Lamp**—Assign the pin as a mute lamp output if muting is selected.
- **Alarm x**—Assign the pin as either alarm output 1 or 2.
- **Override Status**—Assign the pin as a override lamp if override is enabled.
- **Safety Output**—Assign the pin as half of an OSSD output pair is more than one OSSD output pair is selected.

Click on the white **>** arrow in the upper right corner to move to the next configuration screen. Click on the white **<** arrow to return to the previous screen.

6.6.2 Zone Set Configuration

A Zone Set is the combination of a configured Safety Zone (SZ) and Warning Zone (WZ).

When active, a specific Zone Set has sole control of the safety outputs (OSSD1 and OSSD2) and the Warning auxiliary output, if set in the configuration. This function is useful to change the safeguarding area in applications in which a hazard is not continually present or in applications in which speed and stopping distances varies.

Figure 62. Zone Set Configuration screen

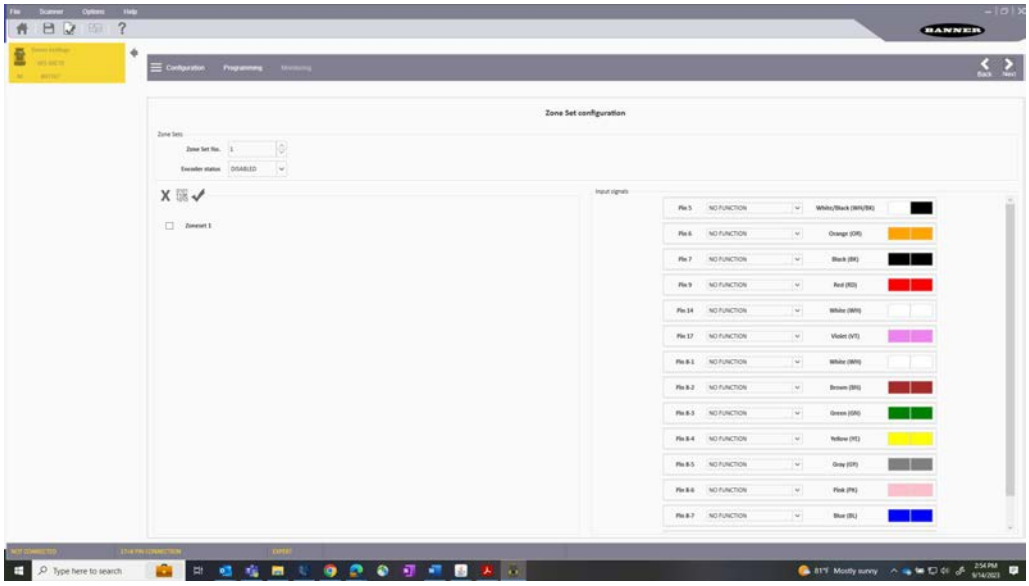

Zone Set Number—Selects the number of Zone Sets to use for the configuration. The default value is one Zone Set (no Area Switching). Add more Zone Sets using the up arrow. The maximum number of Zone Sets depends on model and connector selected.

Input Delay Max (ms)—Required when at least two Zone Sets are selected; sets the delay to apply between switching from one Zone Set to another. The input delay allows waiting for the Area Switch inputs to stabilize from their transient states before accepting the Zone Set. The Zone Set will not switch until the end of the selected time (the time starts when it sees the first transition), otherwise the activation and deactivation of the inputs could put the device in undesired/invalid and temporary switching zone input combinations and cause the device to enter the fault state. The minimum (default) input delay value is 30 ms and can be increased in 30 ms increments.

© Banner Engineering Corp. All rights reserved.
www.bannerengineering.com

> **NOTE:** The actual zone set switching occurs within a maximum processing time of 60 ms after the selected input delay time has expired. Firmware versions below 3.1.3 can take up to 250 ms for this processing time.

Shut Off Status—Enables or disables the Shut Off function (not available in the SX5-B model). This is an energy savings feature that tells the scanner to go into sleep mode (display turns off and motor stops). Zone Set 1 becomes Shut Off. This Zone Set cannot have any Safety or Warning Zones, and the Encoder speed range is set to 0. Coming out of shut off mode can take about 30 seconds.

Encoder Status—Enables or disables encoders for dynamic applications. This field is only available in scanners that support encoders (SX5-ME70 with connector 17+8 selected).

These next few fields are only visible (required) if Encoder Status in enabled.

Area Switch Number—Sets the number of Area Switch inputs that are required. This number does not have to match the Zone Set number because the encoder inputs can be used in conjunction with the area switch inputs to select the Zone Set. This number can be increased or decreased.

Active Input Number—Sets the number of available Active Inputs. This value can be increased according to the number of Area Switches.

Encoder Δ (%)—Allowable variation in the speed measures collected by Encoder 1 and Encoder 2. The minimum value is 0%, the maximum value is 45%, and the default value is 25%.

Encoder 1 + 2 (p/cm) - Encoder (1 and 2) pulse number per centimeter. For both encoders, the minimum value is 50 (also the default value) and the maximum value is 1,000. This value is based on the number of pulses the encoder supplies per revolution and on the ratio between the vehicles wheel and the friction wheel on which the encoder is mounted.

 X ICON (Delete)—Removes selected Zone Set(s); if Zone Set is selected, the Zone Set will be deleted when the 'X' icon is clicked. This results in the Zone Set Number being reduced by the number of Zone Sets that were just deleted. Clicking the down arrow of the Zone Set Number also reduces the number of Zone Sets but it will delete the highest numbered Zone Set (which might not be the Zone Set that needed to be removed).



BINARY ICON (Binary)—Automatically sets the input switch coding. Alternately, you can click the Area Switch boxes to manually change its state. All Area Switching must differ by two input bit states (or encoder states) to be valid.

 CHECK ICON— Validates the Zone Set coding.

If a different input switch coding is configured for each Area Switch, the relevant Zone Sets can have either overlapping or different encoder Speed Ranges. In this case, all Area Switches must differ by two input bit states to be valid. If more Area Switches share the same input switch coding, different Speed Ranges must be configured for each Zone Set.

More than one Zone Set can be configured to define either separate or overlapping areas and these can be switched between using combinations of input signals.

To create a Zone Set, the user must configure it through the scanner's configuration software.

Single Zone Set Configuration

This configuration step allows the user to set the Zone Set parameters.

For this example, the configuration includes only one Zone Set, so it is not necessary to insert or edit any parameters. The Input Wires parameters do not require any assignments in this situation.

Click the white **>** to move to the next page.

© Banner Engineering Corp. All rights reserved.
www.bannerengineering.com

Multiple Zone Sets Configuration

When more than one Zone Set is used, the Zone Set inputs (area switch inputs) are used to select which Zone Set is active. External logic (e.g., a PLC) is capable of selecting one of up to 70 (depending on the model) configured Zone Sets stored in the scanner at any given time.

After the scanner is configured, switching over to or activating an individual Zone Set is controlled by the input pins (area switch inputs) assigned in the configuration software. The Zone Set selection can also be controlled by the Area Switch inputs and Encoder input values.

The input combination that makes the Zone Sets change (area switch inputs) must be unique and must not be susceptible to false external signals (at least two inputs must change).

WARNING:

- **Use Zone Set switching to change the area of safeguarding.**
- Failure to follow these instructions could result in serious injury or death.
- **Changing the Safety/Warning Zone Set from one pair to another must not expose any individual to a hazard or hazardous situation.** Supplemental safeguarding may be required.

The conditions for switching Zone Sets must be in accordance with a risk assessment. Machine stopping/braking distances, scanner system response time (including interfacing devices), machine stop time and other factors that influence the Safety Distance (minimum distance) and Stopping Distance calculations must be considered to safely use the Zone Set switchover function.

In applications that incorporate Zone Set switchover, Minimum Distance D and Side Distance Z must be calculated individually for all Zone Sets. Conditions to allow switching Zone Sets:

- Only one Zone Set can be active after the switchover time; see the Zone Set logic in the configuration software.
- Zone Set switchover is allowed even if there is an intrusion into the active Safety Zone (i.e. OSSDs are off).
- The switchover must be made within the Max Input Delay time selected in the configuration software. The input delay allows waiting for the Area Switching inputs to stabilize from their transient states before accepting the Zone Set change. Otherwise the activation and deactivation (bouncing) of the inputs could put the device into undesired or invalid and temporary switching zone input combinations and therefore cause the device to enter the fault state. The minimum input delay (default) value is 30 ms. It can be increased in 30 ms increments.

In addition, factors dependent on the risk assessment that may affect the safety circuit integrity level include:

- Analyze the means of selecting Zone Sets with respect to failure modes to ensure that an unintended switchover does not occur.
- Ensure that selecting/deselecting Zone Sets does not expose any individual to a hazard. Supplemental safeguarding may be required.

Zone Set Configuration

1. On the **Zone Set Configuration** screen, set the **Zone Set No**.

   Depending on the model and the other features used, you can use from 1 to 70 different Zone Sets by changing the number shown to match the number of desired Zone Sets.

   When increasing the number of Zone Sets, the warning 'To go on, Zones design will be modified' may display. Click **Ok**. The previous settings allow multiple Zone Sets. If a different warning displays, the previous settings must be changed to use multiple Zone Sets.

2. Set the **Input Delay Max** (ms).

   After more than one Zone Set is selected, this input field is displayed. This allows the setting of the delay applied between switching from one Zone Set to the next. The input delay allows waiting for the Area Switching inputs to stabilize from the transient states before accepting the Zone Set change. Otherwise the activation and deactivation of the inputs could put the device in an undesired or invalid Zone Set state resulting in a potential unsafe or fault condition. The minimum input delay (default) value is 30 ms. It can be increased in 30 ms increments.

   WARNING: Set the **Input Delay Max** time as low as possible because the scanner will not react to violations of the new Zone Set's Safety Zone during this Zone Set changeover time. The actual zone set switching occurs within a maximum processing time of 60 ms after the selected input delay time has expired. You must wait at least this maximum processing time (60 ms) before switching the inputs again in order to avoid a rare, but possible, lockout condition.

© Banner Engineering Corp. All rights reserved.
www.bannerengineering.com

NOTE: For best performance, update the device firmware to the latest available release. For all product software releases prior to 3.1.5, the mentioned processing time will be at least 250 ms instead of 60 ms (3.1.5 does not apply to the SX5-B units).

3. Set the **Zone** parameters.

   This parameter group allows editing the Area Switch input combinations depending on how many Zone Sets are selected. The number of Area Switches (AS#) equal to the number of unassigned inputs will appear in the graphic. Manually set the input switch coding by clicking inside the Area Switch boxes for each Zone Set. To be valid, all Area Switching must differ by two input bit states. It is possible to set the input switch coding with specific function buttons.

   - If the configuration includes only one Zone Set, it is not necessary to insert any parameters.
   - As more zone sets are added, more area switch inputs are needed (the maximum number of area switch inputs is 8 for 37 to 70 Zone Sets).
   - If two Zone Sets are selected, at least two pins must be assigned to the Area Switch function.
   - For the SX5-B and SX5-B6 models: If 3 to 6 Zone Sets are selected (in this case no other functions are available), pins 1, 3 and 4 must be assigned to the Area Switch function.
   - For the SX5-B and SX5-B6 models: If 4 to 6 Zone Sets are selected, the ability to switch between Zone Sets is limited. This limitation is to ensure that two Area Switch inputs must change to switch between Zone Sets. The software does not obligate changing the Zone Sets sequentially (i.e. Zone Set 1, 2, 3, 4, etc in order), therefore the user must verify that the selected passage from one Zone Set to another (in any order) guarantees that at least two Area Switch inputs change signal levels.

   Figure 63. Switching state map

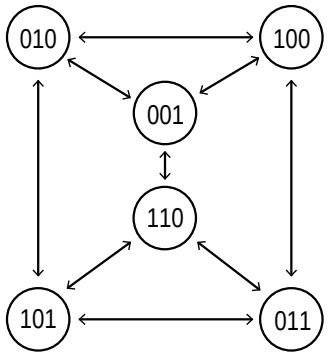

4. Set the **Input Signals** (wires).

   This parameter group assigns the signals of the input functions to the scanner pins. Each pin is also associated with color-coded cable wiring, according to safety equipment regulations and standards. Pins already assigned as an output are grayed out.

Encoder— On the Zone Set Configuration page, enable the Encoder function for dynamic applications (mobile equipment). This function is only available for SA5-ME70 model when connector 17+8 is selected. For more information on the Encoder Function, refer to "Encoder Functions" on page 82.)

© Banner Engineering Corp. All rights reserved.
www.bannerengineering.com

Figure 64. Encoder enabled screen

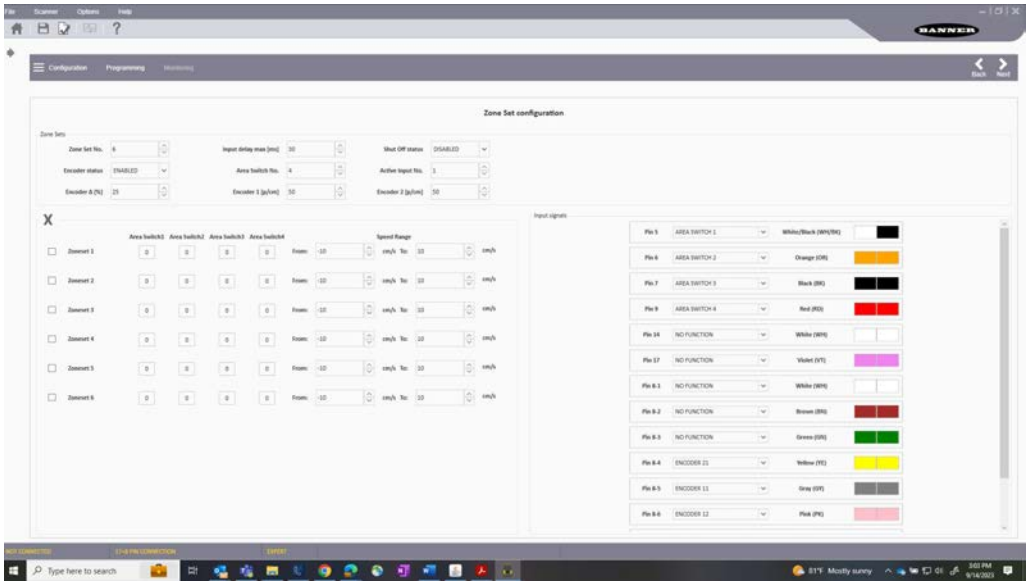

Use the encoder readings (speed range) in conjunction with the Area Switch inputs to select the appropriate Zone Set.

Click on the white **>** arrow in the upper right corner to move to the next configuration screen. Click on the white **<** to return to the previous screen.

6.6.3 Input Configuration

Figure 65. Input Configuration screen

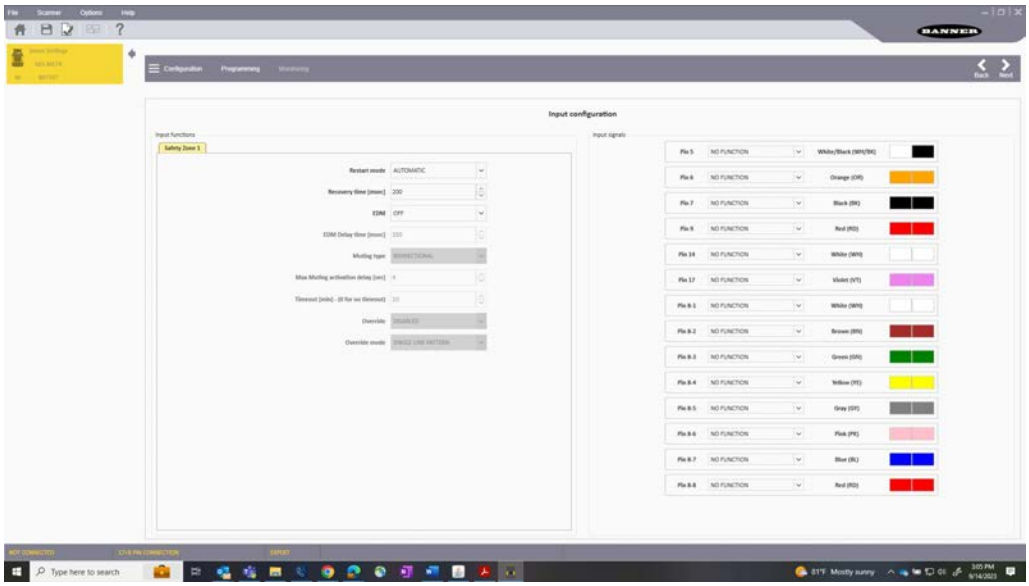

For each OSSD pair configured, define the following parameters under **Safety Zone x** in the **Input Function** section.

1. Configure the **Restart Mode**.
   - **Automatic**—The scanner automatically returns the OSSD pair to the On-State after all detected objects are removed from the Safety Zone and the configured Recovery Time elapses.
   - **Manual**—The scanner returns the OSSD pair to the On-State after all detected objects are removed from the Safety Zone and a manual Restart switch (reset push-button) is pressed for at least 500 ms, but no longer than 4.5 seconds.
2. Define the **Recover Time**.

   This parameter is only configured for Automatic Restart Mode. The Recover Time is the time between the object removal from the Safety Zone and the OSSDs going to the On-State. Select the time to elapse before the OSSD pair

© Banner Engineering Corp. All rights reserved.
www.bannerengineering.com

returns to the On-State. The minimum time is 200 ms. This can be increased to 60,000 ms in 1 ms increments. Default: 200 ms

3. Select EDM to enable the External Device Monitoring (EDM) function.
4. Configure **EDM Delay Time** (ms).
   The time delay provided for the monitored device to go from its open state to its closed state when the OSSD outputs turn off can be set from 200 to 1000 ms. Default setting is 350 ms.
5. Define the **Muting Type**.
   If muting is not selected, this option is grayed out. The Muting function can be used in two different configurations.
   - **Bidirectional**—Used when objects can pass through the Safety Zone from either direction; requires two or four muting sensors be connected to the scanner inputs
   - **Unidirectional**—Used when objects can pass through the Safety Zone from only one direction (out of the hazardous area); requires two muting sensors be connected to the scanner inputs
   - **M coeff.**—If Unidirectional Muting is selected, the M coeff is displayed. The M coefficient is the time delay multiplier that times out the Muting function after a mute sensor clears (typically mute 1). The M coeff can be set from 2 to 16. This is the multiplier of the activation delay between the initiation of the two muting sensors. The maximum amount of time that the system will stay muted after the clearing of mute 1 is M Coeff × Max Inputs Delay (actual elapsed time between the activation of mute 1 and mute 2).
6. Define the **Max Inputs Delay** (seconds).
   The maximum allowable time delay between activation of mute 1 and mute 2. This parameter can be set from 1 to 16 seconds with the default being 4 seconds. If muting is disabled, this field cannot be adjusted.



CAUTION: The maximum input delay is based on the conveyor speed and package length. Set the delay long enough to ensure only the package is passing through the curtain and short enough to prevent inappropriate or unintended muting cycles.

7. Define the **Timeout** (minutes).
   This parameter allows the entering of a muting backdoor timer (maximum time to stay muted). The default time limit is 10 minutes. The time limit can be increased from 10 minutes to 1080 minutes in 1 minute increments. For no time limit, enter 0.



WARNING: Select an infinite time for the Muting Time Limit only if the possibility of an inappropriate or unintended mute cycle is minimized as determined and allowed by the machine's risk assessment. The user is responsible to make sure that this does not create a hazardous situation.

8. Enable or disable **Override**.
   If muting is enabled, an override function can also be enabled. The override allows OSSDs to be manually forced on to drive an item out of the Safety Zone.



WARNING: Measures must be taken to prevent activation of the mute-depended override function from a fault or inadvertent operation of the initiating device.

9. Set the **Override Mode**, if applicable.
   The override mode can be selected as Single Line Pattern, Edge, or Level. See "Mute-Dependent Override" on page 78 for details on these modes. A correct override input sequence forces the scanner's OSSD outputs ON. The hazardous motion should not start until the initiation button (or hold to run switch) of the machine is also engaged. The override time limit is 120 seconds.
10. The **Input Signals** section, allows the configuration of the Multi In and unused Multi in/out pins depending on the configuration's needs.
    - **Reset**—The reset input function can be added in Automatic or manual reset mode. The reset input allows restoring normal operation after a failure lockout (fault) condition, due to system error, without disconnecting the power.
    - **Restart 1**—The restart input function is only added in manual reset mode. The restart input turns on the OSSD outputs after the blockage has been removed from the Safety Zone (and at startup).

© Banner Engineering Corp. All rights reserved.
www.bannerengineering.com

- **Restart 1 Reset**—This selection will perform on whichever input is needed at the moment (reset for faults, restart for manual reset situations).
- **EDM**—The EDM input function is only added if EDM is set to ON.
- **Muting Enable x**—A mute enable input may be added if muting is enabled (**Output Configuration** settings).
- **Muting x x**—Mute sensor inputs must be added if muting is enabled (**Output Configuration** settings).
- **Override x x**—Override inputs must be added if the override function is enabled.

This parameter group assigns the signals of the input functions to the scanner pins. Each pin is also associated with color-coded cable wiring, according to safety equipment regulations and standards. Previously assigned pins are grayed out.

Click on the white **>** arrow in the upper right corner to move to the next configuration screen. Click on the white **<** to return to the previous screen.

6.6.4 Detection Configuration

Use the **Detection Configuration** screen to define the Safety Zone and Warning Zone parameters.

Figure 66. Detection Configuration screen

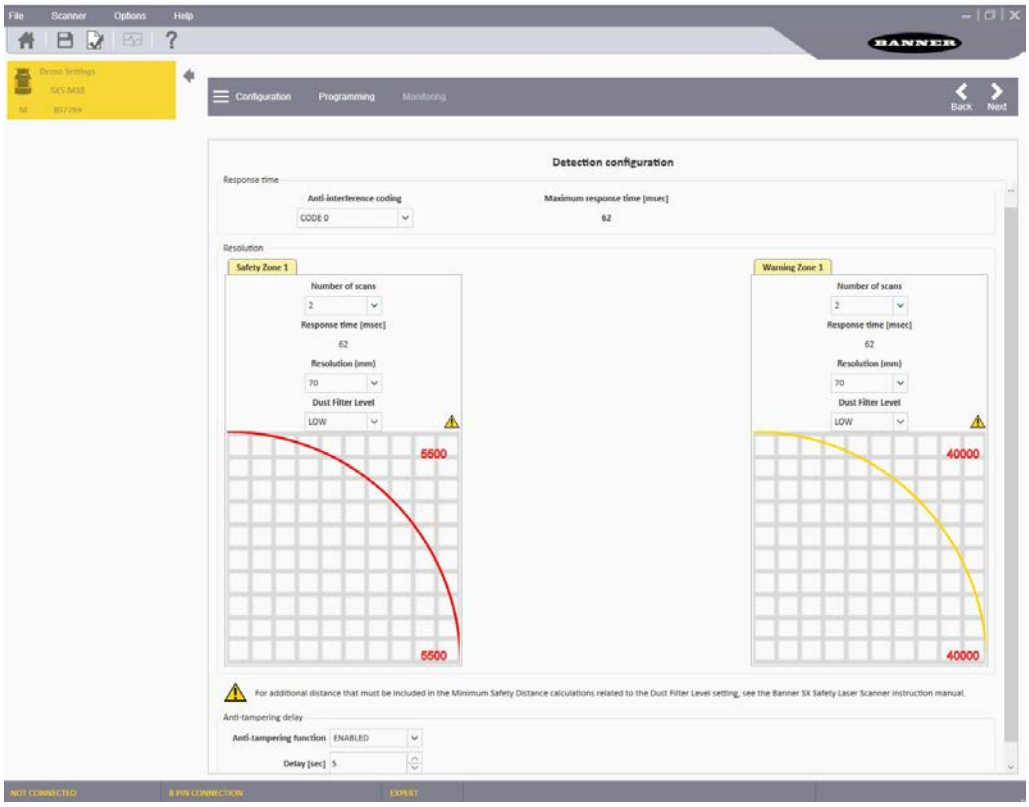

Response Time—Configure the response time settings for each scanner in the chain. The default scanner is the master. To configure the parameters for each remote unit simply click on it so that it is highlighted in the left-hand panel.

- Anti-Interference Coding—If multiple scanners are going to be used in an area, this parameter can select different scan codes for each scanner to reduce chances of scanner interactions. Changing the coding form zero will slightly increase the response time. See section 3.2.7 for more information on the Anti-Interference Coding feature.
- Maximum Response Time—This value cannot be changed by the user. It will display the expected worse case response time based on the various settings of the configuration (anti-coding level, number of scans and cascaded systems).

The response time of the cluster corresponds to the response time of the safety output of the device that goes into the STOP condition and the system latency time. If the device that goes into a STOP condition is the master, no system latency must be added. If a remote goes into a STOP condition, then the latency time (10 ms) must be added for each device to pass the off signal (if one remote ten 10 ms added for master to respond to the incoming off signal).

Resolution—Configure the resolution section for each scanner and each set of OSSDs selected previously. Safety Zone 1 corresponds to OSSDs 1, Safety Zone 2 corresponds to OSSD 2, and Safety Zone 3 corresponds to OSSD 3. Each scanner and each OSSD pair can have it own resolution settings.

© Banner Engineering Corp. All rights reserved.
www.bannerengineering.com

1. Set the **Number of Scans** required to validate detection of a Safety Zone intrusion.

   This parameter directly affects the Response Time, which is the time from when an object is detected in the Safety Zone to when the OSSD switches to the OFF-State.

   The **Response Time** (ms) is automatically generated based on the **Number of Scans** selected. Response time ranges from 62 ms to 1202 ms (482 ms for the SX5-B models), in 30 ms increments.
2. Set the **Resolution** (mm).

   This parameter sets the scanners detection resolution ability. The resolution does affect the maximum range of the scanner. The options are 30, 40, 50, 70, and 150 mm resolution (40 mm and 70 mm for the SX5-B model). The resolution selected will affect the maximum range, which is shown in the graph below the Dust Filter Level.
3. Set the **Dust Filter Level**.

   This parameter must be set according to different conditions specific to the application. In general, it is the sensitivity to various levels of airborne particles that affect the response of the scanner's detection abilities. Increasing the Dust Filter Level can increase the Minimum Safety Distance if certain lighting conditions exist. See "Dust Filtering" on page 35.

   

   CAUTION: Set the Dust Filter Level to the lowest value that still allows the machinery to work without detections from dust.

   - High—Use in dirty environments to filter (ignore) detection of airborne particles from being confused with objects to detect. The scanner is less sensitive to dust and therefore avoids shutting down the machinery unnecessarily.
   - Med—Use in environments where some airborne particles are present and can influence object detection.
   - Low—Use in cleaner environments where airborne particles have little effect on object detection.
4. Set these same parameters for the Warning Zone if a Warning Zone output is used.

   IMPORTANT:
   In addition to the level of airborne particles in the scanner's environment, some special lighting conditions also affect the detection sensitivity. These conditions are:
   - high reflective backgrounds within 3 meters of the Safety Zone boundary
   - the presence of bright light within +/- 5 ° of the detection plane.

   Include an additional distance in the Minimum Safety Distance calculations for these cases. See the graphs in the SX's instruction Manual for these additional distances.
5. **Anti-tampering delay**—Configure the functioning of the Anti-Tampering feature:
   - Anti-tampering function—Enable or disable (default is enabled) the scanner monitoring for no reflections
   - Delay (sec)—The delay from when the scanner first detects the lack of reflections to it enters the Anti-Tamper (off) state can be selected from 0 to 65,000 seconds (default is 5 seconds)

   NOTE: Disabling the function or selecting an activation time of longer than 5 seconds must be carefully evaluated by qualified personnel in charge of machine safety through a risk analysis (or risk assessment), which could lead to the introduction of additional safety measures.

Click on the white **>** arrow in the upper right corner to move to the next configuration screen. Click on the white **<** to return to the previous screen.

© Banner Engineering Corp. All rights reserved.
www.bannerengineering.com

6.6.5 Create or Edit Safety and Warning Zones

Figure 67. Zone Configuration screen

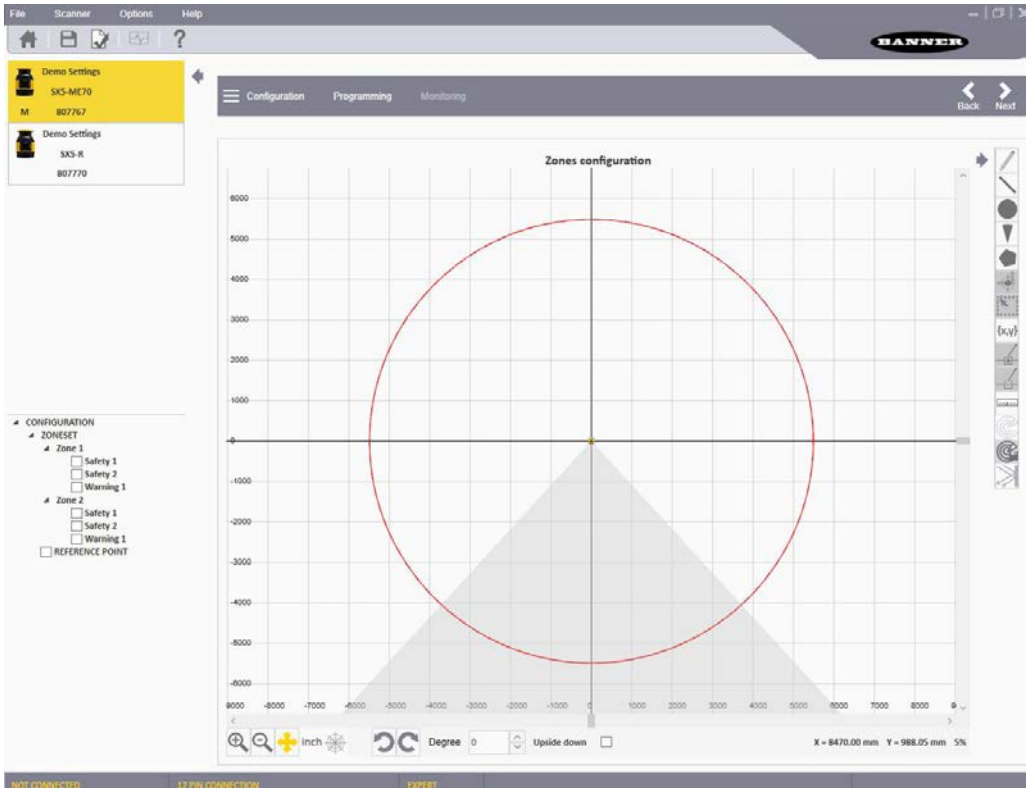

Zones must be created for each scanner in the chain. To select a scanner simply highlight it in the list shown in the left-hand panel.

A safety zone must be designed for each output configured for each scanner of the system. When multiple outputs are configured with more than one Zone set configured, Safety Area 2 and Safety Area 3 of all Zone Sets coincide and can only be modified from Zone Set 1 (or Zone Set 2 if Zone Set 1 is assigned the Shut Off function).

Tools are provided to draw the Safety and Warning Zones. It is possible to select different shapes and different functions to manage the graphing.

- On the right are the various configuration icons.
- On the left are a list of the various zones that can be configured.
- In the center is the area graph. The center of the scanner is the point where the two axes intersect.
- The icons below the graph allow you to change how the view is shown (zoom in/out, change the orientation of the scanner, etc).

1. In the left panel, first click on the desired scanner of the cluster, then click on the zone name to edit/create. Do not select the zone checkbox. The zone must be highlighted to be edited or displayed. If no zone is highlighted, Zone 1 - Safety is being created. To modify an existing zone, click on the zone in the graph.
2. Select the zone shape from the options on the right side of the screen.

   When modifying an existing zone, you may copy zone shapes between zones (Safety and Warning), move a zone shape between zones (Safety and Warning), edit a zone shape, or delete a zone shape.

   - **Free-Hand Zones**—Click on the pencil icon to free-hand draw the desired zone shape. Click and hold on the graph starting point (lowest point on either side of the scanner). Move around the scanner to map the outer edge of the zone. When the zone is complete release the mouse button.
   - **Line Zones**—Click the line icon to draw a triangular-shaped zone whose far edge is defined by the line. Then click and hold on the graph at the starting point of the line (lowest point on the right side of the shape or lowest point on the left side of the desired shape). Move up and left (or up and right) to draw a straight line. Release the left mouse button to finish the line.
   - **Circular Shaped Zones**—Click the circle icon to draw a circular-shaped zone. Click and hold the cursor on the graph. Moving the cursor in and out changes the size of the circle up to the maximum range of the unit. When the desired diameter is reached, release the mouse button.

© Banner Engineering Corp. All rights reserved.
www.bannerengineering.com

- **Arc Zones**—Click on the cone icon to draw a triangular-shaped zone whose far edge is defined by an arc (rounded not straight). Click and hold on the graph at the lowest left-hand starting point of the zone. Move to the right-side ending point of the zone and release the button.
- **Polygon Shaped Zones**—Click on the polygon icon to draw a polygonal-shaped zone. Click at the starting point of the desired polygonal zone. Move to the next edge transition point and click again. Keep clicking at the transition points. To finish the zone, double-click at the final point of the shape.
- **Numerically Generated Zones**—Click on the coordinate icon to numerically enter coordinates to create graphical zones. Coordinates for circles, lines, arcs, and polygons can be entered.

3. To edit the shape of a zone, left-click on the desired shape. Blue boxes display at each transition point. Click and hold on a box to move that transition point.

NOTE: Maintain a minimum distance of 40 mm between a Zone limit and fixed objects (e.g. walls).

6.6.6 Special Editing and Display Functions

Icon	Function
	Resizes a group of selected points. After a field has been created (and highlighted in the left-hand panel) click this icon, then click and hold on the graph. While holding the mouse button, move the mouse to create a box around the desired section that needs to be resized. When the mouse is released, the points that can be resized are shown in red. To resize, click and hold on one of these points and the entire area can be increased or decreased in size.
	Adds a new point to a shape. The new point must be inserted along the shape perimeter and can be used to edit the shape. After a field has been created (and is highlighted in the left-hand panel) click on this icon, then multiple points can be added to the perimeter of the shape (clicking). To stop, press the **ESC** key or click again on the icon. After these points have been added, they can be used to modify the shape by moving the points around.
	Deletes a point from a shape. After a field has been created (and is highlighted in the left-hand panel) click on this icon, then click the point(s) that should be removed from the perimeter of the shape. When all the desired points have been removed, click again on this icon or press the **ESC** key.
	Measures the distance between two points in a configuration. Click on the ruler icon, then click and hold on the starting point of the graph measurement. Move the mouse to the end point of the distance to be measured. As long as the left mouse key is pressed, the distance between the starting point and the location of the mouse is shown.
	Rotates the direction of the scanner by 45° in the direction of the arrow. Nothing physically changes; it makes the graph match the orientation of the scanner.
{upside-down box}	Flips the scanner over. The standard view has the top of the scanner at the center point. Clicking the Upside Down box puts the bottom of the scanner in the center of the graph. Nothing physically has changed but this allows the graph to match the orientation of the scanner.
	When a scanner is attached and any form of Live Monitoring is engaged, this icon can be selected. This causes the scanner to show any areas of high light input (a reflective surface or light source is being seen by the scanner). This can assist in removing potential interference sources from the environment. This icon can be used in the Monitoring mode and in Zone configuration when Live Monitoring is on.

6.6.7 Use Live Monitoring to Assign Safety and Warning Zones

NOTE: The Live Monitoring On, Use Live Monitoring to Draw Zone, and Show Reflective Object icons are only available if a scanner is online and has a configuration already loaded in it (Live Monitoring cannot be used as shipped from the factory; the scanner needs a configuration).

You may use the Live Monitoring function to outline the space the scanner is guarding, then go back and use shapes. Or you can use the Live Monitoring Area Assignment to set the fields in the detected area, up to the maximum range.

1. Click the icon to enter **Live Monitoring** mode.

   Live Monitoring scans and displays the area surrounding the scanner. The white area is free of obstacles and can be assigned to a Safety or Warning Zone. The gray areas contain detected obstructions.
2. Select the Safety Zone or Warning Zone in the left pane.
3. Click the Live Monitoring Area Assignment icon to assign the defined area to the selected zone.

© Banner Engineering Corp. All rights reserved.
www.bannerengineering.com

6.6.8 Protect a Vertical Area (Reference Points)

When the scanner is mounted to protect a vertical area (up and down), add Reference Points to an edge.

These reference points are positions where something will always be sensed by the scanner (the surface will always be present). These points are used by the scanner to ensure that it has not come loose from its mounting surface and is protecting the correct area. A minimum of three reference points must be added. A maximum of 15 reference points can be added. The angle between reference points must be at least 5 degrees.

1. To add a reference point, highlight Reference Point at the bottom of the list of Zones on the left.

   The reference point icon becomes live.
2. Click on the Reference Point icon on the right.
3. Click the locations of the desired Reference Points.

   The maximum distance from the scanner that a reference point can be configured is based on the maximum range for the selected resolution. The Reference Points do not have to be at the edge of the Safety Zone. If the distance to the reference point changes, the scanner will turn off. So even if the Safety Zone is muted, if the reference point gets blocked, the outputs turn off. Select the reference points so that they should not be blocked during a muting evolution.

6.6.9 Select and Visualize Areas on the Graph

Use the left-hand panel to select the areas to handle and manage on the graph (Safety, Warning, Muting, or Reference Points), and to select which of the series of scanners (master or specific remote) is shown and managed on the graph.

Figure 68. Selecting areas to manage

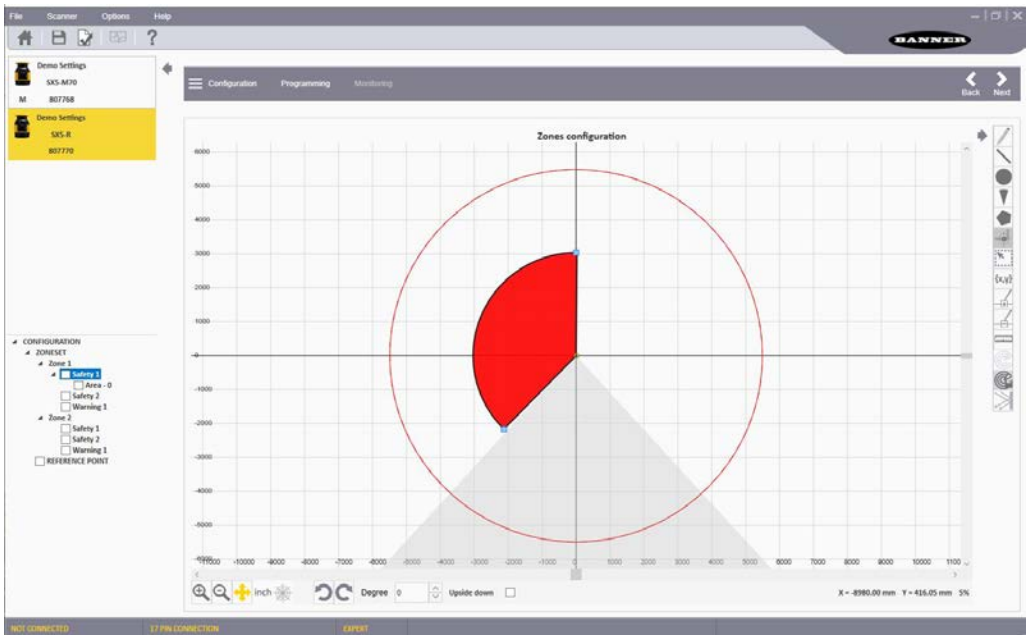

1. Select the desired scanner in the series by clicking on it, highlighting it.
2. Click on the label name (outside the check box) to highlight a specific area, e.g. a Safety or Warning Zone.
3. Clicking on the checkbox to select and edit a specific area and to show this area in the background.

   For example, click on the box of the safety area to assist in sizing the warning zone. The safety zone is shown as a shaded area.

© Banner Engineering Corp. All rights reserved.
www.bannerengineering.com

Figure 69. Selected area (shaded) and the area being defined

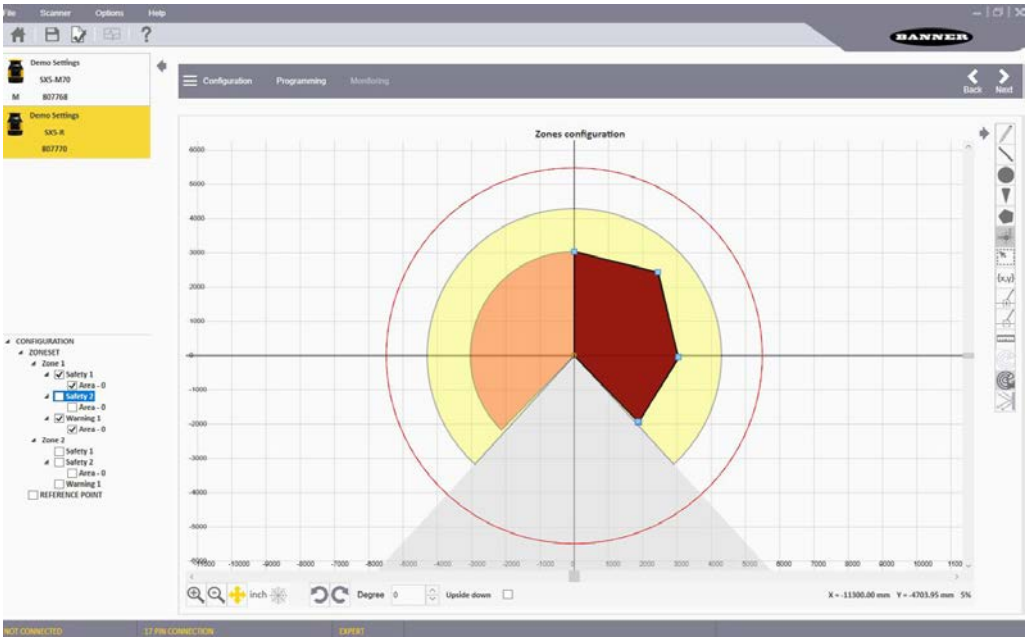

6.6.10 Connect a Scanner to a PC (Discover the Scanner)

Enter Discovery mode to have the software search the PC's network for any connected SXs.

Attach new scanners one at a time to the LAN because they all have the same default IP Address (192.168.0.10 and 192.168.0.11). After new IP addresses have been assigned (remember that each scanner uses 2 consecutive IP addresses), multiple units can be attached to the same network.

1. Enter **Discovery** mode using one of these three methods.
   - Click on **Programming**. After the configuration file is uploaded to the scanner, the software enters Discovery mode.
   - Go to the **Scanner › Discovery** menu.
   - From the **Task Selection** area, select **Modify Safety System Configuration** for a scanner on the network.

   If a pop-up windows appears asking to allow the configuration software access through the Windows Firewall, click **Accept**. If the window does not appear, verify that the firewall is set to allow the configuration software access. If access is not allowed, the scanner is discovered, but no information can be sent to or received from the scanner.

   > **NOTE:** If at anytime a notice pops up saying 'the scanner is busy' verify that the software has access through the Windows Firewall.

2. The configuration software displays the device with its own IP Address.
3. Double-click on the scanner to place it in the **Device Configuration Panel**.
4. Click on the white **>** in the upper right side on the main panel to proceed.

   A pop-up window suggests aligning the IP Address of the device with the computer LAN.
5. Click **OK** and enter the password (the default password is 'admin').
6. Change the IP Address parameters in the **Network Configuration** screen to align them with the computer LAN.

   > **IMPORTANT:** The displayed IP address is assigned to the SX. The successive address is also reserved because both internal micros have their own IP address. For example, if the displayed Scanner IP address is 192.168.0.10, the successive address of 192.168.0.11 is also assigned and cannot be used as the computer LAN IP address. If remote scanners are configured to the master, each remote scanner will reserve the next two IP addresses. For example, remote 1 reserves 192.168.0.12 and 192.168.0.13, remote 2 reserves 192.168.0.14 and 192.168.0.15, and remote 3 reserves 192.168.0.16 and 192.168.0.17.

© Banner Engineering Corp. All rights reserved.
www.bannerengineering.com

7. Click **OK** to accept the new IP Address parameters. When the device enters Offline status, click **OK** to continue.
   The configuration software automatically rediscovers the scanner with the new IP Address.
8. Double-click on the SX to enter **Programming**.

When a master scanner is attached at a firmware release 3.2 or greater with an attached remote with a firmware level prior to 3.2, selecting the white **>** icon results in the following warning:

Figure 70. Firmware Mismatch Alert Message

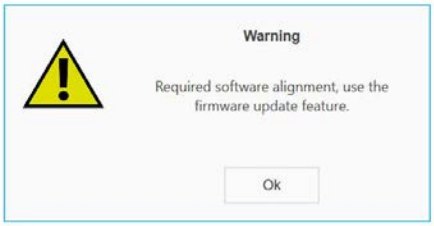

This warning means that a scanner in the chain requires a firmware update.

Aligning IP Addresses

Assuming the Subnet Mask is at the typical default setting of 255.255.255.0, the first three octets of the IP address must match (192.168.0 of the 192.168.0.10).

Change the scanner's IP address to match the LAN of the PC or change the PC's IP address to match the LAN of the scanner.

Connect to a Scanner (Point-to-Point)

It is possible to connect a configuration PC directly to a scanner using the Ethernet TCP/IP interface (point-to-point).

NOTE: This feature is not available with the SX5-B.

1. When connecting and using a scanner with your PC for the first time, see "Connect a Scanner to a PC (Discover the Scanner)" on page 101 to avoid any network conflicts in the Ethernet communications (all scanners have the same default IP address).
2. Go to the **Scanner** menu and select **Direct Connect**. If the scanner is on a distributed network and its IP address is known, it can be found via this method.
3. In the window that opens enter the scanner's IP address and select OK.
   If the scanner is found it (and any connected remote units) will show up in the left-hand panel.

© Banner Engineering Corp. All rights reserved.
www.bannerengineering.com

6.6.11 Validate and Accept the Configuration

Use the Programming screen to upload a configuration file to the scanner, generate a Safety Report, and validate the loaded configuration after the configuration is tested with the **Monitoring** function.

Figure 71. Programming screen

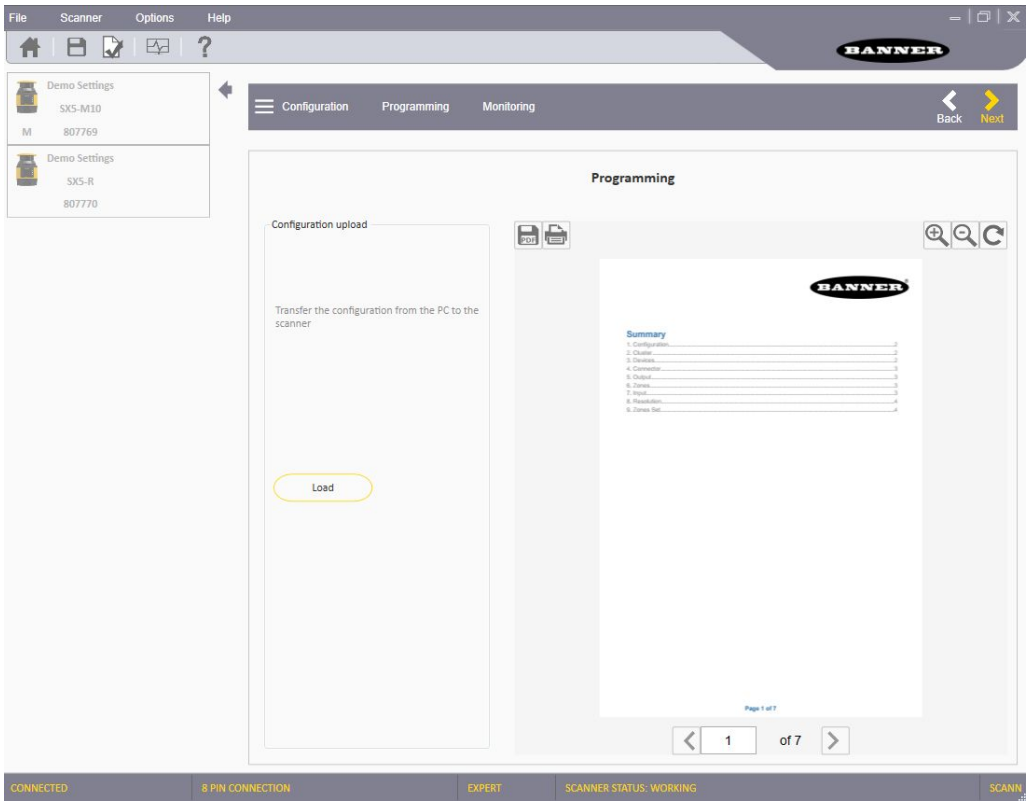

1. Click on **Programming** in the right window header, or use the white arrows on the right side to advance (or return) to the **Programming** screen.
2. In the **Configuration Upload** section, click **Load** to send the configuration to the scanner.
3. Enter the password (default is `admin`) when asked.

   While the configuration is loading the scanner enters an OFF state.
4. To validate the configuration:
   a. Enter **Monitoring** mode. After the new configuration is received by the scanner it will display the status icon on a white background. Even if the display shows the green GO icon, the outputs will stay off until the configuration is accepted.
   b. On the **Programming** screen, the Report file displays on the right. This report sums up the configuration steps with all the selected parameters. The Safety Report displays the new and previously used parameters (if editing an existing configuration, the previous parameters are in red).
5. Optional: Print the Safety Report or save the Safety Report to a PDF.
6. Accept or reject the configuration. If the configuration passes the testing and has been validated, accept it.

> **WARNING:** By validating (accepting) the configuration the responsible party takes on responsibility for the created configuration, accepting the hazard due to configuration errors.

After the acceptance is processed by the scanner, the display background returns to black. If the green GO icon is displayed, the outputs will turn on.

6.6.12 Load a Saved Configuration to a Scanner

Follow these instructions to upload a saved configuration file to a scanner.

1. Connect the scanner to the PC that has the configuration software installed.

© Banner Engineering Corp. All rights reserved.
www.bannerengineering.com

2. Launch the configuration software.
3. Align the scanner to the PC (discover the scanner and match the IP LAN). For more information, see "Connect a Scanner to a PC (Discover the Scanner)" on page 101.
4. Click **Home** to start at the home page of the configuration software and select **Open a Safety System Configuration from PC**.
5. Navigate to the desired file and select it.

   If the file being opened is for an SX5-B version 2.1.4, the software asks if you want to convert it to a new SX5-B6 format. If yes, select **yes**. If it should stay as an SX5-B format, select **no**.
6. Select **Programming** in the gray bar (starts the discovery process) and select the appropriate scanner.
7. When the appropriate scanner is shown in the panel to the right, select the white arrow in the upper right.

   The programming page opens.
8. Click **Load** and click **OK** to the notice that the configuration was validated.
9. Enter the password (default password is admin) and click **OK** for the warning that the device will switch off.

   The configuration will start to load into the scanner. This can take up to two minutes.
10. After the programming has finished loading, perform a field validation. For more information, see "Validate and Accept the Configuration" on page 103.
    - If the configuration is deemed safe, finish loading the configuration by clicking **Accept**.
    - If the configuration is not deemed safe, click **Reject** to return to the previous configuration.

    The process may take up to one minute to finish.

6.6.13 Monitor the Scanner

When in the **Monitoring** mode, the graph displays the current working area of the scanner. Use this function to verify that the designed Safety and Warning Zones are designed correctly (provide the desired protection).

This function is also used to watch the functioning of the scanner during operation. The **Monitoring** function is only available when an online scanner has been selected.

> **TIP:** If you click on **Monitoring** and receive a message that the scanner is busy, verify that the software has access through the Window's firewall.

With the Monitoring function, the following information can be checked:

- OSSD status (on/off)
- Connector pin assignment (colors and functions)
- Locations of objects in the field of view of the scanner (in the Safety and/or Warning zones)
- Diagnostic errors that caused the OSSDs to turn off
- Surrounding area detected by the scanner in real time
- Switching of the Zone Sets
- Configured parameters
- Presence of reflective surfaces and/or light sources (if selected)
- Response time
- Encoder speed readings

On the left panel, the software displays the scanner status (if it is currently functioning). It is also possible to view some parameters like response time by clicking on the Parameters icon, view pin assignments by clicking on the Connector icon, or view fault information by clicking on the Diagnostic icon.

The following icons, located on the right side of the graph, allow the users to manipulate the display.

Icon	Function
	Saves the Monitoring information into a .txt file
	Shows areas of high light input areas (reflective surfaces or light sources are being seen by the scanner)

Continued on page 105

© Banner Engineering Corp. All rights reserved.
www.bannerengineering.com

Continued from page 104

Icon	Function
	Moves the graph origin on the page. After clicking on the button, click and hold on the graph to move it around (up, down, right or left). After you position the graphic, release the mouse button. Click on the icon again to set the location.
	Toggles the graph polar (r, θ) and Cartesian (x, y) coordinates.
inch	Toggles the graph unit of measure between mm and inches.
	Zooms in on the graph.
	Zooms out on the graph.
	Rotates the scanner on the graph 45 degrees in the direction of the arrow.
Upside down	Flips the scanner upside down to change the view orientation of the scanner.

6.6.14 Save a Configuration File

After a configuration is complete or even partially created, you may save your file to your hard drive.

1. Go to **File › Save**.
2. Browse to the location on your hard drive to save the file to.
3. Name your configuration file.
4. Click **Save**.

6.6.15 Edit an Existing Configuration

1. To edit an existing configuration on your hard drive, follow these steps:
    a. In the software, select the file folder icon or go to **File › Open Safety System Configuration from PC**.
    b. Browse to the file location on your hard drive and select it.
    c. Click **Open**.
2. To edit an existing configuration on a Scanner on the network, follow these steps:
    a. In the software, click on **Modify a Safety System Configuration from a Scanner on the Network**. The software enters **Discovery** mode to search for all connected scanners. The software opens and displays the device with its IP Address (default is 192.168.0.10).
    b. Double-click the discovered device to place it in the **Device Configuration** panel.
    c. Click on the white **>** arrow to advance to the next screen.
    d. If the IP Address has not been changed, a pop-up window suggests changing the IP Address of the scanner to that of the computer LAN. Click OK to proceed and insert the scanner password (default password is `admin`).
    e. Change the IP Address parameters in the **Network Configuration** window to match them to the computer LAN. The scanner reserves the successive IP address for internal functions (both internal micros have their own IP Address but you access them using the assigned address). If remote scanners are attached to the master, each remote scanner will reserve the next two successive IP addresses for its micros.
    f. Click **OK** to accept the new IP address. The device enters the Offline status.
    g. Click **OK** to continue.
    h. The software automatically rediscovers the scanner at its new IP Address. Double-click on the scanner to modify the configuration.
3. Click on the white **>** arrow to move to the configuration screens, edit the configuration, or to upload the configuration to a scanner.

6.6.16 Wink Function

Use the Wink function to recognize which device is to be configured when multiple devices are found on the network.

To activate the Wink function, click on the **Wink** button when the device is in **Discovery** mode. The **Wink** icon displays. An individual scanner, a cascade chain of scanners, or a specific scanner in a cascade string can be selected to Wink.

© Banner Engineering Corp. All rights reserved.
www.bannerengineering.com

Figure 72. Wink button



Figure 73. Wink icon blinks on/off on the unit's display



Figure 74. Wink button blinks



The scanner's display will flash the Wink icon for approximately 30 seconds. After the specific scanner that is Winking is found, the Wink function can be ended by pressing the square button next to the display. If a chain of scanners was selected, each scanner in the chain will require the square button to be pressed to end the Wink process or just allowing the 30 seconds to expire.

6.7 Print the Safety System Report

A scanner configuration's Safety System Report contains the following information:

- Configuration Administrative Parameters
- Scanner Identification
- Wiring information
- Outputs selected
- Zone(s) selected
- Input(s) selected
- Detection Parameters
- Zone Sets (graphic display of fields)

After the configuration has been uploaded to the scanner, the report is generated. To print out your report, follow these steps.

1. Access the Safety System Report.
    - Go to the **Programming** screen after loading a configuration into a scanner
    - From the software's home screen, select **Read a Safety System Report from a Scanner on the Network**
    - From the software's home screen, select **Read a Safety System Report from PC**
2. Select the appropriate icon to either print the report to a printer or to a PDF file.

6.8 Change the Password

To assign or change a scanner's password, the device must be connected (online).

1. Verify the scanner is selected in the software (displays in the right panel).
2. Go to the **Scanner › Select Settings › Change Access Control** menu.
3. When asked, enter the current password.
4. Enter the new password (twice) then choose the password type.
    - Write Only—Required only when loading the configuration to a scanner
    - Read/Write—Required when connecting and when loading a configuration
    - None—Allows the user to enter monitoring but not to make any changes

© Banner Engineering Corp. All rights reserved.
www.bannerengineering.com

Click **OK**.

6.9 Reset the Password

To reset a forgotten or lost password, the device must be connected (online).

1. Verify the scanner is selected in the software (displays in the right panel).
2. Go to the **Scanner › Settings › Reset Password** menu.
3. Contact Banner Engineering Technical Support and send the serial and the magic number shown.

   The "magic number" is based on the run-time of the scanner, so this number is time sensitive. To contact the Safety Application Engineering, call Banner's North American headquarters at 763-544-3164 or 1-888-373-6767 (toll free).

   A new password will be given to you.

6.10 Configure a Static IP Address

To connect a device to the software using the Ethernet TCP/IP interface, match the Ethernet IP Addressing parameters between the configuration PC and the scanner.

The default scanner static assignment Ethernet IP Address is: 192.168.0.10. The successive IP Address is reserved for internal scanner functions (for example, 192.168.0.10 and 192.168.0.11 are used by the scanner). If a Master is configured into a cascade chain with a number of remote scanners, each remote scanner will reserve the next two IP addresses (two addresses for one remote, four addresses for two remotes, or six addresses for three remotes).

1. Before changing the Ethernet network settings on the PC running the software, close any open applications that use network resources (email, web browsers, etc).
2. On the PC, go to the **Control Panel** and select **Network and Sharing Center**.
3. Click on the **Local Area Connection** link and open the properties window.
4. Select **Internet Protocol Version 4 (TCP/IPv4)** and open the properties window.
5. Set the **IP address** fields.

   For example, set the **IP address** to: `192.168.0.38` (the 38 can be any address other than ones used by a scanner). Leave the **Subnet mask** to 255.255.255.0.
6. Click **OK** to save.

6.11 Perform a Factory Reset

Perform a factory reset to reset the password, password access control, scanner IP address, and internal configuration back to the factory (default) settings.

> **NOTE:** This feature is not available with the SX5-B.

1. Verify the scanner is selected in the software (displays in the right-hand panel).
2. Go to the **Scanner › Settings › Factory Reset** menu.

   A popup window warns the user that all the devices of a cascade chain (cluster) will be restored to the factory configuration and the current configuration will be lost.
3. Click **OK**.

   A popup window displays.
4. Enter the scanner password (default password 'admin', if it has not been changed).

   A popup window informs the user that the operation will take a few minutes and all devices will be restarted.
5. Click **OK**.

   After the scanners have been reset back to factory default settings, the **Getting Started** page appears and the scanner(s) show the **Waiting Configuration** message.

© Banner Engineering Corp. All rights reserved.
www.bannerengineering.com

Chapter Contents

7.1 Status Indicators 108
7.2 Display Menu 108
7.3 Resetting the System 109

Chapter 7 Operating Instructions

7.1 Status Indicators

The SX has three buttons, a graphical display, and five status LEDs (located below the display).

The SX has diagnostic LEDs for initial diagnostics. The OFF state and ON state LEDs are below the scanner's display. When it is not possible to see the display because of the way it was mounted or because it is hidden from the operator's position, use the software's **Monitoring** function to check the status.

Figure 75. Status LEDs



Symbol	Meaning
1	LED 1: Object Detection in Safety Zone (OSSD 11/12) Red—Object detected in the Safety Zone Green—No object is detected in the Safety Zone
2	LED 2: not available
3	LED3: Assigned to Warning Zone 2 Amber—Object detected in Warning Zone 2 OFF—No object detected in Warning Zone 2
	LED 4: Assigned to Warning Zone 1 Amber—Object detected in Warning Zone 1 Off—No object detected in Warning Zone 1
In	LED 5: Interlock Amber—Interlock function active (waiting for a restart signal)
	Button 1: to browse quickly the Menu functions (up)
	Button 2: to enter and confirm the selected function
	Button 3: to browse quickly the Menu functions (down)

7.2 Display Menu

To enter the Display menu, push the square button. The display supplies information about the status of the scanner and for diagnostics and troubleshooting. The menu is divided into three main areas (Information, Settings, and Exit). Use the up and down arrow buttons to browse the menu structure.

- **Information**—Accesses the hardware and configuration options
  The available hardware information is Device Name, Model, Part Number, Serial Number, Firmware Version, and Device Lifetime (run-time in hours).

  The available Configuration information is Configuration Name, Safety Signature, Last Configuration Date, Main IP Address (first IP address), and MAC Address.
- **Settings**—Accesses Display Settings and Reset options
  Rotate the display 180 degrees under the **Display Settings**.

© Banner Engineering Corp. All rights reserved.
www.bannerengineering.com

Reset the scanner (similar to a power cycle) under the **Reset** option.

- **Exit**—Select **Exit** and push the square button to exit the menu option

Use the display during special operations such as when replacing the window, replacing a scanner (master units), or replacing a Memory Device.

7.3 Resetting the System

Perform system resets and scanner restarts using an external reset switch. If supervisory control of the reset/restart switch is required, a key switch may be used, with the key kept in the possession of a Designated or Qualified Person.

Using a key switch will also provide some level of personal control, since the key may be removed from the switch. This will hinder a reset/restart while the key is under the control of an individual, but must not be relied upon solely to guard against accidental or unauthorized reset. (Spare keys in the possession of others or additional personnel entering the safeguarded area unnoticed may create a hazardous situation.)

Any Multi-in or Multi-in/out pin can be configured as a reset/restart input if needed in a configuration.

The SX requires a manual restart to clear a Start/Restart Interlock condition and resume operation following a stop command. Internal Lockout conditions also require a manual reset to return to Run mode after the failure has been corrected. A reset results in the scanner performing all of its startup tests. The scanner will be offline for approximately 40 seconds.

To reset/restart the SX, close the reset/restart switch for 0.5 to 4.5 seconds and then open it. Closing the reset/restart switch too long causes the sensor to ignore the reset/restart request.

7.3.1 Reset Signal Function

There are two internally controlled states between the stop and restart of the scanner:

- Interlock ON: Device can be restarted to its normal function because the detected object has been removed from the Safety Zone
- Interlock OFF: Device is off because the object has not been removed from the Safety Zone

The Interlock ON will be signaled by the LED 5 (right LED under the device display) turning amber and the display showing Restart inside a circle.

The manual reset input must be connected to +24 V dc via a Normally Open switch contact.

© Banner Engineering Corp. All rights reserved.

Chapter Contents

8.1 Periodic Checkout Requirements....110
8.2 Schedule of Checkouts....110
8.3 Perform a Commissioning Checkout....111
8.4 Daily Checkout Procedure....113
8.5 Semi-Annual Checkout Procedure....113

Chapter 8 Checkout Procedures

8.1 Periodic Checkout Requirements

This section lists the schedule of checkout procedures and describes where each procedure is documented. Checkouts must be performed as described. Results should be recorded and kept in the appropriate place (for example, near the machine, and/or in a technical file).

Banner Engineering highly recommends performing the System checkouts as described. However, a Qualified Person (or team) should evaluate these generic recommendations, considering their specific application, and determine the appropriate frequency of checkouts. This will generally be determined by a risk assessment, such as the one contained in ANSI B11.0. The result of the risk assessment will drive the frequency and content of the periodic checkout procedures and must be followed.

At every shift change, power-up, and machine setup change, perform the Daily checkout. This checkout may be performed by a Designated or Qualified Person (see the Daily Checkout Card for the procedure).

Semi-annually, the Scanner and its interface to the guarded machine should be thoroughly checked out. This checkout must be performed by a Qualified Person (see the Semi-Annual Checkout Card for the procedure). A copy of these test results should be posted on or near the machine.

When changes are made to the System (either a new configuration of the Scanner or changes to the machine), perform the Commissioning Checkout.

WARNING:
- Verify the proper operation of this SX Series Safety Laser Scanner
- Failure to verify the proper operation, on a regular basis, can result in undetected problems, which if not corrected, can result in serious injury or death.
- It is the user's responsibility to verify proper operation on a regular basis.

Study each procedure in its entirety, to understand each step thoroughly before beginning. Refer all questions to a Banner applications engineer (see "Contact Us" on page 142). Checkouts must be performed as detailed and results must be recorded and kept in the appropriate place (e.g., near the machine, and/or in a technical file). This must include a printout of the SX's configuration and the shape of all Safety Zones.

Additional factors and checks may be required that are dependent on the application, machine, or local regulations and laws. A user risk assessment will determine what these additional factors and checks will be and should be incorporated with the checkouts below. For easy reference, print out the procedures and post them near the machine/application.

8.2 Schedule of Checkouts

Checkout cards and this manual can be downloaded at http://www.bannerengineering.com.

Checkout Procedure	When to Perform	Where to Find the Procedure	Who Must Perform the Procedure
Trip Test	At Installation Any time the SX, the guarded machine, or any part of the application is altered.	"Perform a Trip Test" on page 71	Qualified Person

Continued on page 111

© Banner Engineering Corp. All rights reserved.
www.bannerengineering.com

Continued from page 110

Checkout Procedure	When to Perform	Where to Find the Procedure	Who Must Perform the Procedure
Commissioning Checkout	At Installation When changes are made to the SX (for example, either a new configuration of the SX or changes to the guarded machine).	"Perform a Commissioning Checkout" on page 111	Qualified Person
Shift/Daily Checkout	At each shift change Machine setup change After the SX is powered up During continuous machine run periods, this checkout should be performed at intervals not to exceed 24 hours.	**Daily Checkout Card** (Banner p/n 208912) A copy of the checkout results should be recorded and kept in the appropriate place (for example, near or on the machine, in the machine's technical file).	Designated Person or Qualified Person
Semi-Annual Checkout	Every six months following SX installation, or after changes are made to the SX (either a new configuration of the SX or changes to the machine).	**Semi-Annual Checkout Card** (Banner p/n 208911) A copy of the checkout results should be recorded and kept in the appropriate place (for example, near or on the machine, in the machine's technical file).	Qualified Person

8.3 Perform a Commissioning Checkout

Perform the Commissioning Checkout procedure as part of the SX installation (after it has been interfaced to the guarded machine as described) or after changes are made to the system (either a new configuration of the SX system or changes to the machine).

Perform the Commissioning Checkout procedure after:

- Configuring the SX system with the configuration software
- Connecting the SX system to the control system or safety switching device
- Verifying the cover to the 4-pin M12 Ethernet connector is in place over the connector or a cable is securely connected

Record the checkout results and store on or near the guarded machine as required by applicable standards.

WARNING:

- There is a risk of unpredictable machine behavior at the initial start up of the machine.
- Failure to follow these instructions could result in serious injury or death.
- The Qualified Person must take precautions to ensure that no one is in or near the hazardous area during these safety system tests.

1. Examine the guarded machine to verify that it is of a type and design compatible with the SX system. For a list of appropriate and inappropriate applications, see "Appropriate Applications" on page 11.
2. Verify the SX system is configured for the intended application and all mounting hardware is secured.
3. Verify that the minimum safety (separation) distance from the closest hazard of the guarded machine to the Safety Zone(s) is not less than the calculated distance. See "Minimum Safety (Separation) Distance for Stationary Applications" on page 38 and "Mobile Applications" on page 43.
4. Verify that:
    a. Access to any dangerous parts of the guarded machine is not possible from any direction not protected by the SX system, hard guarding, or supplemental safeguarding; and
    b. It is not possible for a person to stand between or climb over/under the protected Field(s) and the dangerous parts of the machine, or stand on top of the SX system; or
    c. Supplemental safeguarding and hard guarding, as described by the appropriate safety standards, are in place and functioning properly in any space between the Safety Zone(s) and any hazard that is large enough to allow a person to be undetected by the SX system.
5. Verify that all reset switches are mounted outside and in full view of the guarded area, out of reach of anyone inside the guarded area, and that means of preventing inadvertent use is in place.
6. Examine the electrical wiring connections between the Scanner OSSD outputs and the guarded machine's control elements to verify that the wiring meets the requirements stated in "Electrical Connections" on page 52 and "Electrical Connections to the Guarded Machine" on page 53.

© Banner Engineering Corp. All rights reserved.
www.bannerengineering.com

7. Remove all obstructions from the Safety Zone(s). Apply power to the SX system. Verify that power to the guarded machine is off.
    - **If the SX system is configured for Start Interlock (Manual Power-Up)**, LED 1 will show green, LED 5 will be on and the display shows RESTART (Interlock 1). Perform a manual reset (close the reset switch for 0.5 to 4.5 seconds, then open the switch) to turn on the OSSD outputs.
    - **If the SX system is configured for Automatic Start (Automatic Reset)**, LED 1 will show GREEN and the display will show GO, and the OSSD outputs turn on (after the restart delay time).
8. Observe the Diagnostic Display on remote scanner displays also (if configured).
    - **Lockout**—Lockout information listed on the display.
    - **Safety Zone interrupted**—Red STOP shown on display with direction of interruption also red.
    - **Safety Zone Clear and OSSDs on**—Green GO shown on the display.
    - **Start/Restart Interlock (OSSDs off, waiting for reset)**—Restart in a circle with Interlock below it shown on the display.
9. An interrupted Safety Zone (SZ) condition indicates that one or more objects are being detected within the active protected Zone. To correct this situation, identify the interruption using the software's **Monitoring** mode or by observing the area covered by the Safety Zone, and then remove all objects or realign the SX system. If the system is in a Start/Restart Interlock (waiting for Reset) condition, perform a manual reset.
10. After the display shows the green GO, perform the trip test ("Perform a Trip Test" on page 71) on each of the configured Safety Zones on all scanners to verify proper system operation and to detect possible unmonitored areas. Verify that if the Safety Zone boundary is identified (for example, marked on the floor), that it matches the corresponding Safety Zone. Do not continue until the SX system passes the trip test. Do not expose any individual to any hazard during the following checks.



WARNING:
- Before applying power to the machine, verify the area is clear.
- Failure to follow these instructions could result in serious injury or death.
- Verify the guarded area is clear of personnel and unwanted materials (such as tools) before applying power to the guarded machine.



WARNING:
- If the trip test fails, do not use the system.
- Failure to follow these instructions could result in serious injury or death.
- If the SX system does not respond properly to the trip test, do not attempt to use the system. If this occurs, the SX system cannot be relied on to stop dangerous machine motion when a person or object enters the Safety Zone.

11. Apply power to the guarded machine and verify that the machine does not start up. Interrupt the Safety Zone with the appropriate test piece (whose size matches the configured resolution) and verify that it is not possible for the guarded machine to be put into motion while the Safety Zone is interrupted. Repeat for each configured Safety Zone.
12. Initiate the machine cycle or motion of the guarded machine or mobile vehicle. While it is moving, use the appropriate test piece to interrupt the Safety Zone. Do not attempt to insert the test piece into the dangerous parts of the machine or directly in the path of the moving vehicle. Upon interrupting the Safety Zone (at any point), verify that:
    a. **For stationary applications**: The dangerous parts of the machine come to a stop with no apparent delay. Remove the test piece from the Safety Zone; verify that the machine does not automatically restart, and that the initiation device(s) must be engaged to restart the machine.
    b. **For mobile applications**: The vehicle stops within the identified/predetermined distance. Remove the test piece from the Safety Zone; verify that the vehicle does not unintentionally restart, and, if required, that the initiation device(s) must be engaged to restart the mobile vehicle. This must be accomplished at numerous points along the entire route (for example, testing each of the Field Pairs in the configuration).
13. Remove electrical power to the SX system. Verify that all OSSD outputs immediately turn off and the machine is not capable of starting until power is re-applied to the SX system.
14. Test the machine stopping response time, using an instrument designed for that purpose, to verify that it is the same or less than the overall system response time specified by the machine manufacturer.
15. If the Ethernet cable is removed, ensure the cover is tightly in place.

Do not continue operation until the entire checkout procedure is complete and all problems are corrected.

© Banner Engineering Corp. All rights reserved.
www.bannerengineering.com

WARNING:

- Do not use the machine until the system is working properly.
- Attempts to use the guarded machine if these checks cannot be verified could result in serious injury or death.
- If all these checks cannot be verified, do not attempt to use or operate the machine until the defect or problem has been corrected.

8.4 Daily Checkout Procedure

Perform the Daily Checkout procedure at every shift change, power-up, and machine set-up change – and at intervals not to exceed 24 hours during continuous machine run periods. Record a copy of the checkout results and store in the appropriate place (e.g., near or on the machine, in the machine's technical file).

Tester: Designated Person or Qualified Person.

Refer to the procedure contained on the Daily Checkout card (Banner p/n 208912) downloaded from www.bannerengineering.com. Print out the instructions to be posted near the installation/guarded machine, for easy reference.

8.5 Semi-Annual Checkout Procedure

Perform the Semi-Annual Checkout procedure every six months following system installation, or whenever changes are made to the SX configuration or to the machine. A copy of checkout results should be recorded and kept in the appropriate place (e.g., near or on the machine, in the machine's technical file).

Tester: Qualified Person.

Refer to the procedure contained on the Semi-Annual Checkout card (Banner p/n 208911) downloaded from www.bannerengineering.com. Print out the instructions to be posted near the installation/guarded machine, for easy reference.

© Banner Engineering Corp. All rights reserved.
www.bannerengineering.com

Chapter Contents

9.1 Initial Troubleshooting Steps 114
9.2 Troubleshooting Lockout Conditions 114
9.3 Display Icons 115
9.4 Diagnostic Notes, Warnings, and Errors 115
9.5 Safety 122
9.6 Check for Sources of Electrical and Optical Noise 123

Chapter 9 Troubleshooting

9.1 Initial Troubleshooting Steps

The SX uses three diagnostics levels to quickly resolve errors. Follow these steps to resolve an error.

WARNING:
- Remove power from the machinery before servicing it.
- Servicing the SX while the hazardous machinery is operational could result in serious injury or death.
- The machinery to which the Scanner is connected must not be operating at any time during major service or maintenance. This may require lockout/tagout procedures (refer to OSHA1910.147, ANSI Z244-1, or the appropriate standard for controlling hazardous energy).

1. Determine the SX's status, signaled via LEDs and the Diagnostic Display.
2. Remove the errors with the specified measures listed in the diagnostic key.

9.2 Troubleshooting Lockout Conditions

WARNING:
- Power failures and Lockout conditions indicate a problem
- Attempts to continue to operate machinery by bypassing the SX or other safeguards is dangerous and could result in serious injury or death.
- Power failures and Lockout conditions indicate a problem and must be investigated immediately by a Qualified Person.

A Lockout condition causes all the SX OSSD outputs to turn or remain off, sending a stop signal to the guarded machine. Diagnostic error codes are available to assist in the identification of the cause(s) of lockouts.

The SX provides easy methods for determining operating problems. The Lockout condition is indicated by the display showing a red box with a symbol and error code listed in it.

To recover from a Lockout condition:

1. Correct all errors.
2. Perform the reset routine or cycle power to the SX (power the SX down, wait five to 10 seconds, then power it up).

© Banner Engineering Corp. All rights reserved.
www.bannerengineering.com

9.3 Display Icons

Configuration Accepted	Configuration Not Accepted	Name	Description
		Device On	The device is correctly functioning. No objects are detected in the Warning Zone or Safety Zone.
		Warning Zone Signal	The device is correctly functioning. The device has detected an object in the Warning Zone.
		Safety Zone Signal	The device is correctly functioning. The device has detected an object in the Safety Zone.
		Reference Point Signal	Reference points have moved. The display sector in the direction of the moved point is shown in blue.

NOTE: In the configuration not accepted state, the OSSDs will be off even if the display says GO (safety zone clear). The configuration must be accepted before the OSSDs will turn on.

9.4 Diagnostic Notes, Warnings, and Errors

Icon	Fault Code	Device Status	OSSD Status	Description
	DLDNF	Normal	Off	Downloading new firmware.[9]
	DLDNC	Normal	Off	Downloading new configuration.[9]
	CLEANW2	Normal	On	Clean the window and the scatter guard (the surface under the yellow cap on top of the scanner) to avoid a lockout condition. To clean, use an anti-static solution and wipes (see "Accessories" on page 124).

Continued on page 116

[9] * If the scanner software gives a Configuration update Error during a configuration load and the scanner display continues to show one of these fault codes, check to ensure you have allowed 2 IP addresses per scanner (which is required). Power to the scanner must be cycled to restore it to operation.

© Banner Engineering Corp. All rights reserved.
www.bannerengineering.com

Continued from page 115

Icon	Fault Code	Device Status	OSSD Status	Description
	ITLOCKx	Normal	Off	Interlock; waiting for a restart signal to turn the relevant OSSDs back on.
	INTF6	Normal	On	Non-safety related internal test failure. Reset the system using the reset function or cycle the power to the device. Using a separate filtered power supply and/or a grounded shielded cable to connect the scanner to the cabinet can eliminate external causes of the failure. If the failure persists, contact the factory for support.
	BOOTF	Normal	Off	Invalid boot. Re-boot the system until the normal condition is restored. If warning persists, contact the factory for support.
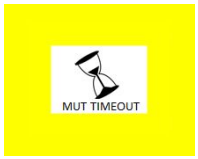	MUT TIMEOUT	Normal	On	Muting has expired because it is maintained beyond the maximum timeout time.
	MUTING ERR	Normal	On	Muting has not activated because the correct sequence was not followed.
	MUTING	Normal	On	The Muting function is active. If a Mute Lamp output is configured, it should be flashing.
	OVERRIDE ERR	Normal	On	Override has not been activated because the correct sequence has not been followed or there are no override conditions.
	OVERRIDE	Normal	On	The Override function is active. If a Mute Lamp output is configured, it should be flashing.
	OVERTEMP	Normal	On	The unit is operating above or below its allowed operating temperature range. Restore the proper ambient temperature to ensure proper operation of the scanner.

Continued on page 117

© Banner Engineering Corp. All rights reserved.
www.bannerengineering.com

Continued from page 116

Icon	Fault Code	Device Status	OSSD Status	Description
	OVR TIMEOUT	Normal	On	The Override timeout function has expired.
	HIGH REFL-BKG	Normal	On	A high reflecting background is detected that could affect detection capability. Reduce or remove the reflecting background. (See "Light Interference" on page 33 and "Highly Reflective Backgrounds" on page 33.)
	CHECK MASTER	Normal	On	The remote unit is fine, but is reporting a problem with the master scanner. Check the master unit.
	WINDOW REPLACE	Normal	Off	Window replacement procedure is in progress
	WR FAILED	Lockout	Off	Window calibration failed. Repeat the procedures or change the window.
	COMMIT ON FIELD	Normal	Off	After window replacement, validate the original Safety Zone. After the validation, press the square button to commit that the field has been validated.
	SHUT-OFF	Normal	Off	Shut off function enabled.
	RES SHUT-OFF	Normal	Off	Shut off function is disabled.
	CLEANW1	Normal	Off	Clean the window, including the scatter guard under the lip of the top of the unit, until the normal condition is restored. If cleaning the window does not restore the device to a normal condition, replace the window or the damaged scanner. Contact the factory for support.
	INPUTCF1	Lockout	Off	Check Area Switch input connections. If more than one Zone is set, the input status has to match one of the configured Zone Sets. That includes the encoder-related speed zone sets. Cycle power or reset the scanner via the display or software. If this lockout occurs at power up, it could be caused by the scanner powering up faster than the Area Switch input control; there might be a need to delay the scanner powering up.

Continued on page 118

© Banner Engineering Corp. All rights reserved.
www.bannerengineering.com

Continued from page 117

Icon	Fault Code	Device Status	OSSD Status	Description
	INPUTCF2	Lockout	Off	Check Area Switch input sequence. Typically the problem is related to a non-simultaneous switching of the Area Switch inputs. This includes the encoder-related speed zone sets. Might need to increase the Input Delay Max setting in the software. Cycle power or reset the scanner via the display or software.
	OSSDF1	Lockout	Off	Check the OSSD connections or the integrity of the external switching device. If the failure persists, contact the factory for support.
	OSSDxF3	Lockout	Off	A short circuit to GND, +Vdc, or between OSSDs pairs has been detected. Check the OSSD connections or the integrity of the external switching device. If the failure persists, contact the factory for support.
	WAITING CONF	Lockout	Off	The scanner is waiting a configuration upon initial installation or after a factory reset.
	ALIGN SW REQ	Lockout	Off	The firmware of one of the scanners in the chain needs to be updated.
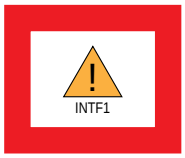	INTF1	Lockout	Off	Internal communication failure. Reset the system using the reset function or cycle the power to the device. Try using a separate filtered power supply and/or a grounded shielded cable to connect the scanner to the cabinet to eliminate external causes of the failure. If the failure persists, contact the factory for support.
	INTF2	Lockout	Off	Internal communication integrity test failure. Reset the system using the reset function or cycle the power to the device. Try using a separate filtered power supply and/or a grounded shielded cable to connect the scanner to the cabinet to eliminate external causes of the failure. If the failure persists, contact the factory for support.
	INTF3	Lockout	Off	Micro integrity test failure - RAM test. Reset the system using the reset function or cycle the power to the device. Try using a separate filtered power supply and/or a grounded shielded cable to connect the scanner to the cabinet to eliminate external causes of the failure. If the failure persists, contact the factory for support.
	INTF4	Lockout	Off	Micro integrity test failure - ROM test. Reset the system using the reset function or cycle the power to the device. Try using a separate filtered power supply and/or a grounded shielded cable to connect the scanner to the cabinet to eliminate external causes of the failure. If the failure persists, contact the factory for support.

Continued on page 119

© Banner Engineering Corp. All rights reserved.
www.bannerengineering.com

Continued from page 118

Icon	Fault Code	Device Status	OSSD Status	Description
	INTF5	Lockout	Off	Micro integrity test failure - internal peripheral test (safety relevent). Reset the system using the reset function or cycle the power to the device. Try using a separate filtered power supply and/or a grounded shielded cable to connect the scanner to the cabinet to eliminate external causes of the failure. If the failure persists, contact the factory for support.
	INTF7	Lockout	Off	Micro integrity test failure - Function and operation test. Reset the system using the reset function or cycle the power to the device. Try using a separate filtered power supply and/or a grounded shielded cable to connect the scanner to the cabinet to eliminate external causes of the failure. If the failure persists, contact the factory for support.
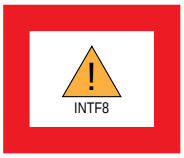	INTF8	Lockout	Off	Micro integrity test failure - Coherence check Up/Uw. Reset the system using the reset function or cycle the power to the device. Try using a separate filtered power supply and/or a grounded shielded cable to connect the scanner to the cabinet to eliminate external causes of the failure. If the failure persists, contact the factory for support.
	INTF9	Lockout	Off	Micro integrity test failure - Program coherence check/CRC failure. Reset the system using the reset function or cycle the power to the device. Try using a separate filtered power supply and/or a grounded shielded cable to connect the scanner to the cabinet to eliminate external causes of the failure. If the failure persists, contact the factory for support.
	INTF10	Lockout	Off	Micro-FPGA integrity test failure - Diagnostic test failure. Reset the system using the reset function or cycle the power to the device. Try using a separate filtered power supply and/or a grounded shielded cable to connect the scanner to the cabinet to eliminate external causes of the failure. If the failure persists, contact the factory for support.
	INTF11	Lockout	Off	FPGA integrity test failure - Internal self test failure. Reset the system using the reset function or cycle the power to the device. Try using a separate filtered power supply and/or a grounded shielded cable to connect the scanner to the cabinet to eliminate external causes of the failure. If the failure persists, contact the factory for support.
	INTF12	Lockout	Off	FPGA power supply supervisor failure. Reset the system using the reset function or cycle the power to the device. Try using a separate filtered power supply and/or a grounded shielded cable to connect the scanner to the cabinet to eliminate external causes of the failure. If the failure persists, contact the factory for support.
	INTF13	Lockout	Off	Measurement integrity test failure - Internal target coherence test. Reset the system using the reset function or cycle the power to the device. Try using a separate filtered power supply and/or a grounded shielded cable to connect the scanner to the cabinet to eliminate external causes of the failure. If the failure persists, contact the factory for support.
	INTF14	Lockout	Off	Temperature measurement integrity check - Coherence comparison of sensors. Switch off the scanner and check the temperature of the environment. Allow the scanner to cool for 10-15 minutes, then turn the scanner back on. If the failure persists, contact the factory for support.

Continued on page 120

© Banner Engineering Corp. All rights reserved.
www.bannerengineering.com

Continued from page 119

Icon	Fault Code	Device Status	OSSD Status	Description
	INTF15	Lockout	Off	Rotational speed coherence test failure. The speed of the rotating mirror inside of the scanner was measured outside the allowable range. The fault can be caused by vibrations, bumps, or rapid turning experienced by the scanner. If the failure persists, it is necessary to replace the device. Also can be seen when the firmware of a remote scanner is different than the master scanner's firmware.
	INTF16	Lockout	Off	Dust detector integrity failure. Reset the system using the reset function or cycle the power to the device. Try using a separate filtered power supply and/or a grounded shielded cable to connect the scanner to the cabinet to eliminate external causes of the failure. If the failure persists, contact the factory for support.
	INTF17	Lockout	Off	Power supervisory failure. Reset the system using the reset function or cycle the power to the device. Try using a separate filtered power supply and/or a grounded shielded cable to connect the scanner to the cabinet to eliminate external causes of the failure. If the failure persists, contact the factory for support.
	INTF18	Lockout	Off	Internal failure. This fault also occurs when a device in the master/remote cluster is replaced or removed (topology fault). If this is the case, connect to the configuration software and upload a new configuration that matches the topology. Reset the system using the reset function or cycle the power to the device. Try using a separate filtered power supply and/or a grounded shielded cable to connect the scanner to the cabinet to eliminate external causes of the failure. If the failure persists, contact the factory for support.
	INTF20	Normal	Off	Master/remote connection failure. Check the network connector of the integrity of the remote devices and restore normal network operation. The cable used must be an appropriate Ethernet cable. If the failure persists, contact the factory for support.
	ENC OUT OF FREQ	Lockout	Off	The input received from encoder 1 or encoder 2 exceeds the maximum pulse frequency (100 kHz). The scanner enters a lockout status after three consecutive out-of-frequency events.
	ENC ERROR	Lockout	Off	This error can occur if one of the following conditions is met: • The difference between the speed measures collected by encoder 1 and encoder 2 exceeds the encoder Δ (delta) beyond the allowable time window. • The encoders are not connected properly. If the problem persists, check the real integrity of the encoders or check for noise on the power supply connections of the encoders. Try to reduce any potential ground loops and minimize the length of cables as much as practical.
	REMOTE ERROR	Lockout	Off	The master scanner is signalling that one of the remote scanners is in a fault or error condition. Check the remote scanner's display for the fault code.

Continued on page 121

© Banner Engineering Corp. All rights reserved.
www.bannerengineering.com

Continued from page 120

Icon	Fault Code	Device Status	OSSD Status	Description
	EDM	Lockout	Off	EDM error. Check the connection of the EDM wire. Verify the delay setting matches the relay characteristics. If necessary, replace the relay. If the failure persists, contact the factory for support.
	ANTITAMPERING	Lockout	Off	The Anti-tamper function has been activated. See "Anti-Tamper Function" on page 34.
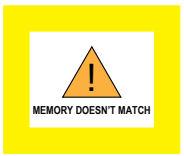	MEMORY DOESN'T MATCH	Boot	Off	Memory device does not match with the configuration. Replace the memory device with the correct model.
	MEMORY FAILURE	Boot	Off	Memory device failure. Create a new configuration using the software, perform a backup configuration from the master device, or replace the memory device.
	MEMORY EMPTY	Boot	Off	The memory device has no configuration stored on board. Create a new configuration using the software or perform a backup configuration from the master scanner.
	DEVICE EMPTY	Boot	Off	The master scanner has no configuration stored on board. Create a new configuration using the software or restore the configuration from the memory device.
	CFG NO MATCHING	Boot	Off	The device configuration does not match with the memory device configuration. Follow the instructions on the display in order to re-align the configurations by the RESTORE or BACKUP operation.
	INCOHERENCE	Boot	Off	The device found an incoherent configuration. Use the configuration software to create a new configuration.
	BKP IN PROCESS	Boot	Off	Fast replacement backup phase in progress. Wait, and do not push any buttons.
	BKP DONE	Boot	Off	Fast replacement backup phase completed.

Continued on page 122

© Banner Engineering Corp. All rights reserved.
www.bannerengineering.com

Continued from page 121

Icon	Fault Code	Device Status	OSSD Status	Description
	BKP FAILED	Boot	Off	Fast replacement backup phase failed. Try again, or create a new configuration using the configuration software.
	RES IN PROGRESS	Boot	Off	Fast replacement restore phase in progress. Wait, and do not push any buttons.
	RESTORE DONE	Boot	Off	Fast replacement restore phase completed.
	RES FAILED	Boot	Off	Fast replacement restore phase failed. Try again, or create a new configuration using the configuration software.
	RES VALIDATION	Boot	Off	The fast replacement restore phase needs to be validated by the user before returning to normal operation. After checking that the safety conditions have been restored, the user must push the button on the display to finish the process.
	RES ABORT	Boot		If the safety conditions have not been restored after the fast replacement phase, the user can abort the restore phase and create a new configuration using the software.

NOTE: If the display has a small red circle with an exclamation point in it, a warning exists but the middle button next to the display was pressed and suppressed the message. To see the hidden message, press the center square button again.

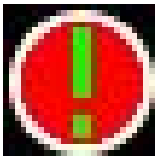

9.5 Safety

WARNING:

- **If the device is not working properly, personnel may not be detected.**
- Failure to follow these instructions could result in serious injury or death.
- Stop the machine operation if the machine behaves unpredictably or if the behavior cannot be identified.
- Stop the machine operation if you cannot identify or locate the fault or you cannot correct the fault.
- Secure the machine so that it cannot be unintentionally turned on.

© Banner Engineering Corp. All rights reserved.
www.bannerengineering.com

WARNING:

- **Do not start up the machine unexpectedly.**
- Failure to follow these instructions could result in serious injury or death.
- When any work is taking place, use the protective device to secure the machine or to ensure that the machine is not switched on unintentionally.

WARNING:

- **If the device is not working properly, personnel may not be detected.**
- Failure to follow these instructions could result in serious injury or death.
- Do not attempt to repair the device components.
- Do not make any changes to or tamper with the device components.
- With the exception of the procedures described in this document, the device components must not be opened.

IMPORTANT: If you cannot remedy the fault with the help of the information provided in this chapter, please contact the factory.

9.6 Check for Sources of Electrical and Optical Noise

The SX is designed and manufactured to be highly resistant to electrical and optical noise and to operate reliably in industrial settings. However, serious electrical and/or optical noise may cause a random OFF state of the OSSDs. In very extreme electrical noise cases, a Lockout is possible.

Do not directly ground the SX housing. Make only those connections as described in this document.

All SX wiring is low voltage. Running these wires alongside power wires, motor/servo wires, or other high-voltage wiring can inject noise into the SX. It is good wiring practice (and may be required by code) to isolate SX wires from high-voltage wires. The Banner model BT-1 Beam Tracker (see Banner catalog or website) is a very good tool for detecting electrical noise. It can be used to detect electrical transient spikes and surges.

If random nuisance noise problems occur:

1. Check for optical interference from adjacent safety laser scanners or other photoelectric sensors.
    a. Turn off the Scanner.
    b. Use a Banner BT-1 Beam Tracker to check for light at the SX front screen (window) by press the RCV button on the BT-1 and moving across the full length of the window with the BT-1 lenses facing away from the SX.
    c. If the BT-1's indicator lights up, check for light from other sources (e.g., other safety laser scanners) by tracking down the emitted light using the BT-1.
2. Check for sources of electrical noise.
    a. Turn off the Scanner.
    b. Cover the lens of the BT-1 with electrical tape to block optical light from getting into the receiver lens.
    c. Press the RCV button on the BT-1 and position the Beam Tracker on the wires going to the Scanner or any other nearby wires.
    d. To reduce or eliminate noise caused by the switching of inductive loads, install proper transient suppression across the load.
3. Try using a separate filtered power supply and/or a grounded shielded cable to connect the scanner to the cabinet to eliminate external causes of the nuisance noise.

© Banner Engineering Corp. All rights reserved.
www.bannerengineering.com

Chapter Contents

10.1 Cordsets 124
10.2 Brackets 125
10.3 Other Accessories 126
10.4 Universal (Input) Safety Modules 126
10.5 Safety Controllers 126
10.6 Interface Modules 126
10.7 Contactors 127

Chapter 10 Accessories

10.1 Cordsets

Double-Ended 4-pin M12 Male D-code to 8-Pin RJ45 Male Shielded Ethernet Cordsets				
Model	**Length**	**Dimensions**	**RJ45 Pinout (Male)**	**M12 Pinout (Male)**
STP-M12D-403	0.9 m (2.95 ft)	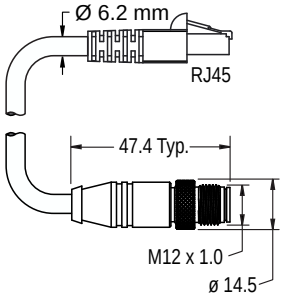	 1 = White/Orange 2 = Orange 3 = White/Blue 6 = Blue	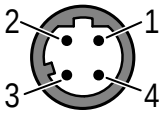 1 = White/orange 2 = White/blue 3 = Orange 4 = Blue
STP-M12D-406	1.83 m (6 ft)			
STP-M12D-415	4.57 m (15 ft)			
STP-M12D-430	9.14 m (30 ft)			

8-pin A-Code Single-Ended M12 Female Cordsets (datasheet p/n 235941)				
Model	**Length**	**Dimensions (mm)**	**Pinout (Female)**	
BC-M12F8-24-1	1 m (3.28 ft)	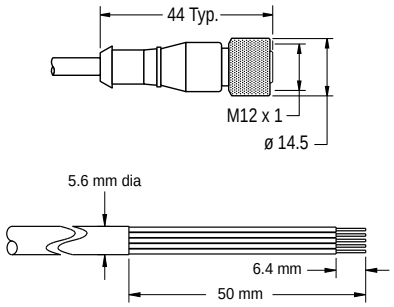	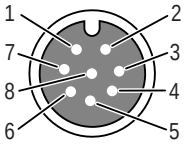	1 = White 2 = Brown 3 = Green 4 = Yellow 5 = Gray 6 = Pink 7 = Blue 8 = Red
BC-M12F8-24-2	2 m (6.56 ft)			
BC-M12F8-24-5	5 m (16.4 ft)			
BC-M12F8-24-10	10 m (30.81 ft)			

© Banner Engineering Corp. All rights reserved.
www.bannerengineering.com

8-Pin Double-Ended M12 Male Cordsets				
Model	**Length**	**Dimensions**		**Pinout (Male)**
SXA-DEE2M-810F	3 m (9.8 ft)	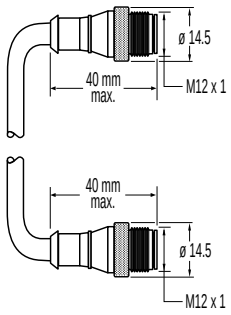	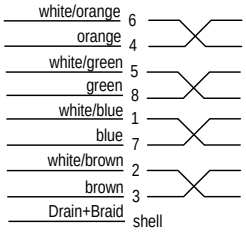	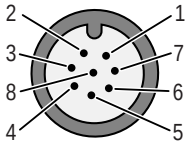
SXA-DEE2M-815F	5 m (16.4 ft)			1 = V_{pwr} 7 = V_{pwr} 6 = I/O_TX+ 5 = I/O_RX+ 4 = I/O_TX- 8 = I/O_RX- 2 = GND_ISO 3 = GND_ISO
SXA-DEE2M-830F	10 m (32.8 ft)			
SXA-DEE2M-850F	15 m (49.2 ft)			
SXA-DEE2M-880F	25 m (82 ft)			

12-Pin Single-Ended M12 Female Cordsets				
Model	**Length**	**Dimensions**	**Pinout (Female)**	
SXA-1215D	4.5 m (15 ft)	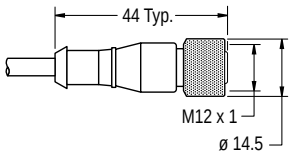	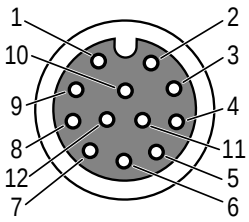	1 = Brown 2 = Blue 3 = White 4 = Green 5 = Pink 6 = Yellow 7 = Black 8 = Gray 9 = Red 10 = Violet 11 = Gray/pink 12 = Red/blue
SXA-1225D	7.6 m (25 ft)			
SXA-1250D	15.2 m (50 ft)			
SXA-12100D	30.4 m (100 ft)			

17-Pin Single-Ended M12 Female Cordsets				
Model	**Length**	**Dimensions**	**Pinout (Female)**	
SXA-1715D	4.5 m (15 ft)	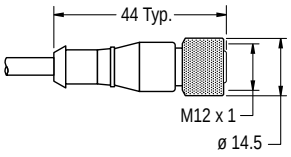	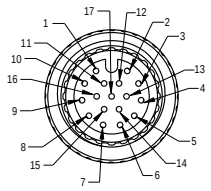	1 = Brown 2 = Blue 3 = White/Green 4 = Green 5 = White/Black 6 = Orange 7 = Black 8 = Pink 9 = Red 10 = White/Yellow 11 = Gray/pink 12 = Red/blue 13 = Gray 14 = White 15 = Yellow 16 = Yellow/Green 17 = Violet
SXA-1725D	7.6 m (25 ft)			
SXA-1750D	15.2 m (50 ft)			
SXA-17100D	30.4 m (100 ft)			

10.2 Brackets

All measurements are listed in millimeters, unless noted otherwise. The measurements provided are subject to change.

SXA-MBK-2 • Protection Bracket	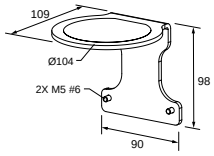

© Banner Engineering Corp. All rights reserved.
www.bannerengineering.com

SXA-MBK-1 • Pitch and Roll Angle Adjustment Bracket	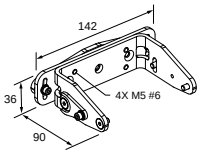

10.3 Other Accessories

Model	Description
SXA-CLN1	Cleaning kit with 1-quart spray bottle of surface and mat cleaner and 100 lint-free cloths
SXA-CLN2	Cleaning kit with 1-quart spray bottle of surface and mat cleaner and 1000 lint-free cloths
SXA-RM-70	Removable Memory - 17 or 17/8 pin
SXA-RM-10	Removable Memory - 8 or 12 pin
SXA-WIN	Replacement Window Kit

10.4 Universal (Input) Safety Modules

UM-FA-xA Safety Modules provide forced-guided, mechanically-linked relay (safety) outputs for the SX system when an external manual reset (latch) is desired or external device monitoring is required in the application. See datasheet p/n 141249 for more information.

Model	Description
UM-FA-9A	3 normally open (N.O.) redundant-output 6 amp contacts
UM-FA-11A	2 normally open (N.O.) redundant-output 6 amp contacts, plus 1 normally closed (N.C.) auxiliary contact

10.5 Safety Controllers

Safety Controllers provide a fully configurable, software-based safety logic solution for monitoring safety and non-safety devices.

For additional models and XS26 expansion modules, see instruction manual p/n 174868.

Table 2. Safety controller models

Non-Expandable Models	Expandable Models	Description
SC26-2	**XS26-2**	26 convertible I/O and 2 redundant solid-state safety outputs
SC26-2d	**XS26-2d**	26 convertible I/O and 2 redundant solid-state safety outputs with display
SC26-2e	**XS26-2e**	26 convertible I/O and 2 redundant solid-state safety outputs with Ethernet
SC26-2de	**XS26-2de**	26 convertible I/O and 2 redundant solid-state safety outputs with display and Ethernet
SC10-2roe		10 inputs, 2 redundant relay safety outputs (3 contacts each) (ISD and Ethernet compatible)
	XS26-ISDd	26 inputs, 2 redundant solid-state safety outputs with display, Ethernet, and 8 ISD channels

10.6 Interface Modules

Interface modules provide forced-guided, mechanically-linked relay (safety) outputs for the SX system with the Manual Reset function configured. The interface module must be monitored by the EDM function performed by the reset line or by a configured EDM input.

Model	Description	Datasheet
IM-T-9A	Interface module, 3 normally open (N.O.) redundant-output 6 amp contacts, removable screw terminals	62822
IM-T-11A	Interface module, 2 normally open (N.O.) redundant-output 6 amp contacts, plus 1 normally closed (N.C.) auxiliary contact, removable screw terminals	

Continued on page 127

© Banner Engineering Corp. All rights reserved.
www.bannerengineering.com

Continued from page 126

Model	Description	Datasheet
SR-IM-9A	Interface module, 3 normally open (N.O.) redundant-output 6 amp contacts, spring clamp terminals	208873
SR-IM-11A	Interface module, 2 normally open (N.O.) redundant-output 6 amp contacts, plus 1 normally closed (N.C.) auxiliary contact, spring clamp terminals	

10.7 Contactors

If used, two contactors per SX system that are monitored by the EDM circuit (performed by the reset line) are required. See Banner datasheet p/n 111881 for more information.

Model	Description
11-BG00-31-D-024	10 amp positive-guided contactor, 3 N.O., 1 N.C.
BF1801L024	18 amp positive-guided contactor, 3 N.O., 1 N.C. (N.C. contact rated at 10 amps)

© Banner Engineering Corp. All rights reserved.
www.bannerengineering.com

Chapter Contents

11.1 Update the Firmware 128
11.2 Handling the Scanner 129
11.3 Cleaning the Window and Scatter Screen 129
11.4 Window Replacement 129
11.5 Fast Replacement in a System with a Memory Device 135
11.6 Replace Your Scanner without a Memory Device 137
11.7 Convert a SX5-B Configuration to a SX5-B6 Configuration 137
11.8 Repairs, Translations, and Replacement Parts 139
11.9 Contact Us 142
11.10 Banner Engineering Corp Limited Warranty 142

Chapter 11 Product Support and Maintenance

11.1 Update the Firmware

Follow these steps to update your scanner's firmware.

1. Download the firmware update from www.bannerengineering.com.
   Make sure the file is saved as a PACKAGE file, not a ZIP file.
2. Launch the Banner SX Scanner software.
3. With the scanner that needs to be updated attached to the computer select **Discovery** from the scanner menu.
4. Select the scanner to be updated from the discovered list.
5. From the **Scanner** menu on the tool bar, choose the firmware update option.
6. Enter the password. The default password is `admin`.
   The firmware update window opens.
7. Click **Select**, then browse to the location in which the update file was saved and select the appropriate update package.
8. Select **Load** from the **Configuration Upload** box. Select **Yes** to the option to have the scanner turn off its outputs.
   The update may take several minutes.
9. After the update is finished, the software prompts you to accept or reject the configuration in the unit (the configuration that was in the unit is restored but this gives you a chance to validate that it is still safe for the application). If it validates, select **Accept**.
   The software takes a minute to finish the process. The scanner is now updated and working, but Banner Engineering recommends that you perform step 10 to validate the existing configuration in the updated Banner SX Scanner software.
10. Validate the existing configuration with the updated firmware.
    a. Click on the **Home** icon.
    b. Select **Modify Safety System Configuration from a Scanner on the Network**.
    c. Select the updated scanner from the discovered list, then click the next page arrow (upper right).
    d. Click on **Programming** (white text in gray bar). Takes a few seconds to open the programming page.
    e. Select **Load** to reload the configuration. Select **OK** in the **The configuration was successfully validated** option.
    f. Enter the password (default password is admin), then click **OK** in the **Scanner Status change in Off-Duty, Continue?** option.
    g. After the configuration loads and the **Accept/Reject** option appears, select **Accept**.
    h. After the accept process is finished, cycle the power to the scanner.

IMPORTANT: As with any configuration change, safety checks are required after a firmware update. Banner Engineering recommends performing a Commissioning Checkout (see "Perform a Commissioning Checkout" on page 111) before returning the scanner to full operation.

© Banner Engineering Corp. All rights reserved.
www.bannerengineering.com

11.2 Handling the Scanner

Observe the permissible environmental conditions for storage and operation. The Scanner’s front screen must be clean, free of damage. and properly installed.

- Avoid touching the front screen.
- Clean dirty screens immediately.

The SX's IP protection is guaranteed only when M12 cables or dust covers are installed on the connectors. Only operate, transport, and store the scanner with its installed cables or dust covers.

11.3 Cleaning the Window and Scatter Screen

Clean the SX’s front and scatter screens regularly, at a frequency depending on the surrounding environmental conditions, and using the recommended materials.

Use only the cleaning kit specified, consisting of approved anti-static cleanser and anti-static cleaning cloths (see "Other Accessories" on page 126). Do not use scouring pads or cloths that can cause scratching (such as paper towels). Never use solvents that can damage the plastic materials. The cleaning procedure depends on the type and degree of contamination.

Both the window and the scatter screen must be cleaned for optimum performance.

Figure 76. Scanner window and scatter screen

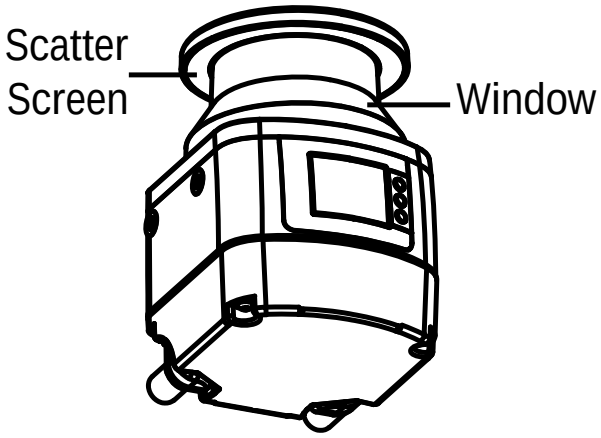

Contamination	Cleaning Method
Particles, loose, scouring	Vacuum without touching or blow away softly, oil-free; or wipe free in one swipe with cleaning cloth
Particles, loose, non-scouring	Vacuum without touching or blow away softly; or wipe free in one swipe with cleaning cloth
Particles, sticking	Wet with cloth soaked in cleanser; or wipe free in one swipe with cleaning cloth
Particles, statically charged	Vacuum without touching; or wipe free in one swipe with cleaning cloth soaked with cleanser
Particles/drops, smearing	Wet with cloth soaked in cleanser and wipe free in one swipe with cleaning cloth
Water drops	Wipe free in one swipe with cleaning cloth
Oil drops	Wet with cloth soaked in cleanser and wipe free in one swipe with cleaning cloth
Fingerprints	Wet with cloth soaked in cleanser and wipe free in one swipe with cleaning cloth

11.4 Window Replacement

For models that allow the window to be replaced (which is all models except the SX5-B), the following information applies.

When a **Clean Window** error is shown on the device display even after cleaning the window, check for any scratches and/or spots. If the window is scratched, spotted, or cannot be cleaned to make the unit work (might be micro scratches to the window reducing its effectiveness), but NOT cracked (which would compromise the IP65 protection of the device), the user may replace the scanner's window assembly.

© Banner Engineering Corp. All rights reserved.
www.bannerengineering.com

Order a replacement window assembly, model **SXA-WIN**. After the replacement is received, carefully follow the instructions in "Replace Your Scanner's Window" on page 131. Because of manufacturing variations in the window, perform a scanner calibration.

CAUTION: By replacing and calibrating the window, the user acknowledges and accepts the following terms.

Window replacement is allowed solely when the optical window is scratched, spotted, or in case of unresolvable **Clean Window** error (no holes or cracks). You are requested to check and comply with this section of the manual, where you can find all conditions, prerequisites, and terms according to which such procedures shall be performed.

The window replacement procedure allowed provided that:

1. The user's qualified personnel fully comply with the proper instructions set forth in this manual. Instructions are technical and specific rules that shall be understood, acknowledged, and applied by the user's qualified personnel.
2. Only qualified personnel, as defined below, will perform this procedure.
3. Window replacement is performed in a clean environment that shall be set up in accordance with 'Prerequisites for Window Replacement' on the following pages to prevent any contamination of the internal optical surfaces.
4. Any dangerous procedure is interrupted, and all safety sensors are disconnected, including any system related to the scanner.
5. The replacement window is not dirty or scratched and has never been used. Avoid any contamination (dirt, fingerprints, scratches, etc.) on or inside the new window during installation.

For the avoidance of doubt, a 'qualified personnel', by possession of a recognized degree or certificate of professional training, or by extensive knowledge, training and experience, has successfully demonstrated the ability to solve problems relating to the installation of the scanner and its integration with the guarded machine. In addition to everything for which the designated person in empowered, the qualified person is empowered to:

- Install the scanner
- Perform all scanner checkout procedures
- Control the password to access the scanner's configuration settings
- Reset the system following a lockout condition
- Perform maintenance and repairs

With regards to window replacement, the qualified person shall be, among other things, responsible for:

- Complying with the instructions set forth in this manual
- Training the qualified operator accordingly
- Carrying out the activities under your accountability in a proper way and in compliance with the instructions provided herein
- Maintaining the safe operation of the product and the environment in which it is installed
- Abiding by all regulations and directives for labor protection and safety at work
- Regularly having the product tested by competent persons, who shall report any anomalies and track the performance of the product in written records.

By replacing the optical window, you declare to acknowledge and accept the potential risk and liabilities arising from the window replacement procedure, as well as from failure to comply with the instructions provided by Banner in this respect. To the fullest extent permitted by law, Banner (and its directors, officers and affiliates) shall not be held liable for any damages (direct, indirect, or consequential) which might occur to you and any third parties as a consequence of the window replacement procedure performed by you or your qualified personnel.

NOTE: To perform the window replacement procedure, the following prerequisites must be strictly observed.

- Clean Environment: Avoid replacing the window in the field. The optical window must be replaced in a controlled, pollution-reduced environment.
- Non-Condensing Environment: The environment where the window replacement is performed must have temperature of 18 - 30 °C and a non-condensing humidity (preferably less than 80%).
- Free Area: A 2-meter (7-foot) free area around the 275° angle range of the scanner is necessary to calibrate and validate the new optical window.
- Visual Inspection: A visual inspection is needed before replacement to establish whether the optical window can be replaced, or the entire scanner needs to be replaced instead.

© Banner Engineering Corp. All rights reserved.
www.bannerengineering.com

- Use of dedicated tools: To perform the window replacement procedure, a 2.5 mm hex key is necessary, preferably with adjustable torque driver.
- Skilled, authorized personnel: The replacement of the optical window must be performed by skilled, authorized personnel only.

11.4.1 Replace Your Scanner's Window

After establishing that the replacement of the optical window is necessary and after making sure that all the prerequisites have been met, start the window replacement procedure.

CAUTION: Always disconnect power to the Safety Laser Scanner before starting the window replacement procedure.

The new optical window replacement package contains the following parts:

- One serialized optical window
- One gasket seal
- Four Tuflok® screws

CAUTION: When handling the new optical window, avoid contaminating it with fingerprints, dirt, scratches, dust, and polluting agents. It is recommended to wear clean, thin gloves to unpack and install the new window.

1. Place the scanner on a flat surface in a controlled, pollution-reduced environment.

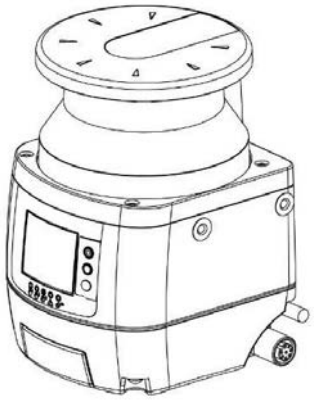

2. Remove the four screws, with the 2.5 mm hex key, securing the existing optical window on the scanner.

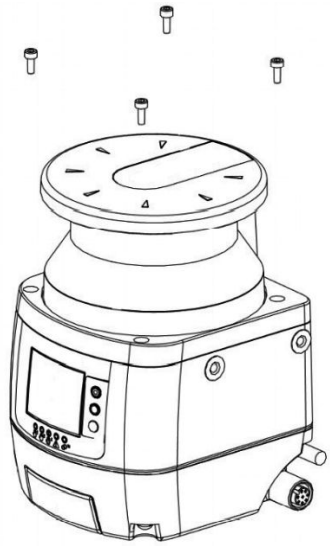

3. Note the gap between the window assembly and the yellow housing. Remove the optical window with a linear, vertical movement. (After the screws have been removed, the window assembly should easily lift off.)

© Banner Engineering Corp. All rights reserved.
www.bannerengineering.com

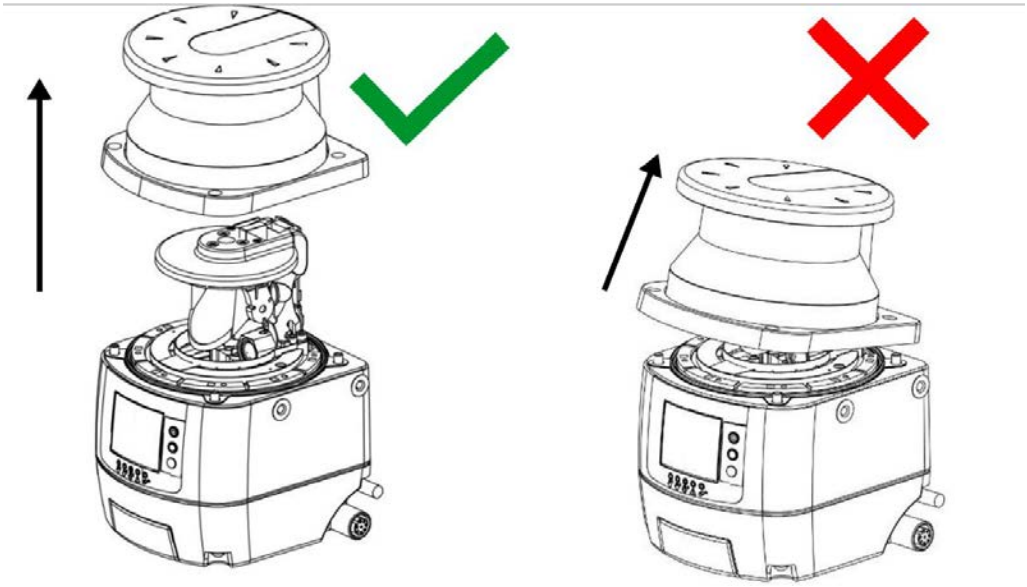

Avoid touching or damaging the internal parts of the device. Wearing a grounded wrist strap is recommended.

4. Remove the seal positioned on the device body. Avoid touching or damaging the internal parts of the scanner. Note the orientation of the seal so that the replacement can be inserted with the same orientation.

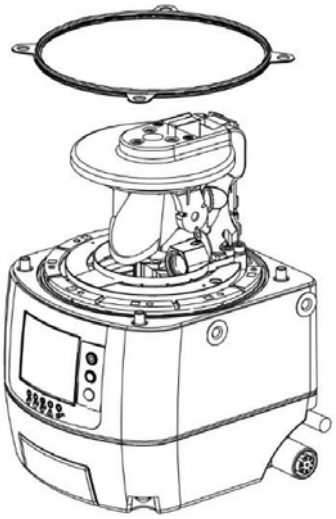

5. Position the new seal, gently pressing it on the device body and making sure it perfectly adheres to it (ridge around screw holes goes down).
6. Before attaching the window, take sufficient measures to prevent dust or any other polluting agent from entering the scanner, as this could affect the detection capability of the scanner. In case of contamination, use dry compressed air to remove it.

© Banner Engineering Corp. All rights reserved.

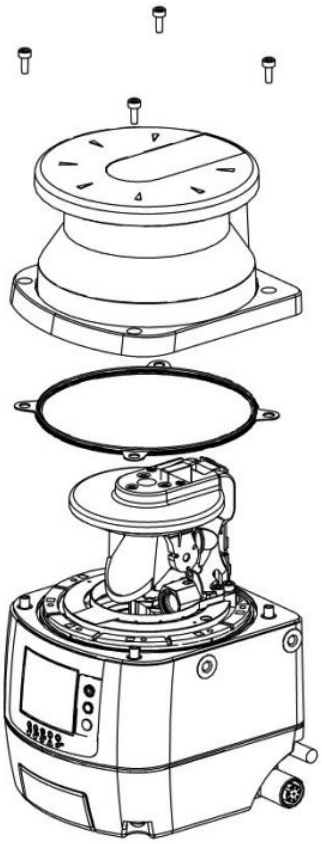

7. Hold the new optical window on the sides and carefully place it in the correct position. Exert pressure on the corners and make sure that the window is perfectly attached to the scanner body without any tilt. Press until the gap between the window assembly and the yellow housing is similar to the original window's gap.
8. Snug the four Tuflok® screws, but do not overtighten them. Use a 2.5 mm × 100 mm ball-end hex screwdriver with a shaft long enough to avoid damaging the optical window.

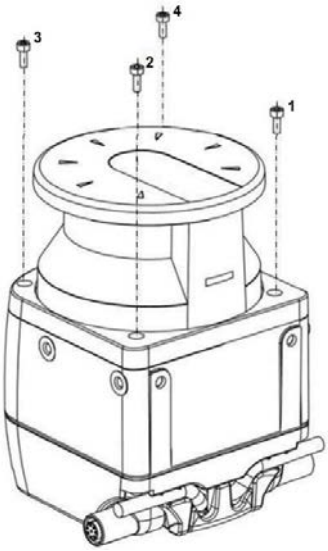

9. Tighten the screws with a torque wrench (tightening torque of 0.5 Nm with the 2.5 mm hex key bit).
10. Remove any contamination (e.g. fingerprints, dust, etc.) on the optical window.
11. Perform a new window calibration procedure to guarantee the proper working of the scanner (see "Calibrate a New Window" on page 134).

© Banner Engineering Corp. All rights reserved.
www.bannerengineering.com

11.4.2 Calibrate a New Window

A two-meter free area around the 275° angle range of the scanner is necessary to calibrate and validate the new optical window. Keep this area free for the entire duration of the procedure.

If the window replacement procedure was performed on a remote scanner, it must be connected to a master scanner. In this case, the last configuration is preserved only if the optical window is replaced while the remote scanner is connected to the same master scanner. If the remote scanner is connected to a different master scanner during window replacement, the last configuration will be lost.

1. After replacing the window, supply power to the scanner and connect it to the configuration software.
2. Go to **Scanner › Discover** to list the scanners on the network.
3. From the list of scanners under **Working**, select the scanner that had its window replaced. Select the appropriate scanner (or cluster) by double clicking on it.
4. Go to **Scanner › Window Replacement** and enter the password (default is admin) and click **OK**.
5. Carefully read the disclaimer. By clicking **OK**, you accept the terms and disclaimers contained herein.
6. Select the device undergoing the window replacement. If there is only one unit, select Master or Device 0. The first remote would be Device 1, second would be Device 2, and the third would be Device 3, etc. Enter the serial number of the new window and select **Next**.
7. If another box comes up that asks you to **Proceed** or **Change**, select **Proceed** to move to the next phase or **Change** to start over.
8. The **Window Replacement** popup window should come up stating 'Window Calibration will start now. A 2m free area around the 275° angle range of the Laser Scanner is necessary. Proceed?' If the scanner is set up in such an area, select **Yes**. If the scanner is not in such an area, the calibration process cannot be performed, so select **No**.

   After **Yes** is selected, the window calibration process begins. The scanner first switches to an offline status (black display), then to offline test mode, displaying the WINDOW REPLACE message. A **Window Replacement** popup window displays in the software to state calibration is in progress.

   If the window is on a REMOTE unit, the master shows the **Configuration not Accepted** icons (white background) because the outputs will be off no matter what. The scanner will go dark at the beginning and end of the process.
9. If the test area is not compliant, an error message displays on the software. Clear the required area and retry the calibration.
10. After the window passes the first portion of the calibration process, validate the calibration procedure. Test the device detection capability with a test configuration.

    The scanner display will show the **Configuration not Accepted** display icons (white background) and the software shows the Window Replacement popup window.
11. The test area for the validation procedure is automatically configured. To test the detection capability of the device(s), use a suitable test piece, e.g. an optically dark, opaque cylinder, with a diameter of 40 mm (like STP-20).
    a. Place the test piece on several points at the edges (distance from the device = 1 meter) over the 275° safety angle. The scanner must detect the test piece at all positions and go to the STOP condition. The number and location of sites where the test is performed must be chosen so that undetected access to the hazardous area is not possible. Do not attempt to insert the test piece into dangerous parts of the machine located in the safety area.
    b. Power off the scanner, wait 10 seconds then re-apply power.
    c. The scanner remains in test mode until the user validates the test. After the test is validated, select **Test Passed** if the system passed the validation test. After validation, the device switches to online mode with the last configuration saved before the window replacement. If the validation test failed, select **Test Failed**, and the device will remain in test mode.
    d. If the window calibration fails, the scanner remains in the offline mode until power-off and the software displays an error message. Repeat the procedure described above. Should the calibration fail again, try a different window or contact the factory.
12. After the window calibration has successfully completed, click **OK**
13. A fault message box displays. If it does not display, click on the red dot in the scanner block. Click **OK**.
14. Re-install the scanner into its original application per the installation sections of the manual. The scanner can operate in normal operation mode now, but the COMMIT ON FIELD warning message displays at each power-on until a trip test is performed per the requirements of the installation.
15. Finish the calibration procedure.
    a. Connect the scanner to the software (**Scanner › Discovery**, then select the scanner).
    b. Select **Window Replacement** again.
    c. Select **Done**.

© Banner Engineering Corp. All rights reserved.

After a few seconds, the trip test can be performed.

16. Perform a trip test (see "Perform a Trip Test" on page 71).

    If the scanner passes the trip test, it is ready for production.

11.5 Fast Replacement in a System with a Memory Device

Fast replacement allows the user to quickly replace a master scanner, remote scanner, or a memory device after they have suffered irreparable damage.

CAUTION: These procedures must be performed by Authorized Personnel only.

These procedures can be performed in the field to restore normal operation and scanner configuration if the replacement parts have the exact same model number as the scanner being replaced.

NOTE: If the replacement scanner has a different model number than the replaced scanner, create a new configuration using the configuration software.

Fast replacement is always possible if the firmware of the scanner (or chain of scanners) are at firmware version 3.2.0 or greater.

All instructions are shown on the scanner display and all tasks can be completed using the keypad except when the instructions refer to the configuration software.

WARNING: At the end of the Fast Replacement process, the user must confirm the successful completion of the replacement procedure by checking that the safety conditions have been restored and by validating the new scanner.

11.5.1 Fast Replacement of a Memory Device

Follow these instructions to replace the Memory Device on an already configured Master unit.

1. Unmount the damaged Memory Device and install the new Memory Device (see "Mounting and Unmounting the Removable Memory" on page 50).
2. The system will first verify that the Memory Device is compatible with the Scanner model (must replace a 8 or 12 pin QD memory device with an 8 or 12 pin QD memory device or a 17 and 8 pin QD memory device with a 17 and 8 pin QD memory device). If the Scanner and Memory Device are not compatible, the Scanner display shows the MEMORY DOESN'T MATCH message.
3. The Memory Device and Master Scanner topologies will not match each other because the Memory Device has no configuration (empty when new). The Master Scanner's display may show the INTF18 error or MEMORY EMPTY message. THIS IS A NORMAL BEHAVIOR and expected.
4. The Memory Device can now be aligned with the Master Scanner topology either with a BACKUP CONFIGURATION copied from the Master Scanner to the Memory Device (follow the procedure shown on the Master Scanner's display and described below) or by loading a configuration using the configuration software (see "Load a Saved Configuration to a Scanner" on page 103). Select the desired procedure using the keypad of the Master Scanner.
5. Follow the procedure shown on the Master Scanner's display:
    a. Press the square middle button next to the display. The screen should show Backup cfg/Cfg from GUI/Exit.
    b. Select **Backup cfg** by clicking the center button when **Backup cfg** is highlighted.
    c. The display asks **Are you sure to run bkp operation? Confirm/Cancel**. To select **Confirm**, make sure it is highlighted then press the center button. The backup will commence. The display shows **BKP IN PROGRESS**.
    d. After a number of seconds the display will switch to the finished screen before returning to full operation (normal display based on the environment).

    If the backup fails, the display will show **BKP FAILED**. Retry the backup and if it still fails try a different Memory Device.

© Banner Engineering Corp. All rights reserved.
www.bannerengineering.com

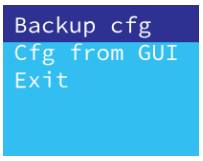

Step 5b.

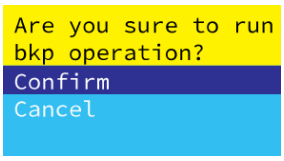

Step 5c.



Step 5c.



11.5.2 Fast Replacement of the Master Scanner

Follow these steps to replace the master scanner with an already configured memory device.

1. Unmount the memory device from the damaged scanner and install it on the new scanner (see "Mounting and Unmounting the Removable Memory" on page 50).
2. Verify that the new memory device is the same model number as the replaced device (must replace a 8- or 12-pin QD memory device with an 8- or 12-pin QD memory device or a 17- and 8-pin QD memory device with a 17- and 8-pin QD memory device).
3. If the new scanner (just purchased not re-purposed) and memory device are not compatible, the scanner display shows the WAITING CONFIG message. If a re-purposed scanner is used and has not been reset to factory default settings, the scanner display shows the MEMORY DOESN'T MATCH message.

   In a configuration with master and remote scanners, only replace the damaged master scanner. Do not change any remote scanners or the topology of the configuration will be changed. If anything other than the damaged master scanner is changed, the master device display shows the DEVICD EMPTY or WAITING CONFIG message and a new configuration must be loaded using the configuration software.
4. The cluster size and models now match and only the serial numbers do not match the original configuration. The master scanner display shows the CFG NO MATCHING message. The master scanner can now be aligned with the memory device topology by **restoring the configuration** from the memory device to the scanner (see next step) or by loading a configuration using the configuration software (see "Load a Saved Configuration to a Scanner" on page 103).
5. To restore the configuration from the memory device, follow these steps:
   a. Press the square middle button next to the display. The screen should show **Restore cfg/Cfg from GUI/Exit**.
   b. Select **Restore cfg** by clicking the center button when **Restore cfg** is highlighted. The display shows: **Are you sure to run restore operation? Confirm/Cancel**.
   c. To select **Confirm**, make sure it is highlighted then press the center button. The restore process will commence. The display shows **RES IN PROCESS**.
   d. After several seconds, the display switches to the Run Test Mode screen. Press the center button to enter test mode (and validate the scanner fields) (the display goes dark for a few seconds before returning with the Configuration not accepted view) or press the down arrow to exit.
   e. After validating the safety zones with the new scanner, press the down arrow to accept or reject the validation. Highlight the desired entry and press the center button. If accepted, after pressing the accept validation, the **RES VALIDATION** screen will show for a few seconds before the scanner enters run mode. If reject is selected, the software must be used to create/load a new configuration.



Step 5a.

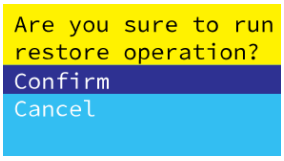

Step 5b.



Step 5c.



Step 5e.

11.5.3 Fast Replacement of a Remote Scanner

The Fast Replacement of a remote scanner can occur only when a damaged remote device is replaced with a new remote device of the same model and only the serial numbers do not match.

In this case, the new scanner can be aligned with the memory device topology by restoring the configuration from the memory device to the scanner. To restore the configuration from the memory device, the process is as follows.

1. Remove the damaged remote scanner and replace it with the identical model new scanner.
2. Select the **Restore** option.

© Banner Engineering Corp. All rights reserved.
www.bannerengineering.com



The remote scanner's display shows the CHECK MASTER message. The master scanner's display shows the RUN TEST MODE message.

3. Press the center button on the master to enter the test mode.
4. Perform a Safety Zone validation test on the various safety zones on the replaced Remote Scanner.
5. After completing the validation test, press the down arrow on the master and select accept or reject the validation.
   - If accepted, the scanners return to an active state after a few seconds.
   - If rejected, a new configuration will have to be created/loaded from the configuration software.

11.6 Replace Your Scanner without a Memory Device

If it is necessary to replace your **SX5-B** or **SX5-B6**, replace the **SX5-B(6)** with the same model and install it in the same position and alignment as the original **SX5-B(6)**.

1. Remove all power from the **SX5-B(6)** and the guarded machine.
2. Remove the original **SX5-B(6)**.
3. Mount the replacement **SX5-B(6)** using the existing mounting bracket or holes.
4. Verify the alignment of the new **SX5-B(6)** (e.g., tilt and rotation) matches that of the original **SX5-B(6)**.
5. Connect the 8-pin M12 cable to the machine interface cable.
6. Connect a 4-pin M12 Ethernet cable to the Ethernet port and transfer the appropriate configuration from a saved file or create a new configuration.
7. Apply power to only the **SX5-B(6)** (not the machine) and perform the Commissioning Checkout procedure.

   A model **SX5-B** can be replaced by a model **SX5-B6**.

11.7 Convert a SX5-B Configuration to a SX5-B6 Configuration

NOTE: This conversion process can only convert an existing configuration operating on or saved from a **SX5-B** scanner with firmware version 2.1.4. The new file can operate in any **SX5-B6** with firmware version 3.1.3 or higher. If the existing **SX5-B** has a version 2.0.1, the firmware and configuration must be updated to version 2.1.4 (see "Update the Firmware" on page 128).

When opening a configuration created in version 2.1.4 of the Banner SX Scanner software, the following warning displays:

Figure 77. Warning



1. To use the configuration in a **SX5-B** scanner, select **No**.

   When **No** is selected, no changes are made to the configuration. The Banner SX Scanner software shows that a **SX5-B** configuration is loaded:

© Banner Engineering Corp. All rights reserved.
www.bannerengineering.com

Figure 78. SX5-B Configuration Loaded

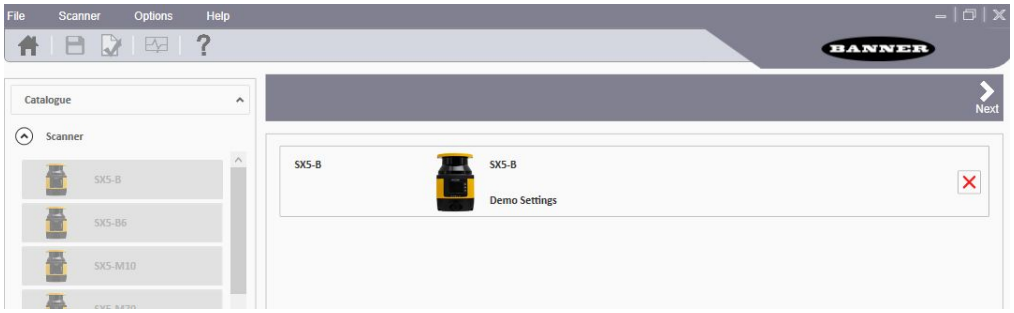

2. To use the configuration in a **SX5-B6** scanner, select **Yes**.

   When **Yes** is selected, a file browser window displays with a suggested filename (*.xml):

   Figure 79. Suggested File Name

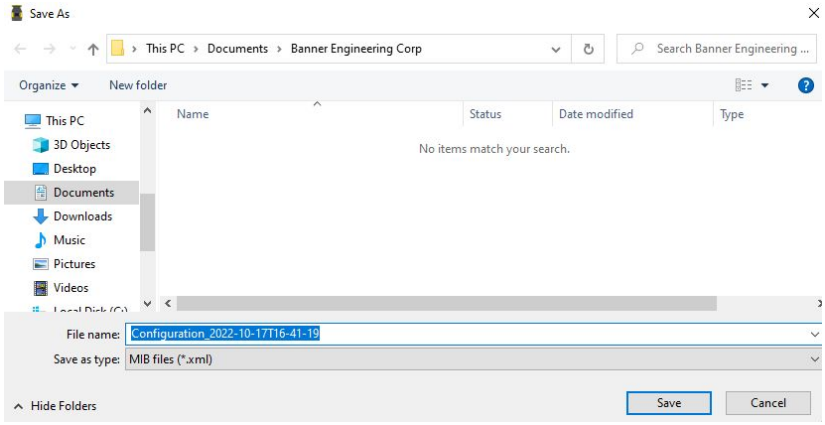

3. Keep the suggested filename and location or insert a custom name and/or location.
4. Select **Save**.

   The configuration file is converted to the format needed for the **SX5-B6** scanner. The file is also opened in the Banner SX Scanner software:

   Figure 80. SX5-B6 File Open in the Software

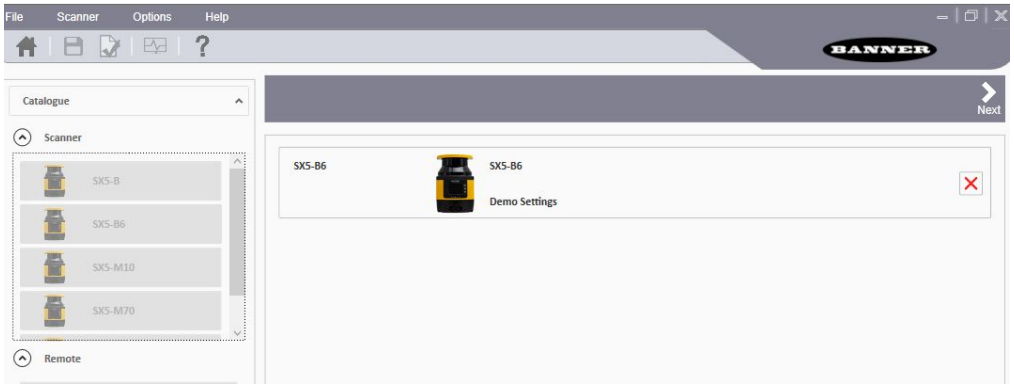

   The file is ready to load into a **SX5-B6** scanner directly or it can be edited before loading into a **SX5-B6** scanner.

> **IMPORTANT:** The new file can no longer be loaded into a **SX5-B** scanner.

> **NOTE:** If **Cancel** is selected, there is no change to the current configuration.

© Banner Engineering Corp. All rights reserved.
www.bannerengineering.com

11.8 Repairs, Translations, and Replacement Parts

English

Do not attempt any repairs to this Banner device, other than replacing the component(s) listed in this document with original Banner replacement components.

See "Other Accessories" on page 126 for a list of replaceable components.

Other than these components, this Banner device contains no field-replaceable components. For other problems, contact Banner Engineering for troubleshooting of this device. If the device is determined to be defective by a Banner Applications Engineer, they will advise you of Banner's RMA (Return Merchandise Authorization) procedure.

```
IMPORTANT: If instructed to return the device, pack it with care. Damage that occurs in return
shipping is not covered by warranty.
```

Obtain assistance with product repairs by contacting your local Banner Engineering Corp distributor or by calling Banner directly at (763) 544-3164. Access literature translated into your native language on the Banner website at www.bannerengineering.com or contact Banner directly at (763) 544-3164.

Deutsch

Versuchen Sie nicht, dieses Banner-Gerät zu reparieren, es sei denn, Sie ersetzen die in diesem Dokument aufgeführten Komponenten durch Originalersatzkomponenten von Banner.

Siehe "Other Accessories" on page 126 mit einer Liste der Ersatzkomponenten.

Abgesehen von diesen Komponenten enthält dieses Banner-Gerät keine vor Ort austauschbaren Komponenten. Wenden Sie sich bei anderen Störungen zur Fehlerbehebung dieses Geräts an Banner Engineering. Wenn ein Banner-Anwendungstechniker zu dem Schluss kommt, dass dieses Gerät defekt ist, erhalten Sie von dem Techniker Erläuterungen zum RMA-Verfahren (Return Merchandise Authorization) von Banner für die Warenrückgabe.

```
WICHTIG: Wenn Sie der Techniker anweist, das Gerät zurückzusenden, verpacken Sie es bitte
sorgfältig. Transportschäden bei der Rücksendung werden von der Garantie nicht abgedeckt.
```

Unterstützung bei Produktreparaturen erhalten Sie von Ihrem örtlichen Banner Engineering Corp Händler oder direkt von Banner unter Tel. (763) 544-3164. Die in Ihre Muttersprache übersetzte Literatur finden Sie auf der Banner-Website unter www.bannerengineering.com oder kontaktieren Sie Banner direkt unter Tel. (763) 544-3164.

Français

Aucune réparation ne doit être effectuée sur ce dispositif, à l’exception du remplacement du/des composant(s) répertorié(s) dans ce document par des pièces de rechange Banner d’origine.

Voir "Other Accessories" on page 126 pour obtenir la liste des composants remplaçables.

À l’exception de ces composants, ce dispositif Banner ne contient aucune pièce qui puisse être remplacée sur place. Si vous rencontrez un autre problème, contactez Banner Engineering pour le dépannage du dispositif. Si un ingénieur d’applications Banner détermine que le dispositif est défectueux, il vous indiquera la procédure à suivre pour le retour des produits (RMA).

```
Important : Si vous devez retourner le dispositif, emballez-le avec soin. Les dégâts
occasionnés pendant le transport de retour ne sont pas couverts par la garantie.
```

Pour vous aider lors de la réparation de produits, contactez votre distributeur Banner local our appelez directement Banner au (763) 544-3164. La documentation traduite dans votre langue est disponible sur le site internet de Banner www.bannerengineering.com ou contactez directement Banner au (763) 544-3164.

© Banner Engineering Corp. All rights reserved.
www.bannerengineering.com

Italiano

Non tentare di riparare questo dispositivo Banner autonomamente, se non sostituendo i componenti indicati nel presente documento con componenti di ricambio originali Banner.

Per un elenco dei componenti che è possibile sostituire, vedere "Other Accessories" on page 126.

Ad eccezione di tali componenti, questo dispositivo Banner non contiene altri componenti sostituibili sul campo. Nel caso in cui si riscontrino problemi di altro tipo, si prega di contattare Banner Engineering per richiedere assistenza. Se il dispositivo viene riscontrato difettoso da un tecnico Banner, il nostro personale vi comunicherà la procedura da seguire per ottenere l'autorizzazione al reso (RMA).

Importante: Se si ricevono istruzioni di rispedire il dispositivo al produttore, imballarlo con cura. I danni dovuti al trasporto non sono coperti dalla garanzia.

Per assistenza nelle riparazioni dei prodotti, contattare il distributore locale Banner Engineering Corp o contattare direttamente Banner al numero (763) 544-3164. È possibile accedere alla documentazione tradotta nella propria lingua madre sul sito Web Banner all'indirizzo www.bannerengineering.com o contattare direttamente Banner al numero (763) 544-3164.

Español

No intente realizar ninguna reparación en este dispositivo Banner, salvo reemplazar los componentes mencionados en este documento por componentes de repuesto originales de Banner.

Consulte "Other Accessories" on page 126 para obtener una lista de componentes que se pueden reemplazar.

Aparte de estos componentes, este dispositivo Banner no contiene componentes reemplazables en campo. Para otras situaciones, comuníquese con Banner Engineering para solucionar los problemas de este dispositivo. Si algún ingeniero de Aplicaciones de Banner determina que el dispositivo está defectuoso se le informará el procedimiento RMA (Autorización de Devolución de Mercancía) de Banner.

Importante: Si se le solicita devolver el dispositivo, empáquelo con cuidado. Puede haber daños durante el envío de devolución que no estén cubiertos por la garantía.

Para reparaciones de productos, por favor contacte a su distribuidor local de Banner Engineering o llame a Banner directamente al 00 1 (763) 544-3164. Vea la literatura traducida en su idioma en el sitio web Banner en www.bannerengineering.com o comuníquese con Banner directamente al 00 1 (763) 544-3164.

中国人

除使用邦纳原厂备件替换本文中列出的组件外，请勿对该邦纳装置进行任何维修操作。

有关可更换组件的列表，请参见 "Other Accessories" on page 126。

除这些组件外，该邦纳装置不包含任何可现场更换的组件。对于其他问题，请联系邦纳以获取该装置的故障排查信息。如果装置经邦纳应用工程师认定为有缺陷，他们会告知您邦纳的 RMA（退货授权）程序。

重要注意事项： 如被要求退回装置，请妥善包装后寄回。退货运输过程中发生的损坏不在保修范围内。

请联系当地的 Banner Engineering Corp 经销商或直接致电 Banner +1 (763) 544-3164，以获得产品维修帮助。请访问邦纳网站 www.bannerengineering.com 或直接拨打 +1 (763) 544-3164 联系邦纳，获取翻译成您母语的资料。

한국인

이 문서에 나열된 구성부품을 정품 Banner 교체용 구성부품으로 교체하는 것 외에는 이 Banner 장치를 수리하려고 시도하지 마십시오.

교체 가능한 구성부품 목록은 "Other Accessories" on page 126를 참조하십시오.

이 Banner 장치에는 해당 구성부품 이외에 현장에서 교체할 수 있는 구성부품이 없습니다. 다른 문제는 Banner Engineering에 연락하여 해당 장치의 문제 해결을 문의하십시오. Banner 애플리케이션 엔지니어가 장치에 결함이 있는 것으로 판정하면, Banner의 RMA(제품 반품 승인)절차에 대해 안내해 드립니다.

중요: 제품을 반송하도록 안내 받으셨다면 잘 포장해주십시오. 반송 도중에 발생한 손상은 보증 서비스가 적용되지 않습니다.

제품 수리에 대한 지원은 지역 Banner Engineering Corp 대리점에 문의하거나 Banner에 직접 (763) 544-3164로 문의하실 수 있습니다. 사용자의 모국어로 번역된 자료는 Banner 웹사이트 www.bannerengineering.com에서 액세스하거나 Banner에 직접 (763) 544-3164로 문의하실 수 있습니다.

© Banner Engineering Corp. All rights reserved.
www.bannerengineering.com

日本語

このバナー装置の修理は、本書に記載されているコンポーネントをバナー純正の交換用コンポーネントに交換する以外、行わないでください。

交換可能な部品のリストについては、"Other Accessories" on page 126をご覧ください。

このバナー装置に対応する現場で交換可能な部品は、これらの部品以外にありません。その他の問題については、本装置のトラブルシューティングについてバナーエンジニアリングにお問い合わせください。バナーのアプリケーションエンジニアが装置に欠陥があると判断した場合、バナーのRMA（返品承認）手続きについてお知らせします。

重要 ： 返品を指示された場合は、装置を丁寧に梱包してください。返品時に発生した破損は保証の対象外となります。

製品の修理については、最寄りのBanner Engineering Corp代理店にお問い合わせいただくか、米国+1 (763) 544-3164まで直接お電話でお問い合わせください。バナーのウェブサイト（www.bannerengineering.com）でお客様の言語に翻訳された資料にアクセスするか、米国+1 (763) 544-3164まで直接お電話でお問い合わせください。

čeština

Nepokoušejte se provádět žádné opravy tohoto zařízení Banner, kromě výměny součástí uvedených v tomto dokumentu za originální náhradní součásti Banner.

Seznam vyměnitelných součástí naleznete v části "Other Accessories" on page 126.

Kromě těchto součástí neobsahuje toto zařízení Banner žádné součásti vyměnitelné v provozních podmínkách. V případě potřeby řešení problémů se zařízením kontaktujte společnost Banner Engineering. Pokud je zařízení vyhodnoceno technikem společnosti Banner jako poškozené, bude vám doporučen postup reklamace RMA společnosti Banner.

Důležité: Pokud byl vydán požadavek na vrácení zařízení, pečlivě ho zabalte. Poškození vzniklé při dopravě není považováno za záruční opravu.

Pokud produkt potřebuje opravu, vyžádejte si pomoc od místního distributora společnosti Banner Engineering Corp nebo přímo na telefonním čísle (763) 544-3164. Dokumentaci přeloženou do vašeho jazyka si vyhledejte na webových stránkách společnosti Banner na adrese www.bannerengineering.com nebo se obraťte přímo na společnost Banner na telefonním čísle (763) 544-3164.

Polski

Nie należy podejmować żadnych prób naprawy urządzenia Banner poza wymianą elementów wymienionych w niniejszym dokumencie na oryginalne elementy zamienne Banner.

Zobacz "Other Accessories" on page 126, aby zapoznać się z listą wymiennych elementów.

Poza tymi elementami urządzenie Banner nie zawiera żadnych elementów, które można wymieniać samodzielnie. W celu rozwiązania problemów z urządzeniem należy skontaktować się z działem technicznym firmy Banner Engineering. Jeśli urządzenie zostanie uznane za wadliwe przez inżyniera technicznego Banner, poinformuje on użytkownika o firmowej procedurze zwrotu towaru (RMA) w firmie Banner.

Ważne: Jeśli urządzenie ma zostać zwrócone, należy je starannie zapakować. Uszkodzenia powstałe podczas odsyłki nie są objęte gwarancją.

Aby uzyskać pomoc w zakresie naprawy produktu, należy skontaktować się z lokalnym dystrybutorem Banner Engineering Corp lub zadzwonić bezpośrednio do firmy Banner pod numer (763) 544-3164. Dostęp do literatury przetłumaczonej na swój język ojczysty można uzyskać na stronie internetowej firmy Banner pod adresem www.bannerengineering.com lub kontaktując się bezpośrednio z firmą Banner pod numerem (763) 544-3164.

© Banner Engineering Corp. All rights reserved.
www.bannerengineering.com

Português

Não tente fazer nenhum reparo neste dispositivo Banner, a não ser substituir o(s) componente(s) listado(s) neste documento por componentes de reposição originais da Banner.

Consulte "Other Accessories" on page 126 para obter uma lista de componentes substituíveis.

Além desses componentes, este dispositivo Banner não contém componentes substituíveis em campo. Para outros problemas, entre em contato com a Banner Engineering para solucionar o problema deste dispositivo. Se um engenheiro de aplicações da Banner determinar que o dispositivo está com defeito, ele o informará sobre o procedimento de RMA (Return Merchandise Authorization) da Banner.

Importante: Se for instruído a devolver o dispositivo, embale-o com cuidado. Os danos ocorridos no transporte de devolução não são cobertos pela garantia.

Obtenha assistência para reparos do produto entrando em contato com o distribuidor local da Banner Engineering Corp ou ligando diretamente para a Banner no telefone (763) 544-3164. Acesse a literatura traduzida para seu idioma nativo no site da Banner em www.bannerengineering.com ou entre em contato diretamente com a Banner pelo telefone (763) 544-3164.

Türkçe

Bu belgede listelenen bileşen(ler)in orijinal Banner yedek bileşenleri ile değiştirilmesi dışında bu Banner cihazında onarım yapmaya çalışmayın.

Değiştirilebilir bileşenlerin listesi için "Other Accessories" on page 126 bölümüne bakın.

Bu Banner cihazı listelenen bileşenler dışında sahada değiştirilebilecek hiçbir bileşen içermez. Diğer sorunlarda cihazda sorun giderme işlemleri için Banner Engineering ile iletişime geçin. Bir Banner Uygulama Mühendisi tarafından cihazın kusurlu olduğu tespit edilirse, Banner RMA (İade Mal Yetkilendirme) prosedürü hakkında bilgilendirilirsiniz.

ÖNEMLİ: İade etmeniz istenirse, cihazı dikkatli bir şekilde paketleyin. İade nakliyesinde meydana gelecek hasarlar garanti kapsamında değildir.

Yerel Banner Engineering Corp distribütörünüzle iletişime geçerek veya doğrudan (763) 544-3164 numaralı telefondan Banner'ı arayarak ürün onarımlarıyla ilgili yardım alın. Ana dilinize çevrilmiş dokümanlara www.bannerengineering.com adresindeki Banner web sitesinden erişebilir veya (763) 544-3164 numaralı telefondan doğrudan Banner ile iletişime geçebilirsiniz.

11.9 Contact Us

Banner Engineering Corp. | 9714 Tenth Avenue North | Plymouth, MN 55441, USA | Phone: + 1 888 373 6767

For worldwide locations and local representatives, visit www.bannerengineering.com.

11.10 Banner Engineering Corp Limited Warranty

Banner Engineering Corp. warrants its products to be free from defects in material and workmanship for one year following the date of shipment. Banner Engineering Corp. will repair or replace, free of charge, any product of its manufacture which, at the time it is returned to the factory, is found to have been defective during the warranty period. This warranty does not cover damage or liability for misuse, abuse, or the improper application or installation of the Banner product.

THIS LIMITED WARRANTY IS EXCLUSIVE AND IN LIEU OF ALL OTHER WARRANTIES WHETHER EXPRESS OR IMPLIED (INCLUDING, WITHOUT LIMITATION, ANY WARRANTY OF MERCHANTABILITY OR FITNESS FOR A PARTICULAR PURPOSE), AND WHETHER ARISING UNDER COURSE OF PERFORMANCE, COURSE OF DEALING OR TRADE USAGE.

This Warranty is exclusive and limited to repair or, at the discretion of Banner Engineering Corp., replacement. **IN NO EVENT SHALL BANNER ENGINEERING CORP. BE LIABLE TO BUYER OR ANY OTHER PERSON OR ENTITY FOR ANY EXTRA COSTS, EXPENSES, LOSSES, LOSS OF PROFITS, OR ANY INCIDENTAL, CONSEQUENTIAL OR SPECIAL DAMAGES RESULTING FROM ANY PRODUCT DEFECT OR FROM THE USE OR INABILITY TO USE THE PRODUCT, WHETHER ARISING IN CONTRACT OR WARRANTY, STATUTE, TORT, STRICT LIABILITY, NEGLIGENCE, OR OTHERWISE.**

Banner Engineering Corp. reserves the right to change, modify or improve the design of the product without assuming any obligations or liabilities relating to any product previously manufactured by Banner Engineering Corp. Any misuse, abuse, or improper application or installation of this product or use of the product for personal protection applications when the product is identified as not intended for such purposes will void the product warranty. Any modifications to this product without prior express approval by Banner Engineering Corp will void the product warranties. All specifications published in this document are subject to change; Banner reserves the right to modify product specifications or update documentation at any time. Specifications and product information in English supersede that which is provided in any other language. For the most recent version of any documentation, refer to: www.bannerengineering.com.

For patent information, see www.bannerengineering.com/patents.

© Banner Engineering Corp. All rights reserved.
www.bannerengineering.com

Chapter Contents

12.1 Applicable U.S. Standards 143
12.2 Applicable European and International Standards 143

Chapter 12 Standards and Regulations

The list of standards below is included as a convenience for users of this Banner device. Inclusion of the standards below does not imply that the device complies specifically with any standard, other than those specified in the Specifications/Design Standards section of this manual. See the American National Standards Institute (ANSI) at https://webstore.ansi.org/ or another source for applicable documents.

12.1 Applicable U.S. Standards

Not inclusive

ANSI B11 Standards for Machine Tools Safety

ANSI/RIA R15.06 Safety Requirements for Industrial Robots and Robot Systems

NFPA 79 Electrical Standard for Industrial Machinery

ANSI/PMMI B155.1 Package Machinery and Packaging-Related Converting Machinery — Safety Requirements

ANSI/ASSP Z244.1-2024 The Control of Hazardous Energy – Lockout, Tagout, and Alternative Methods

OSHA 29 CFR 1910 Occupational Safety and Health Standards

12.2 Applicable European and International Standards

Not Inclusive

ISO 12100 Safety of Machinery – General Principles for Design – Risk Assessment and Risk Reduction

EN 60204-1 Electrical Equipment of Machines Part 1: General Requirements

ISO 13849-1 Safety of Machinery – Safety-Related Parts of Control Systems – Part 1: General Principles for Design

IEC 61508 Functional Safety of Electrical/Electronic/Programmable Electronic Safety-Related Systems

IEC 62061 Safety of Machinery – Functional Safety of Safety-Related Control Systems

EN 13855 The Positioning of Protective Equipment in Respect to Approach Speeds of Parts of the Human Body

Acquire a type C standard for your specific machinery.

© Banner Engineering Corp. All rights reserved.

Chapter Contents

Chapter 13 Additional Information (for SX5-B models)

Figure 81. Additional distance (Z_{amb}) for 70 mm resolution

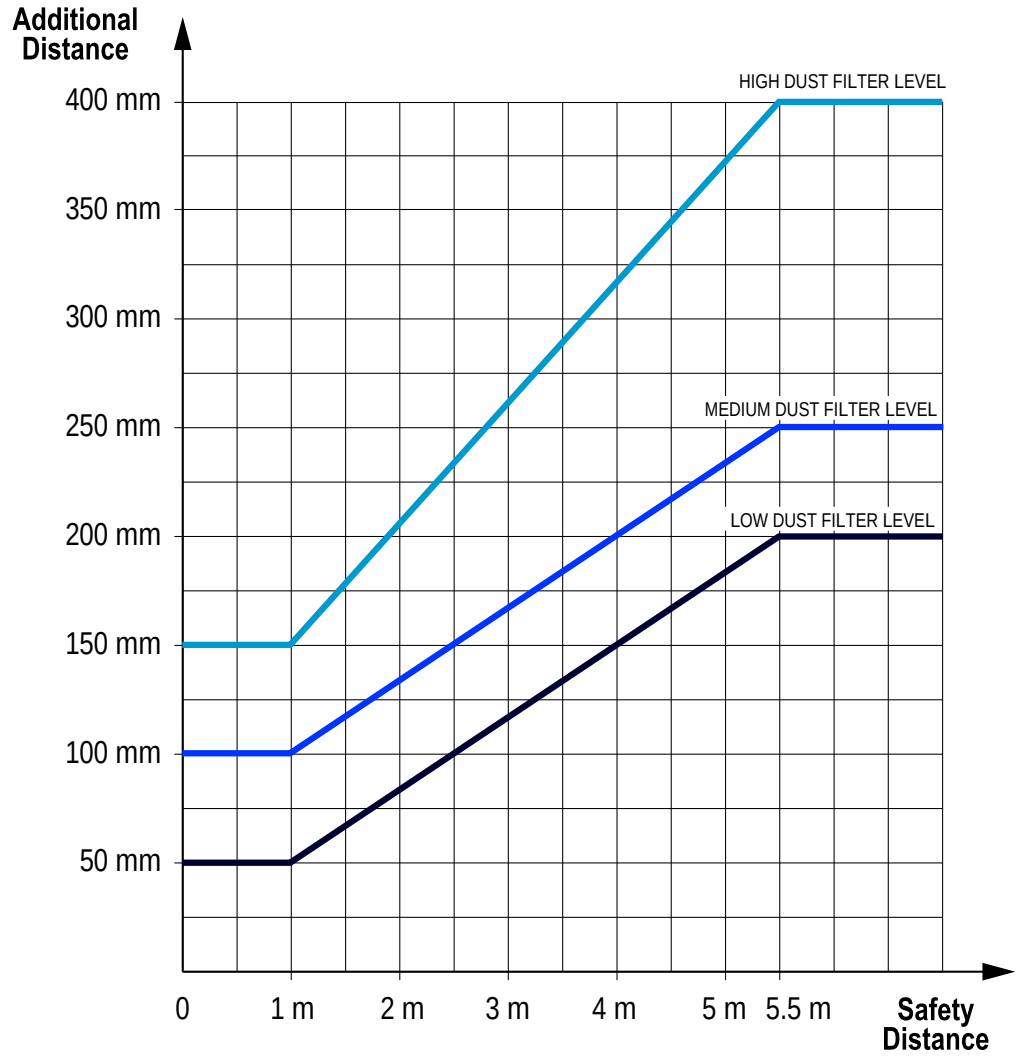

© Banner Engineering Corp. All rights reserved.
www.bannerengineering.com

Figure 82. Additional distance (Z_{amb}) for 40 mm resolution

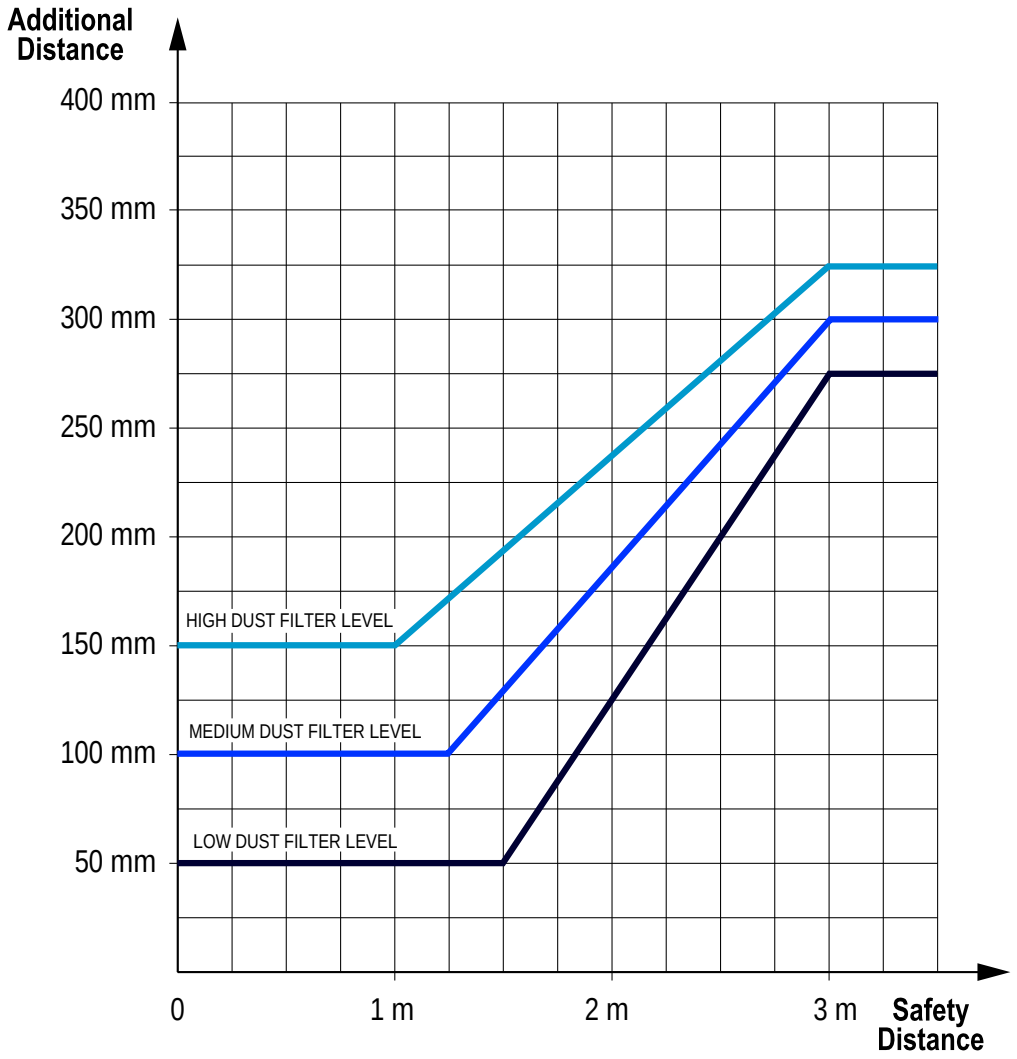

© Banner Engineering Corp. All rights reserved.
www.bannerengineering.com

Index

A

accessories
  safety controller 126

H

hazards
  reducing 41

M

mute sensor 76
mute switch 76

S

safety controller 126

© Banner Engineering Corp. All rights reserved.
www.bannerengineering.com

Glossary

ANSI

The American National Standards Institute (ANSI) is an association of industry representatives that develops technical standards (including safety standards). These standards comprise a consensus from a variety of industries on good practice and design. ANSI standards relevant to the application of safety products include the ANSI B11 Series, and ANSI/RIA R15.06.

auto start/restart (trip) condition

An auto start/restart condition is when the safety outputs of a safety light curtain system turn off after an object completely blocks a beam and re-energize when the object is removed from the defined area.

defined area

The defined area is the "screen of light" generated by a safety light curtain system that is defined by the height and the safety distance (minimum distance) of the system.

Designated Person

A Designated Person is a person or persons identified and designated in writing, by the employer, as being appropriately trained and qualified to perform a specified checkout procedure.

guarded machine

A guarded machine is the machine whose point of operation is guarded by the safety system.

hazardous area

The hazardous area is an area that poses an immediate or impending physical hazard.

lockout condition

A lockout condition is a safety light curtain condition that is automatically attained in response to certain failure signals. When a lockout condition occurs, the safety light curtain’s safety outputs turn off; the failure must be corrected and a manual reset is required to return the system to run mode.

machine primary control element

A machine primary control element (MPCE) is an electrically powered element, external to the safety system, that directly controls the machine’s normal operating motion in such a way that the element is last (in time) to operate when the machine motion is either initiated or arrested.

manual start/restart (latch)

Manual start/restart (latch) is when the safety outputs of a safety light curtain system turn off when an object completely blocks a beam. In a manual start/restart condition, the safety outputs stay off when the object is removed from the defined area. To re-energize the outputs, perform a proper manual reset.

pass-through hazard

A pass-through hazard is associated with applications where personnel may pass through a safeguard (which issues a stop command to remove the hazard), and then continues into the guarded area, such as in perimeter guarding. Subsequently, their presence is no longer detected, and the related danger becomes the unexpected start or restart of the machine while personnel are within the guarded area.

Qualified Person

A Qualified Person is a person who, by possession of a recognized degree or certificate of professional training, or who, by extensive knowledge, training and experience, has successfully demonstrated the ability to solve problems relating to the subject matter and work.

© Banner Engineering Corp. All rights reserved.
www.bannerengineering.com

reset

A reset refers to the use of a manually operated switch to restore the safety outputs to the ON state from a lockout or a manual start/restart (latch) condition.

supplemental guarding

Supplemental guarding is additional safeguarding device(s) or hard guarding, used to prevent a person from reaching over, under, through or around the primary safeguard or otherwise accessing the guarded hazard.

© Banner Engineering Corp. All rights reserved.
www.bannerengineering.com

LinkedIn

X

Facebook

Instagram



© 2026. All rights reserved.
www.bannerengineering.com