MINI-ARRAY Two-Piece Measuring Light Screen (3/4 in) Quick Start Guide

Features

A-GAGE MINI-ARRAY Two-Piece Measuring Light Screen configured for vehicle separation with two discrete outputs with EIA-485 communication

This guide is designed to help you set up and install the MINI-ARRAY Two-Piece Measuring Light Curtain. For complete information on programming, performance, troubleshooting, dimensions, and accessories, please refer to the Product Manual at www.bannerengineering.com. Search for part number 117167 to view the Product Manual. Use of this document assumes familiarity with pertinent industry standards and practices.

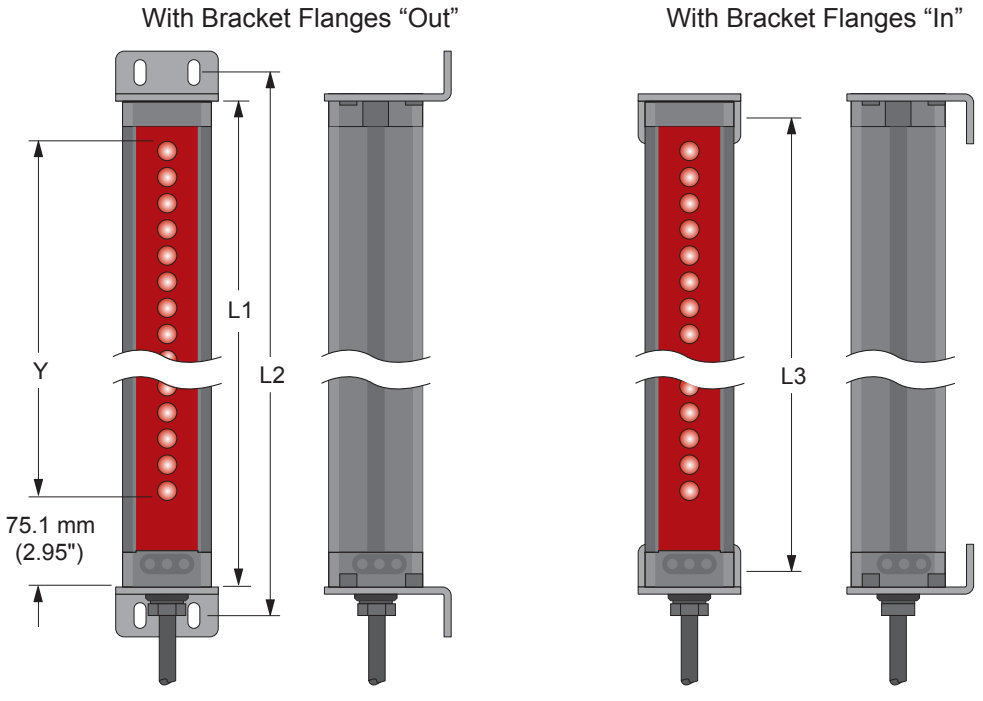

WARNING:

- **Do not use this device for personnel protection**
- Using this device for personnel protection could result in serious injury or death.
- This device does not include the self-checking redundant circuitry necessary to allow its use in personnel safety applications. A device failure or malfunction can cause either an energized (on) or de-energized (off) output condition.

Models

Emitter/Receiver Models	Array Length (Y)	Housing Length (L1)	Distance Between Bracket Holes		Total Beams	Sensor Scan Time [1]	
			L2	L3		Interlaced Scan [2]	Straight Scan
MAE616Q Emitter MAR616NX485Q Receiver	143 mm (5.6 in)	231 mm (9.1 in)	262 mm (10.3 in)	205 mm (8.1 in)	8	1.4 ms	0.9 ms
MAE1216Q Emitter MAR1216NX485Q Receiver	295 mm (11.62 in)	384 mm (15.1 in)	414 mm (16.3 in)	357 mm (14.1 in)	16	2.5 ms	1.5 ms
MAE1816Q Emitter MAR1816NX485Q Receiver	448 mm (17.62 in)	536 mm (21.1 in)	567 mm (22.3 in)	510 mm (20.1 in)	24	3.6 ms	2.0 ms
MAE2416Q Emitter MAR2416NX485Q Receiver	600 mm (23.62 in)	689 mm (27.1 in)	719 mm (28.3 in)	662 mm (26.1 in)	32	4.8 ms	2.6 ms

Continued on page 2

[1] Worst-case response time is twice the scan time.
[2] Scan time for Vehicle Separation scanning configuration.

Original Instructions
27-Apr-26

© Banner Engineering Corp. All rights reserved.
www.bannerengineering.com

119169
p/n: 119169 Rev G

ПРОМЭЛЕКТРОНИКА/ sales@prom-elec.com

Continued from page 1

Emitter/Receiver Models	Array Length (Y)	Housing Length (L1)	Distance Between Bracket Holes		Total Beams	Sensor Scan Time	
			L2	L3		Interlaced Scan	Straight Scan
MAE3016Q Emitter MAR3016NX485Q Receiver	752 mm (29.62 in)	841 mm (33.1 in)	871 mm (34.3 in)	815 mm (32.1 in)	40	5.9 ms	3.2 ms
MAE3616Q Emitter MAR3616NX485Q Receiver	905 mm (35.62 in)	993 mm (39.1 in)	1024 mm (40.3 in)	967 mm (38.1 in)	48	7.0 ms	3.7 ms
MAE4216Q Emitter MAR4216NX485Q Receiver	1057 mm (41.62 in)	1146 mm (45.1 in)	1176 mm (46.3 in)	1119 mm (44.1 in)	56	8.1 ms	4.3 ms
MAE4816Q Emitter MAR4816NX485Q Receiver	1210 mm (47.62 in)	1298 mm (51.1 in)	1329 mm (52.3 in)	1272 mm (50.1 in)	64	9.2 ms	4.8 ms
MAE6016Q Emitter MAR6016NX485Q Receiver	1514 mm (59.62 in)	1603 mm (63.1 in)	1633 mm (64.3 in)	1577 mm (62.1 in)	80	11.5 ms	6.0 ms
MAE7216Q Emitter MAR7216NX485Q Receiver	1819 mm (71.62 in)	1908 mm (75.1 in)	1938 mm (76.3 in)	1881 mm (74.1 in)	96	13.7 ms	7.1 ms

The following models are no longer available for order but are still covered by the information in this document.

Inactive models

Emitter/Receiver Models	Array Length (Y)	Housing Length (L1)	Distance Between Bracket Holes		Total Beams	Sensor Scan Time	
			L2	L3		Interlaced Scan	Straight Scan
MAE5416Q Emitter MAR5416NX485Q Receiver	1362 mm (53.62 in)	1451 mm (57.1 in)	1481 mm (58.3 in)	1424 mm (56.1 in)	72	10.4 ms	5.4 ms
MAE6616Q Emitter MAR6616NX485Q Receiver	1667 mm (65.62 in)	1755 mm (69.1 in)	1786 mm (70.3 in)	1729 mm (68.1 in)	88	12.6 ms	6.5 ms

Wiring

Connect the emitter and receiver cables as shown.

NPN Wiring Diagram

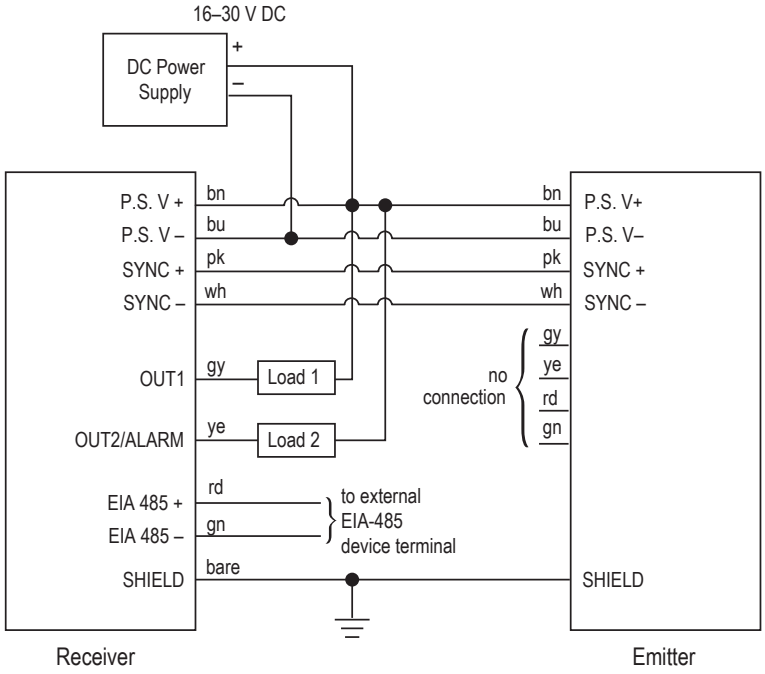

© Banner Engineering Corp. All rights reserved.
www.bannerengineering.com

PNP Wiring Diagram

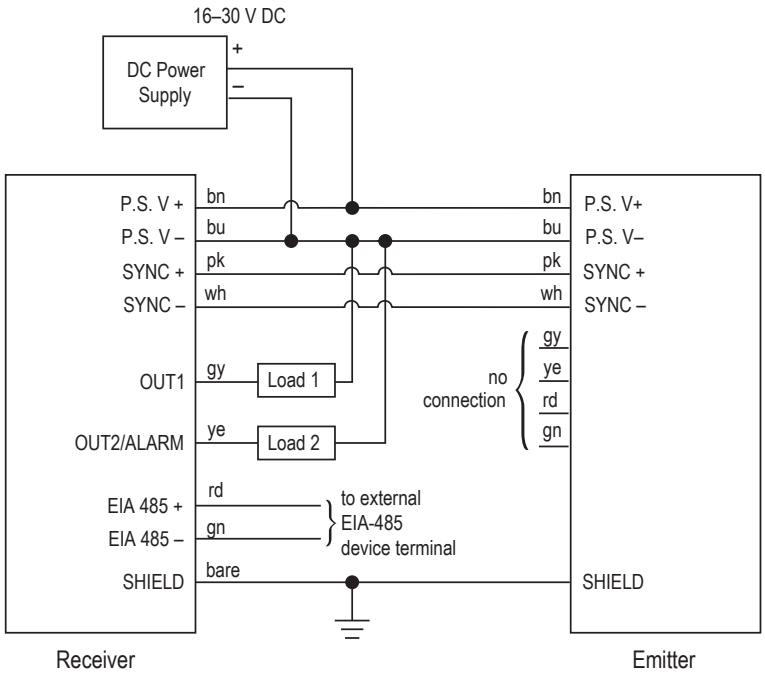

Receiver Output 1: (OUT1) is an open-collector transistor switch rated at 30 V DC maximum, 150 mA maximum. It is protected against overload and short circuits.

Receiver Output 2/Alarm: (OUT2/ALARM) is an open-collector transistor switch rated at 30 V DC maximum, 150 mA maximum. It is protected against overload and short circuits.

Both outputs can be configured as NPN (current sinking) or PNP (current sourcing).

Specifications

Supply Voltage and Power

16 V DC to 30 V DC; maximum power 12 watts

Supply Protection Circuitry

Protected against reverse polarity and transient voltages

Discrete Output Configuration

Two discrete outputs: Output 1 and Output 2

Outputs can be configured as either open collector NPN or PNP transistors. For the vehicle separation application, the outputs are factory configured as NPN outputs.

Discrete Output (either NPN or PNP) Ratings

Rated at 30 V DC max, 150 mA max load, short circuit protected

OFF-State Leakage Current: < 10 µA at 30 V DC

ON-State Saturation Voltage: < 1 V DC at 10 mA, < 1.5 V DC at 150 mA

Serial Data Outputs

EIA-485 interface

Baud rate 9600, 19.2 K, 38.4 K

8 data bits, 1 start bit, 1 stop bit, no parity

Sensor Scan Time

Worst-case response time is twice the scan time

Cable Connections

Emitter and receiver cables may not exceed 80 m (250 ft) each

150 mm (6.5 inch) PVC cable with M12 quick disconnect

Quick disconnect cordsets available separately

Status Indicators

Emitter: Red LED lights for proper operation

Receiver: Green – sensors aligned (> 3x excess gain); Amber– marginal alignment (1x-3x excess gain); Red – sensors misaligned or beam(s) blocked

Environmental Rating

IP65

UL Type 1 enclosure

Construction

Aluminum housing with black anodized finish; acrylic lens cover

Controller Programming

Via EIA-485 to Banner Sensors GUI software

Emitter/Receiver Range

Sensors < 1220 mm (4 ft) long: 16.5 m (55 ft)

Sensors ≥ 1220 mm (4 ft) long: 13.5 m (45 ft)

Minimum Object Sensitivity

Interlaced Mode: 25.4 mm (1.0 in) (assumes sensing is in the middle one-third of the scanning range; requires a minimum separation of emitter/receiver of 0.9 m (3 ft))

Other Scan Modes: 38.1 mm (1.5 in) (requires a minimum separation of emitter/receiver of 0.9 m (3 ft))

Operating Conditions

–40 °C to +70 °C (–40 °F to +158 °F)

95% maximum relative humidity (non-condensing)

© Banner Engineering Corp. All rights reserved.
www.bannerengineering.com

Application Notes

The emitter and receiver sync lines (pink and white wires) will be damaged if connected to the power supply

The receiver EIA-485 interface (red and green wires) will be damaged if connected to the power supply

Certifications

Banner Engineering BV
Park Lane, Culliganlaan 2F bus 3
1831 Diegem, BELGIUM

Required Overcurrent Protection

WARNING: Electrical connections must be made by qualified personnel in accordance with local and national electrical codes and regulations.

Overcurrent protection is required to be provided by end product application per the supplied table.

Overcurrent protection may be provided with external fusing or via Current Limiting, Class 2 Power Supply.

Supply wiring leads < 24 AWG shall not be spliced.

For additional product support, go to www.bannerengineering.com.

Supply Wiring (AWG)	Required Overcurrent Protection (A)	Supply Wiring (AWG)	Required Overcurrent Protection (A)
20	5.0	26	1.0
22	3.0	28	0.8
24	2.0	30	0.5

Banner Engineering Corp Limited Warranty

Banner Engineering Corp. warrants its products to be free from defects in material and workmanship for one year following the date of shipment. Banner Engineering Corp. will repair or replace, free of charge, any product of its manufacture which, at the time it is returned to the factory, is found to have been defective during the warranty period. This warranty does not cover damage or liability for misuse, abuse, or the improper application or installation of the Banner product.

THIS LIMITED WARRANTY IS EXCLUSIVE AND IN LIEU OF ALL OTHER WARRANTIES WHETHER EXPRESS OR IMPLIED (INCLUDING, WITHOUT LIMITATION, ANY WARRANTY OF MERCHANTABILITY OR FITNESS FOR A PARTICULAR PURPOSE), AND WHETHER ARISING UNDER COURSE OF PERFORMANCE, COURSE OF DEALING OR TRADE USAGE.

This Warranty is exclusive and limited to repair or, at the discretion of Banner Engineering Corp., replacement. **IN NO EVENT SHALL BANNER ENGINEERING CORP. BE LIABLE TO BUYER OR ANY OTHER PERSON OR ENTITY FOR ANY EXTRA COSTS, EXPENSES, LOSSES, LOSS OF PROFITS, OR ANY INCIDENTAL, CONSEQUENTIAL OR SPECIAL DAMAGES RESULTING FROM ANY PRODUCT DEFECT OR FROM THE USE OR INABILITY TO USE THE PRODUCT, WHETHER ARISING IN CONTRACT OR WARRANTY, STATUTE, TORT, STRICT LIABILITY, NEGLIGENCE, OR OTHERWISE.**

Banner Engineering Corp. reserves the right to change, modify or improve the design of the product without assuming any obligations or liabilities relating to any product previously manufactured by Banner Engineering Corp. Any misuse, abuse, or improper application or installation of this product or use of the product for personal protection applications when the product is identified as not intended for such purposes will void the product warranty. Any modifications to this product without prior express approval by Banner Engineering Corp will void the product warranties. All specifications published in this document are subject to change; Banner reserves the right to modify product specifications or update documentation at any time. Specifications and product information in English supersede that which is provided in any other language. For the most recent version of any documentation, refer to: www.bannerengineering.com.

For patent information, see www.bannerengineering.com/patents.

© Banner Engineering Corp. All rights reserved.
www.bannerengineering.com