# DXM700-B1 Wireless Controller

## Features

The DXM700-Bx Wireless Controller is an industrial wireless controller that facilitates Industrial Internet of Things (IIoT) applications. As a communications gateway, it interfaces local serial ports, local I/O ports, and local ISM radio devices to the Internet using a cellular connection or wired Ethernet network connection.

- **High-Performance Wireless Communication**—Uses Sure Cross® DX80 Wireless Gateway or MultiHop radio with 900 MHz or 2.4 GHz ISM bands available for long-range communication
- **Flexible and Customizable**—Expanded internal logic controller with action rules and ScriptBasic programming capable of developing simple or complex solutions to process, log, and control data to/from multiple wireless radios and sensors
- **Improved Speed and Memory**—Upgraded internal processor to use 2850 32-bit integer registers, 2000 floating-point registers, and 1050 non-volatile 32-bit integer registers; expanded ScriptBasic programming capability for faster script processing and ability to build more complex solutions with scripts
- **External Communications**—Cellular modem Internet connectivity
- **Compact Size**—Reduced size of 70 mm to consume less space on a DIN rail
- **Simple Sourcing Outputs**—Four PNP outputs (100 mA max at 30 V DC) available for local triggers
- **Industry Compatibility**—Automation protocols include Modbus/TCP, Modbus RTU, and EtherNet/IP™ for communications between PLCs, HMIs, or other local hosts.
- **Customizable Alerts**—Secure email for alerts using Banner Cloud Data Services
- Data logged to a removable SD card
- Interactive programmable user interface with LCD and LED indicators
- Industry-standard RS-485, Ethernet, and USB communication ports




## Models

| Model | Power In | Outputs | Radio |
|---|---|---|---|
| DXM700-B1 | 12-30 V DC | Four PNP | None |
| DXM700-B1PTL | | | Pre-programmed for pick-to-light integration (no radio) |
| DXM700-B1R1 | | | 900 MHz PE5 Performance Radio |
| DXM700-B1R2 | | | 900 MHz HE5 MultiHop Data Radio |
| DXM700-B1R3 | | | 2.4 GHz PE5 Performance Radio |
| DXM700-B1R4 | | | 2.4 GHz HE5 MultiHop Data Radio |

Custom products are available and are designated with a 6-digit number following the standard model number, such as DXM700-B1R1-123456. For more information about ordering a product customized for your specific needs, contact Banner Engineering Corp.

**Cellular Communication**—Controllers accept Banner LTE-M (CATM1) modems only. Cellular modems are ordered separately as accessories under the following part numbers:

*Purchase one of these cellular modem kit models*

| Cellular Kit Model | Kit Description | Important Notes |
|---|---|---|
| **SXI-CATM1VZW-001** | **Verizon CAT M1** cellular modem using Telit ME910 modem kit (Verizon part number SXIM1V). Includes a cellular modem, SIM card, internal adhesive antenna, external SMA antenna, and antenna cable. The SIM card is specific to the LTE-M technology and cannot be used in other cellular modems. Requires a LTE Verizon cellular wireless plan attached to the ICCID (SIM card) number and IMEI (International Mobile Equipment Identity) number. Cellular plans can be purchased through celldata.bannercds.com. | This cellular modem kit is for use in applications that require monthly data usage approaching 50 MB or 250 MB with push intervals no more frequent than every 10 minutes. This modem is only for use in the **contiguous United States** region. Please visit our support site for more details on coverage areas and cellular plan pricing. |
| **SXI-CATM1ATT-001** | **AT&T CAT M1** cellular modem using Telit ME910 modem kit (AT&T part number SXIM1A). Includes a cellular modem, SIM card, internal adhesive antenna, external SMA antenna, and antenna cable. The SIM card is specific to the LTE-M technology and cannot be used in other cellular modems. Requires a LTE AT&T cellular wireless plan attached to the ICCID (SIM card) number and IMEI (International Mobile Equipment Identity) number. Cellular plans can be purchased through celldata.bannercds.com. | This cellular modem kit is for use in applications that require monthly data usage approaching 50 MB or 250 MB with push intervals no more frequent than every 10 minutes. This modem is only for use in the **North American** region. Please visit our support site for more details on coverage areas and cellular plan pricing. |

Continued on page 2

Original Instructions
21-Aug-26

© Banner Engineering Corp. All rights reserved.
www.bannerengineering.com

207893
p/n: 207893 Rev. P

ПРОМЭЛЕКТРОНИКА/ sales@prom-elec.com

Continued from page 1

| Cellular Kit Model | Kit Description | Important Notes |
|---|---|---|
| **SXI-CATM1WW-001** | **Worldwide CAT M1** cellular modem using Telit ME910 model kit. Includes a cellular modem, SIM card, internal adhesive antenna, external SMA antenna, and antenna cable. The SIM card is specific to the LTE-M/NB-IoT technology and cannot be used in other cellular modems. Requires an LTE cellular plan attached to the ICCID (SIM card) number and IMEI (International Mobile Equipment Identity) number.<br>Cellular plans can be purchased through celldata.bannercds.com or a local roaming SIM provider. | This cellular modem kit is for use in applications that require monthly data usage approaching 50 MB or 250 MB with push intervals no more frequent than every 10 minutes. This modem is only for use in the **European** region within those countries that are members of the EU/EEA and adopt RED/CE compliant products.<br>Please visit our support site for more details on coverage areas and cellular plan pricing. |
| **SXI-LTE-001** | **Verizon LTE** cellular modem using Telit LE910 modem kit (Verizon part number SENSX002). Includes a cellular modem, SIM card, antenna, and antenna cable. The SIM card is specific to the LTE technology and cannot be used in other cellular modems. Requires a LTE Verizon cellular wireless plan attached to the ICCID (SIM card) number and IMEI (International Mobile Equipment Identity) number.<br>Cellular plans can be purchased through celldata.bannercds.com or a local roaming SIM provider. | This cellular modem is only used with the Wireless Network Bridge Hub (NET-HUB).<br>Please visit our support site for more details on coverage areas and cellular plan pricing. |

The DXM700-B2 models are no longer available for order, but are covered by the contents of this document.

# DXM700 Documentation

- DXM Wireless Controller Sell Sheet, p/n 194063
- DXM700-B1 and DXM700-B2 Wireless Controller Datasheet, p/n 207893
- DXM700-Bx Wireless Controller Instruction Manual, p/n 207894
- DXM ScriptBasic Instruction Manual, p/n 191745
- DXM Controller Configuration Quick Start, p/n 191247
- DXM Configuration Software v4 (p/n b_4496867)
- DXM Configuration Software Instruction Manual, p/n 209933
- DXM EDS Configuration file for Allen-Bradley PLCs
- EIP Configuration File for DXM7xx-BxR1 and R3 models (p/n 209068)
- Activating a Cellular Modem (p/n b_4419353)
- Additional technical notes and videos

For more information about the DXM700 family of products, including technical notes, configuration examples, and ScriptBasic program examples, please refer to the Banner website: www.bannerengineering.com

# System Overview

Banner's DXM Logic Controller integrates Banner's wireless radio, cellular connectivity, and local I/O to provide a platform for the Industrial Internet of Things (IIoT).

| DXM700 System Overview | | | |
|---|---|---|---|
| **Inputs and Outputs** | **Connectivity** | **Logic Controller** | **User Interface** |
| Discrete outputs | Cellular | Action rules | LCD screen |
| | Sure Cross® radios | Programming language | LED indicators |
| | Ethernet | Scheduler | |
| | RS-485 client and server | Push to the cloud | |
| | | Data logging | |

*Modbus registers for internal local registers (Modbus ID 199)*

| Local Registers | Type | Description |
|---|---|---|
| 1–845 | 32-bit integer | Local data registers |
| 846–849 | 32-bit integer | Reset, Constant, Timer |
| 851–900 | 32-bit non-volatile integer | Data flash, non-volatile |
| 901–1000 | | Reserved for internal use |
| 1001–5000 | floating point | Floating point registers, local data registers |
| 5001–7000 | 32-bit integer | Local data registers |
| 7001–8000 | 32-bit non-volatile integer | Data flash, non-volatile |
| > 10000 | | Read-only virtual registers, system-level data |


© Banner Engineering Corp. All rights reserved.
www.bannerengineering.com

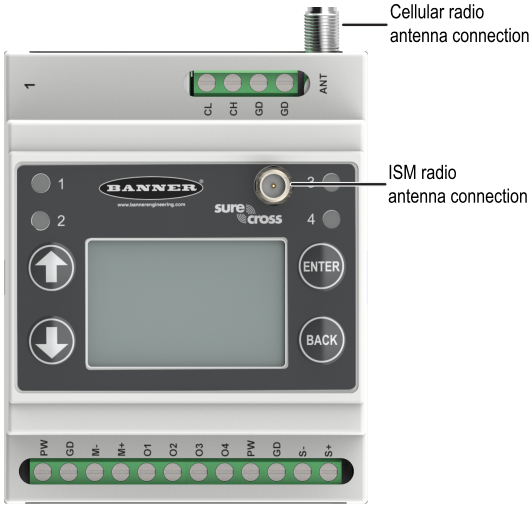


**Outputs**—Four discrete PNP outputs (supply voltage minus 2 V, 100mA maximum at 30 V DC)

**Connectivity**—The DXM700's wired and wireless connectivity options make it easy to share data between local and remote equipment. The cellular modem option eliminates the need for an IT infrastructure to connect remote equipment for sensing and control to IIoT cloud services. The integrated Sure Cross® wireless radio enables Modbus connectivity to remote sensors, indicators, and control equipment.

**Wired Connectivity**

Ethernet: Modbus TCP (Client/Server) or Ethernet/IP

Field Bus: Modbus RS-485 Client/Server

**Wireless Connectivity**

Sure Cross Wireless Radio: DX80 900 MHz, DX80 2.4 GHz, MultiHop 900 MHz, or MultiHop 2.4 GHz

Cellular modem: LTE-M (United States) or LTE-M/NB-IoT (outside the United States)

**Logic Controller**—Program the DXM700's logic controller using action rules and/or ScriptBasic language, which can execute concurrently. The control functions allow freedom when creating custom sensing and control sequences. The logic controller supports the Modbus protocol standards for data management, ensuring seamless integration with existing automation systems. File and LCD password protection is an option.

**Register Mapping**

Cyclical read rules from wireless devices or local wired Modbus devices that include optional scaling, error conditions, and the ability to activate a read rule

Cyclical or Change of State write rules to wireless devices or local wired Modbus devices with scaling

Modbus TCP Client read or write rules for external devices on the network

**Action Rules**

Thresholds (IF/THEN/ELSE) with timers, minimum on/off time, and logging options

Math/Logic Rules (arithmetic and bitwise operators)

Control Logic (logical operators and SR/T/D/JK flip flops)

Trending (multiple averaging filters)

Tracking (counts, on/off times)

Push data on conditions

**Scheduler**

Time/calendar-based events

Holiday skips

One-time events

Dynamic scheduler updating

Astronomical clock

**Optional Text Programming Language**

ScriptBasic to create variables, arrays, functions, loops, IF/THEN/ELSE, logical and arithmetic operators, API commands, register access, string functions and operators, time commands

**Data Logging**

Cyclic data/event logging

**User Interface**— A simple user interface consists of an LCD screen and four LED indicators.


© Banner Engineering Corp. All rights reserved.
www.bannerengineering.com

**User programmable LCD**

Bind Sure Cross radios

Conduct a site survey to evaluate the radio signal integrity of radios within the network

View register and output information

View system status and configuration

**API Interface**

Host Initiated control

Web service integration

**User Defined LED indicators**

Indicates the status of the DXM700, processes, or equipment

# Applications Overview

The DXM is ideal for smart factory and facilities applications, including:

- Productivity solutions, such as
  - Call for parts, service, or maintenance
  - Pick-to-light
  - OEE Tower light monitoring
- Predictive maintenance and continuous monitoring using
  - Vibration and temperature monitoring
  - Tank level monitoring
  - Non-contact condition monitoring
- Environmental monitoring and control, such as temperature and humidity monitoring

The DXM can provide visual indication using indicator lights, collect data, and interface with automation systems.

# Specifications

## Radio Specifications for Performance and MultiHop (500 mW)

**Radio Transmit Power (900 MHz, 500 mW radios)**

Conducted: 27 dBm (500 mW)

EIRP with the supplied antenna: < 36 dBm

**Radio Transmit Power (2.4 GHz radios)**

Conducted: < 18 dBm (65 mW)

EIRP with the supplied antenna: < 20 dBm (100 mW)

**Radio Range**

A 2 dB antenna ships with this device.

Transmit power and range are subject to many factors, including antenna gain, installation methods, characteristics of the application, and environmental conditions.

Please refer to the following documents for installation instructions and high-gain antenna options.

Installing Your Sure Cross® Radios (151514)
Conducting a Site Survey (133602)
Sure Cross® Antenna Basics (132113)

**Antenna Minimum Separation Distance**

900 MHz radios transmitting at ≥ 500 mW: 4.57 m (15 ft) with the supplied antenna

2.4 GHz radios transmitting at 65 mW: 0.3 m (1 ft) with the supplied antenna

**Antenna Connection**

Ext. Reverse Polarity SMA, 50 Ohms
Max Tightening Torque: 0.45 N·m (4 lbf·in)

**Spread Spectrum Technology**

FHSS (Frequency Hopping Spread Spectrum)

**Link Timeout (Performance)**

Gateway: Configurable via User Configuration Software
Node: Defined by Gateway

**Radio Packet Size (MultiHop)**

900 MHz: 175 bytes (85 Modbus registers)
2.4 GHz: 75 bytes (37 Modbus registers)

**900 MHz Compliance (SX7023EXT Radio Module)**

Radio module is indicated by the product label marking
Contains FCC ID: UE3SX7023EXT
Contains IC: 7044A-SX7023EXT

**2.4 GHz Compliance (SX243 Radio Module)**

Radio module is indicated by the product label marking
Contains FCC ID: UE3SX243
Radio Equipment Directive (RED) 2014/53/EU
Contains IC: 7044A-SX243

## FCC Part 15 Class A for Intentional Radiators

This equipment has been tested and found to comply with the limits for a Class A digital device, pursuant to Part 15 of the FCC Rules. These limits are designed to provide reasonable protection against harmful interference when the equipment is operated in a commercial environment. This equipment generates, uses, and can radiate radio frequency energy and, if not installed and used in accordance with the instruction manual, may cause harmful interference to radio communications. Operation of this equipment in a residential area is likely to cause harmful interference in which case the user will be required to correct the interference at his own expense.

(Part 15.21) Any changes or modifications not expressly approved by the party responsible for compliance could void the user's authority to operate this equipment.

## Industry Canada Statement for Intentional Radiators

This device contains licence-exempt transmitters(s)/receiver(s) that comply with Innovation, Science and Economic Development Canada's licence-exempt RSS(s). Operation is subject to the following two conditions:

1. This device may not cause interference.


© Banner Engineering Corp. All rights reserved.
www.bannerengineering.com

2. This device must accept any interference, including interference that may cause undesired operation of the device.

Cet appareil contient des émetteurs/récepteurs exemptés de licence conformes à la norme Innovation, Sciences, et Développement économique Canada. L'exploitation est autorisée aux deux conditions suivantes:

1. L'appareil ne doit pas produire de brouillage.
2. L'utilisateur de l'appareil doit accepter tout brouillage radioélectrique subi, même si le brouillage est susceptible d'en compromettre le fonctionnement.

## Environmental Specifications for the DXM700

**Operating Conditions**

–20 °C to +60 °C (–4 °F to +140 °F)

95% maximum relative humidity (non-condensing)

Radiated Immunity: 10 V/m (EN 61000-4-3)

Operating the devices at the maximum operating conditions for extended periods can shorten the life of the device.

**Shock and Vibration**

All models meet IEC 60068-2-6 and IEC 60068-2-27 testing criteria

Shock: 30G 11 ms duration, half sine wave per IEC 60068-2-27

Vibration: 10 Hz to 55 Hz, 0.5 mm peak-to-peak amplitude per IEC 60068-2-6

**Environmental Rating**

IP20

## RS-485 Communication Specifications

**Communication Hardware (MultiHop RS-485)**

Interface: 2-wire half-duplex RS-485

Baud rates: 9.6k, 19.2k (default), or 38.4k via DIP switches; 1200 and 2400 via the MultiHop Configuration Software

Data format: 8 data bits, no parity, 1 stop bit

## DXM700-B1 and B2 Power and IO Specifications

**Supply Voltage**

12 to 30 V DC (use only with a suitable Class 2 power supply (UL) or a Limited Power Source (LPS) (CE) power supply)

**Power Consumption**

35 mA average at 12 Volts (exclusive of load)

**Logging**

8 GB maximum; removable Micro SD card format

**Security Protocols**

VPN, SSL, and HTTPS

**Power Connections**

DXM700-B1: Wiring terminals

DXM700-B2: Barrel jack

**Construction**

Polycarbonate; DIN rail mount option

**Communication Protocols**

Modbus RTU Client/Server, Modbus TCP, and Ethernet/IP

**Discrete Outputs**

Four, PNP/Sourcing

Update Rate: 125 milliseconds

ON Condition: Supply minus 2 V

OFF Condition: Less than 2 V

**Discrete Output Rating (PNP)**

100 mA max current at 30 V DC

ON-State Saturation: Less than 3 V at 100 mA

OFF-state Leakage: Less than 10 µA

**Certifications**

CE/UKCA approval only applies to 2.4 GHz models; NOM approval only applies to the DXM700-B1R2 model; Thai approval only applies to the DXM700-B1R4 model

Banner Engineering BV
Park Lane, Culliganlaan 2F bus 3
1831 Diegem, BELGIUM

Turck Banner LTD Blenheim House
Blenheim Court
Wickford, Essex SS11 8YT
GREAT BRITAIN




เครื่องโทรคมนาคมและอุปกรณ์นี้มีความสอดคล้องตามมาตรฐานหรือข้อกำหนดทางเทคนิคของ กสทช.
(Approval only applies to the DXM700-B1R4 model)

ANATEL
*Agência Nacional de Telecomunicações*
03737-22-04042


© Banner Engineering Corp. All rights reserved.
www.bannerengineering.com

**Required Overcurrent Protection**

**WARNING:** Electrical connections must be made by qualified personnel in accordance with local and national electrical codes and regulations.

Overcurrent protection is required to be provided by end product application per the supplied table.

Overcurrent protection may be provided with external fusing or via Current Limiting, Class 2 Power Supply.

Supply wiring leads < 24 AWG shall not be spliced.

For additional product support, go to www.bannerengineering.com.

| Supply Wiring (AWG) | Required Overcurrent Protection (A) | Supply Wiring (AWG) | Required Overcurrent Protection (A) |
|---|---|---|---|
| 20 | 5.0 | 26 | 1.0 |
| 22 | 3.0 | 28 | 0.8 |
| 24 | 2.0 | 30 | 0.5 |

Modbus® is a registered trademark of Schneider Electric USA, Inc.

## ANATEL

Este equipamento não tem direito à proteção contra interferência prejudicial e não pode causar interferência em sistemas devidamente autorizados. Para maiores informações, consulte o site da ANATEL www.gov.br/anatel/pt-br/

# DXM700 Dimensions

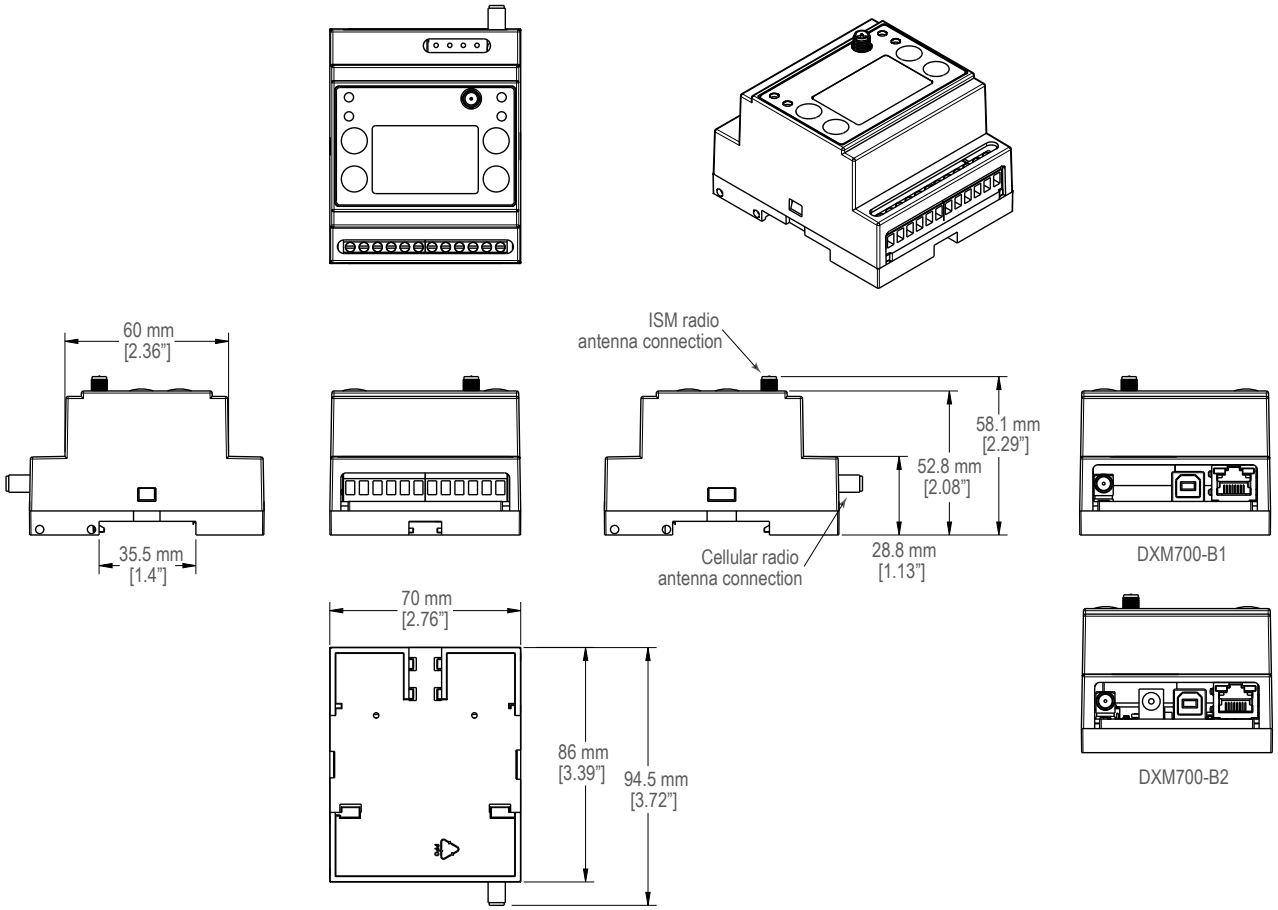


All measurements are listed in millimeters [inches], unless noted otherwise. The measurements provided are subject to change.

# Accessories

For a complete list of all the accessories for the Sure Cross wireless product line, please download the Accessories List (p/n b_3147091).


© Banner Engineering Corp. All rights reserved.
www.bannerengineering.com

**Cordsets**

BC-M12F5-22-2—5-pin M12, straight, single-ended, 2 m
BC-M12F5-22-10—5-pin M12, straight, single-ended, 10 m
BC-M12F5A-22-2—5-pin M12, right-angle, single-ended, 2 m
BC-M12F5A-22-10—5-pin M12, right-angle, single-ended, 10 m

**Static and Surge Suppressor**

BWC-PRC827-DC—Surge Suppressor, bulkhead, DC Blocking, N-Type Female, N-Type Male

**Short-Range Omni Antennas**

BWA-2O2-D—Antenna, Dome, 2.4 GHz, 2 dBi, RP-SMA Box Mount
BWA-9O2-D—Antenna, Dome, 900 MHz, 2 dBi, RP-SMA Box Mount
BWA-9O2-RA—Antenna, Rubber Fixed Right Angle, 900 MHz, 2 dBi, RP-SMA Male Connector

**Medium-Range Omni Antennas**

BWA-9O5-C—Antenna, Rubber Swivel, 900 MHz 5 dBi, RP-SMA Male Connector
BWA-2O5-C—Antenna, Rubber Swivel, 2.4 GHz 5 dBi, RP-SMA Male Connector

**Enclosures and DIN Rail Kits**

BWA-AH864—Enclosure, Polycarbonate, with Opaque Cover, 8 × 6 × 4
BWA-AH1084—Enclosure, Polycarbonate, with Opaque Cover, 10 × 8 × 4
BWA-AH12106—Enclosure, Polycarbonate, with Opaque Cover, 12 × 10 × 6
BWA-AH8DR—DIN Rail Kit, 8", 2 trilobular/self-threading screws
BWA-AH10DR—DIN Rail Kit, 10", 2 trilobular/self-threading screws
BWA-AH12DR—DIN Rail Kit, 12", 2 trilobular/self-threading screws

**Misc Accessories**

BWA-CG.5-3X5.6-10—Cable Gland Pack: 1/2-inch NPT, Cordgrip for 3 holes of 2.8 to 5.6 mm diam, 10 pack
BWA-HW-052— Cable Gland and Vent Plug Pack: includes 1/2-inch NPT gland, 1/2-inch NPT multi-cable gland, and 1/2-inch NPT vent plug, one each

**Antenna Cables**

BWC-1MRSMN05—LMR200 RP-SMA to N-Type Male, 0.5 m
BWC-2MRSFRS6—LMR200, RP-SMA Male to RP-SMA Female Bulkhead, 6 m
BWC-4MNFN6—LMR400 N-Type Male to N-Type Female, 6 m

**Long-Range Omni Antennas**

BWA-9O8-AS—Antenna, Fiberglass, 3/4 Wave, 900 MHz, 8 dBi, N-Type Female Connector
BWA-2O8-A—Antenna, Fiberglass, 2.4 GHz, 8 dBi, N-Type Female Connector

**Long-Range Yagi Antennas**

BWA-9Y10-A—Antenna, 900 MHz, 10 dBd, N-Type Female Connector

**Cellular Antenna**

BWA-CELLA-002—Cellular multiband, 2 dBi, RP-SMA male connection, 6.3 inch blade style. Datasheet: b_4475176

**Power Supplies**

PSD-24-4—DC Power Supply, Desktop style, 3.9 A, 24 V DC, Class 2, 4-pin M12 quick disconnect (QD)
PSDINP-24-06—DC power supply, 0.63 Amps, 24 V DC, with DIN Rail Mount, Class I Division 2 (Groups A, B, C, D) Rated
PSDINP-24-13 —DC power supply, 1.3 Amps, 24 V DC, with DIN Rail Mount, Class I Division 2 (Groups A, B, C, D) Rated
PSDINP-24-25 — DC power supply, 2.5 Amps, 24 V DC, with DIN Rail Mount, Class I Division 2 (Groups A, B, C, D) Rated
PSW-24-1—DC power supply with multi-blade wall plug, 100–240 V AC 50/60 Hz input, 24 V DC 1 A output, UL Listed Class 2, 4-pin female M12 connector
PSWB-24-1—DC power supply with multi-blade wall plug,100–240 V AC 50/60 Hz input, 24 V DC 1 A output, UL Listed Class 2, barrel jack connector

# Product Support and Maintenance

## Cleaning Instructions for the Product Label

Clean the product label with dry or water-dampened cloth only.

## Warnings

**WARNING:**
- **Do not use this device for personnel protection**
- Using this device for personnel protection could result in serious injury or death.
- This device does not include the self-checking redundant circuitry necessary to allow its use in personnel safety applications. A device failure or malfunction can cause either an energized (on) or de-energized (off) output condition.

**IMPORTANT:** Please download the complete DXM700-Bx Wireless Controller technical documentation, available in multiple languages, from www.bannerengineering.com for details on the proper use, applications, Warnings, and installation instructions of this device.

**IMPORTANT:** Por favor descargue desde www.bannerengineering.com toda la documentación técnica de los DXM700-Bx Wireless Controller, disponibles en múltiples idiomas, para detalles del uso adecuado, aplicaciones, advertencias, y las instrucciones de instalación de estos dispositivos.

**IMPORTANT:** Veuillez télécharger la documentation technique complète des DXM700-Bx Wireless Controller sur notre site www.bannerengineering.com pour les détails sur leur utilisation correcte, les applications, les notes de sécurité et les instructions de montage.

**Install and properly ground a qualified surge suppressor when installing a remote antenna system.** Remote antenna configurations installed without surge suppressors invalidate the manufacturer's warranty. Keep the ground wire as short as possible and make all ground connections to a single-point ground system to ensure no ground loops are created. No surge suppressor can absorb all lightning strikes; do not touch the Sure Cross® device or any equipment connected to the Sure Cross® device during a thunderstorm.

**Exporting Sure Cross® Radios.** It is our intent to fully comply with all national and regional regulations regarding radio frequency emissions. **Customers who want to re-export this product to a country other than that to which it was sold must ensure the device is approved in the destination country.** The Sure Cross wireless products were certified for use in these countries using the antenna that ships with the product. When using other antennas, verify you are not exceeding the transmit power levels allowed by local governing agencies. This device has been designed to operate with the antennas listed on Banner Engineering's website and having a maximum gain of 9 dBm. Antennas not included in this list or having a gain greater than 9 dBm are strictly prohibited for use with this device. The required antenna impedance is 50 ohms. To reduce potential radio interference to other users, the antenna type and its gain should be so chosen such that the equivalent isotropically radiated power (EIRP) is not more than that permitted for successful communication. Consult with Banner Engineering Corp. if the destination country is not on this list.


© Banner Engineering Corp. All rights reserved.
www.bannerengineering.com

**IMPORTANT:**

- **Never operate a radio without connecting an antenna**
- Operating radios without an antenna connected will damage the radio circuitry.
- To avoid damaging the radio circuitry, never apply power to a Sure Cross® Performance or Sure Cross® MultiHop radio without an antenna connected.

**IMPORTANT:**

- **Electrostatic discharge (ESD) sensitive device**
- ESD can damage the device. Damage from inappropriate handling is not covered by warranty.
- Use proper handling procedures to prevent ESD damage. Proper handling procedures include leaving devices in their anti-static packaging until ready for use; wearing anti-static wrist straps; and assembling units on a grounded, static-dissipative surface.

# Notas Adicionales (con Antena)

Información México: La operación de este equipo está sujeta a las siguientes dos condiciones: 1) es posible que este equipo o dispositivo no cause interferencia perjudicial y 2) este equipo debe aceptar cualquier interferencia, incluyendo la que pueda causar su operación no deseada.

Banner es una marca registrada de Banner Engineering Corp. y podrán ser utilizadas de manera indistinta para referirse al fabricante. "Este equipo ha sido diseñado para operar con las antenas tipo Omnidireccional para una ganancia máxima de antena de 6 dBd y Yagi para una ganancia máxima de antena 10 dBd que en seguida se enlistan. También se incluyen aquellas con aprobación ATEX tipo Omnidireccional siempre que no excedan una ganancia máxima de antena de 6dBd. El uso con este equipo de antenas no incluidas en esta lista o que tengan una ganancia mayor que 6 dBd en tipo omnidireccional y 10 dBd en tipo Yagi, quedan prohibidas. La impedancia requerida de la antena es de 50 ohms."

**Approved Antennas**

**BWA-9O2-C**--Antena, Omni 902-928 MHz, 2 dBd, junta de caucho, RP-SMA Macho
**BWA-9O5-C**--Antena, Omni 902-928 MHz, 5 dBd, junta de caucho, RP-SMA Macho
**BWA-9O6-A**--Antena, Omni 902-928 MHz, 6 dBd, fibra de vidrio, 1800mm, N Hembra
**BWA-9Y10-A**--Antena, Yagi, 900 MHz, 10 dBd, N Hembra

# Mexican Importer

Banner Engineering de Mèxico, S. de R.L. de C.V. | David Alfaro Siqueiros 103 Piso 2 Valle oriente | San Pedro Garza Garcia Nuevo Leòn, C. P. 66269

81 8363.2714

# Banner Engineering Corp Limited Warranty

Banner Engineering Corp. warrants its products to be free from defects in material and workmanship for one year following the date of shipment. Banner Engineering Corp. will repair or replace, free of charge, any product of its manufacture which, at the time it is returned to the factory, is found to have been defective during the warranty period. This warranty does not cover damage or liability for misuse, abuse, or the improper application or installation of the Banner product.

**THIS LIMITED WARRANTY IS EXCLUSIVE AND IN LIEU OF ALL OTHER WARRANTIES WHETHER EXPRESS OR IMPLIED (INCLUDING, WITHOUT LIMITATION, ANY WARRANTY OF MERCHANTABILITY OR FITNESS FOR A PARTICULAR PURPOSE), AND WHETHER ARISING UNDER COURSE OF PERFORMANCE, COURSE OF DEALING OR TRADE USAGE.**

This Warranty is exclusive and limited to repair or, at the discretion of Banner Engineering Corp., replacement. **IN NO EVENT SHALL BANNER ENGINEERING CORP. BE LIABLE TO BUYER OR ANY OTHER PERSON OR ENTITY FOR ANY EXTRA COSTS, EXPENSES, LOSSES, LOSS OF PROFITS, OR ANY INCIDENTAL, CONSEQUENTIAL OR SPECIAL DAMAGES RESULTING FROM ANY PRODUCT DEFECT OR FROM THE USE OR INABILITY TO USE THE PRODUCT, WHETHER ARISING IN CONTRACT OR WARRANTY, STATUTE, TORT, STRICT LIABILITY, NEGLIGENCE, OR OTHERWISE.**

Banner Engineering Corp. reserves the right to change, modify or improve the design of the product without assuming any obligations or liabilities relating to any product previously manufactured by Banner Engineering Corp. Any misuse, abuse, or improper application or installation of this product or use of the product for personal protection applications when the product is identified as not intended for such purposes will void the product warranty. Any modifications to this product without prior express approval by Banner Engineering Corp will void the product warranties. All specifications published in this document are subject to change; Banner reserves the right to modify product specifications or update documentation at any time. Specifications and product information in English supersede that which is provided in any other language. For the most recent version of any documentation, refer to: www.bannerengineering.com.

For patent information, see www.bannerengineering.com/patents.


© Banner Engineering Corp. All rights reserved.
www.bannerengineering.com