SI-HG(Z)63 Hinge Wing Safety Interlock Switch Instruction Manual

Original Instructions
p/n: 129465 Rev. I
May 17, 2024
© Banner Engineering Corp. All rights reserved.

ПРОМЭЛЕКТРОНИКА/ sales@prom-elec.com

Contents

Chapter 1 Product Description
SI-HG63 Models 3

Chapter 2 Important... Read this before proceeding! 5

Chapter 3 SI-HG(Z)63 Overview
Installation Requirements 6
Pass-Through Hazards and Perimeter Guarding 7

Chapter 4 SI-HG(Z)63 Mechanical Installation
Setting the Switch Point 8
Fine-Adjusting the Switch Point Setting 10
Relocating the Switch Point Setting or Repositioning the Hinge 10

Chapter 5 Electrical Installation
Connection to a Machine 13
Monitoring Series-Connected Safety Switches 14

Chapter 6 SI-HG(Z)63 Specifications
SI-HG63 Dimensions 17

Chapter 7 Guard Opening Calculation (before switching) 20

Chapter 8 Accessories
Safety Monitoring Devices 21
Cordsets 21
SI-HG63 Blank Hinge 22
SI-HG63 Replacement Accessory Kit 22

Chapter 9 Product Support and Maintenance
Checkout 23
Repairs 23
Standards and Regulations 23
US Application Standards 23
International/European Standards 23
EU/UK Declaration of Conformity (DoC) 24
Banner Engineering Corp Limited Warranty 24
..... 24

Chapter Contents

SI-HG63 Models 3

Chapter 1 Product Description

The SI-HG(Z)63 Hinge Wing Safety Interlock Switch attaches with a load-bearing hinge.

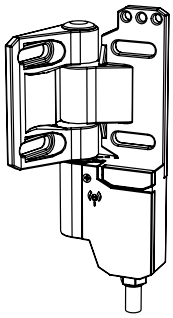

- Safety switching point is repositionable
- Switch components are protected from mechanical impact for superior performance to actuator-activated safety switches (IP67 or IP69 rated)
- Hinge operates to a full 270° range of motion; safety switching point (guard-closed position) is adjustable over the full 0° to 270° operating range
- Stainless steel hinge supports a load of 1800 N (180 Kg). Zinc die-cast hinge supports a load of 1200 N (120 Kg).
- When properly interfaced or used with an appropriate controller, two SI-HG(Z)63 switches on an individual gate or guard can achieve safety category 4, per ISO 13849-1

SI-HG63 Models

Model	Construction	Housing Style
SI-HG63FQDR	Stainless Steel	Inline QD - With QD facing down, the switch is mounted on the right side of the hinge
SI-HGZ63FQDR	Zinc Die-cast	
SI-HG63F5MR-W	Stainless Steel	Inline Cable - With cable exiting down, the switch is mounted on the right side of the hinge, IP69 protection class rating
SI-HG63FQDL	Stainless Steel	Inline QD - With QD facing down, the switch is mounted on the left side of the hinge
SI-HGZ63FQDL	Zinc Die-cast	
SI-HG63F5ML-W	Stainless Steel	Inline Cable - With cable exiting down, the switch is mounted on the left side of the hinge, IP69 protection class rating
SI-HG63FQDRR	Stainless Steel	Right-Angle QD - With the switch body down, the switch is mounted on the right of the hinge
SI-HGZ63FQDRR	Zinc Die-cast	
SI-HG63F5MRR-W	Stainless Steel	Right-Angle Cable - With the switch body down, the switch is mounted on the right side of the hinge, IP69 protection class rating
SI-HG63F5MLR-W	Stainless Steel	Right-Angle Cable - With the switch body down, the switch is mounted on the left side of the hinge, IP69 protection class rating
SI-HG63F5MB-W	Stainless Steel	Inline Cables - With cables exiting up and down, switches are mounted on both sides of the hinge, IP69 protection class rating
SI-HG63A	Stainless Steel	Blank Hinge; same mechanical as switch minus switch component
SI-HGZ63A	Zinc Die-cast	

A complete safety system is composed of two SI-HG(Z)63 switches per gate/guard (SI-HG63F5MB-W is two switches so only one is needed for a complete system), cables (for QD models), and a safety monitoring device.

© Banner Engineering Corp. All rights reserved.

Contact Configuration (Gate Closed State) for Quick Disconnect Models

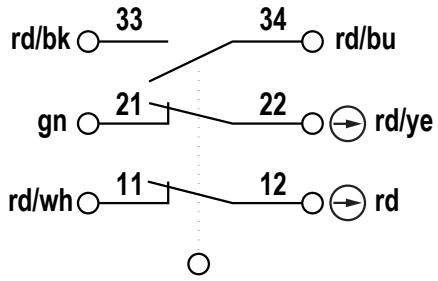

Contact Configuration (Gate Open State) for Quick Disconnect Models

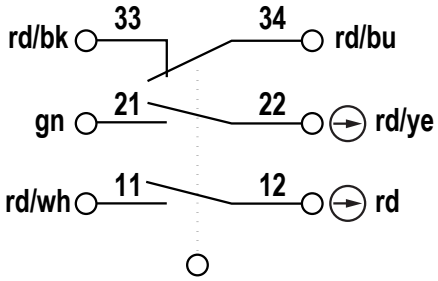

Contact Configuration (Gate Closed State) for Cabled Models

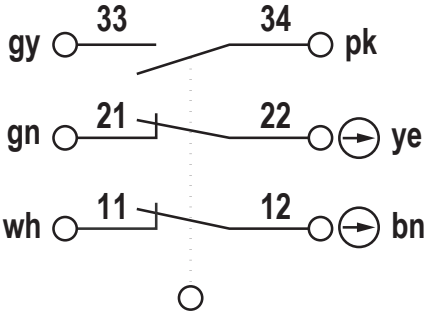

Contact Configuration (Gate Open State) for Cabled Models

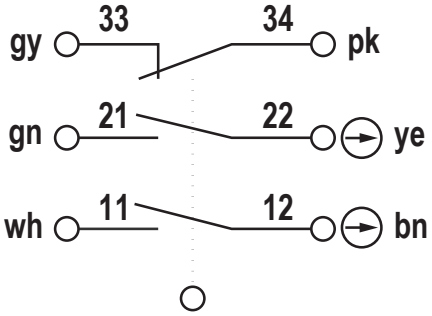

Switching Diagram

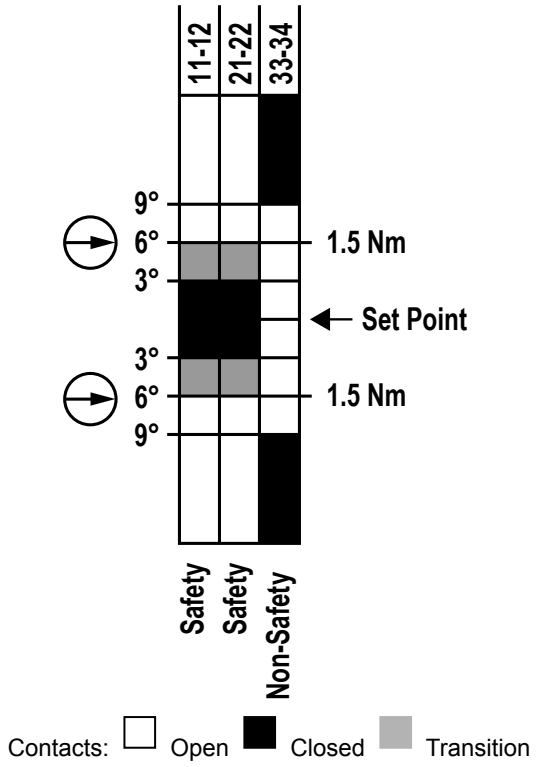

Terminals 33 and 34 are non-safety.

NOTE: This symbol ⊕ for a positive-opening safety contact (IEC 60947-5-1) is used in the switching diagram to identify the point in actuator travel where the normally closed safety contact is fully open.

© Banner Engineering Corp. All rights reserved.

Chapter Contents

Chapter 2 Important... Read this before proceeding!

The user is responsible for satisfying all local, state, and national laws, rules, codes, and regulations relating to the use of this product and its application. Banner Engineering Corp. has made every effort to provide complete application, installation, operation, and maintenance instructions. Please contact a Banner Applications Engineer with any questions regarding this product.

The user is responsible for making sure that all machine operators, maintenance personnel, electricians, and supervisors are thoroughly familiar with and understand all instructions regarding the installation, maintenance, and use of this product, and with the machinery it controls. The user and any personnel involved with the installation and use of this product must be thoroughly familiar with all applicable standards, some of which are listed within the specifications. Banner Engineering Corp. makes no claim regarding a specific recommendation of any organization, the accuracy or effectiveness of any information provided, or the appropriateness of the provided information for a specific application.

© Banner Engineering Corp. All rights reserved.

Chapter Contents

Installation Requirements 6
Pass-Through Hazards and Perimeter Guarding 7

Chapter 3 SI-HG(Z)63 Overview

Use the SI-HG(Z)63 Hinge Wing Safety Interlock Switch to monitor the position of a guard to detect the movement, opening, or removal. A "guard" can be a gate, door, cover, panel, barrier or other physical means that separates an individual from a hazard. The SI-HG(Z)63 will issue a signal to the machine control system to prevent or stop (halt) hazardous situations when the guard is not in the proper position. The SI-HG(Z)63 is designed for non-locking guarding applications, unless another means of locking is provided.

Installation Requirements

The following general requirements and considerations apply to the installation of interlocked gates and guards for the purpose of safeguarding. In addition, the user must refer to the relevant regulations and comply with all necessary requirements. See ANSI B11.19, or ISO 14119 and ISO 14120, or the appropriate standard.

Hazards guarded by the interlocked guard must be prevented from operating until the guard is closed; a stop command must be issued to the guarded machine if the guard opens while the hazard is present. Closing the guard must not, by itself, initiate hazardous motion; a separate procedure must be required to initiate the motion. The safety switches must not be used as a mechanical or end-of-travel stop.

Locate the guard an adequate distance from the danger zone (so the hazard has time to stop before the guard is opened sufficiently to provide access to the hazard). The guard must open either laterally or away from the hazard, not into the safeguarded area. The guard also should not be able to close by itself and activate the interlocking circuitry. The installation must prevent personnel from reaching over, under, around or through the guard to access the hazard. Any openings in the guard must not allow access to the hazard—see ANSI B11.19, ISO 13857, or the appropriate standard. The guard must be strong enough and designed to protect personnel and contain hazards within the guarded area that can be ejected, dropped, or emitted by the machine.

Design and install the safety interlocking switches and actuators so that they cannot be easily defeated. Mount them securely so that their physical position cannot shift, using reliable fasteners that require a tool to remove. Mounting slots in the housing, if provided, are for initial adjustment only; final mounting holes (round) must be used for permanent location.

The normally closed safety contacts are of a "positive-opening" design. Positive-opening operation causes the contacts to be forced open, without the use of springs, when the actuator is disengaged or moved from its home position. In addition, the switch(es) must be mounted in a "positive mode", to move/disengage the actuating system and actuator from its home position and open the normally closed contact, when the guard opens.

WARNING:

- **Properly Install the Interlocked Guards**
- Failure to follow these guidelines could result in serious injury or death.
- At a minimum, the interlocked guard must prevent hazards when not fully closed and must prevent access to the hazards through any opening in the guard.
- Install the safety switches and actuators so they cannot be easily defeated and are not used as a mechanical or end-of-travel stop. Mount at least one switch in a positive mode and verify it opens the normally closed contact when the guard opens.
- The user must refer to the relevant regulations and comply with all necessary requirements. See ANSI B11.19, or ISO 14119 and ISO 14120, or the appropriate standard.

CAUTION:

- **Do not use the safety switch as a mechanical or end-of-travel stop.**
- Catastrophic damage can cause the safety switch to fail in an unsafe manner (that is, loss of the switching action).
- Limit the movement or rotation of the guard to prevent damage to the safety switch or the actuator.

© Banner Engineering Corp. All rights reserved.

See "SI-HG(Z)63 Mechanical Installation" on page 8, "Electrical Installation" on page 13, and "SI-HG(Z)63 Specifications" on page 16 for additional information.

Pass-Through Hazards and Perimeter Guarding

A pass-through hazard is associated with applications where personnel may pass through a safeguard (which issues a stop command to remove the hazard), and then continues into the guarded area, such as in perimeter guarding. Subsequently, their presence is no longer detected, and the related danger becomes the unexpected start or restart of the machine while personnel are within the guarded area.

Eliminate or reduce pass-through hazards whenever possible—see ANSI B11.19 and ANSI B11.20 or ISO 11161. One method to mitigate the risk is to ensure that once tripped, either the safeguarding device, the safety related part of the control system, or the guarded machine's MSCs/MPCEs will latch in an OFF condition. The latch must require a deliberate manual action to reset that is separate from the normal means of machine cycle initiation.

This method relies upon the location of the reset switch as well as safe work practices and procedures to prevent an unexpected start or restart of the guarded machine. All reset switches must be:

- Outside the guarded area
- Located to allow the switch operator a full, unobstructed view of the entire guarded area while the reset is performed
- Out of reach from within the guarded area
- Protected against unauthorized or inadvertent operation (such as through the use of rings or guards)

If any areas within the guarded area are not visible from the reset switch, additional safeguarding must be provided.

WARNING:

- **Perimeter guarding applications**
- Failure to observe this warning could result in serious injury or death.
- Use lockout/tagout procedures per ANSI Z244.1, or use additional safeguarding as described by ANSI B11.19 safety requirements or other applicable standards if a passthrough hazard cannot be eliminated or reduced to an acceptable level of risk.

© Banner Engineering Corp. All rights reserved.

Chapter Contents

Setting the Switch Point 8
Fine-Adjusting the Switch Point Setting 10
Relocating the Switch Point Setting or Repositioning the Hinge 10

Chapter 4 SI-HG(Z)63 Mechanical Installation

IMPORTANT: Install a safety switch in a manner that discourages tampering or defeat. Mount switches to prevent bypassing of the switching function at the terminal chamber or Quick Disconnect (QD). A switch and its actuator must never be used as a mechanical stop. Overtravel may cause damage to switch.

All mounting hardware is supplied by the user. Fasteners must be of sufficient strength to guard against breakage. Use of permanent fasteners or locking hardware is recommended to prevent the loosening or displacement of the actuator and the switch body. The mounting holes in the switch body and the actuator accept M6 screws.

1. Make sure that excessive force is not exerted by the weight and swing of the guard, gate, or door.
2. Position blank hinges (if used) and the hinge switch(es) on the guard or gate while it is in its fully closed and latched position.
3. Verify that the axis of rotation is identical for all hinges used. Typically, this is accomplished by using a straight edge along the long flat edge to verify that the switch bodies are parallel.
4. Check the rotation of the guard or gate for misalignment and binding after the mounting hardware is secure.

Hinge Switch Installation

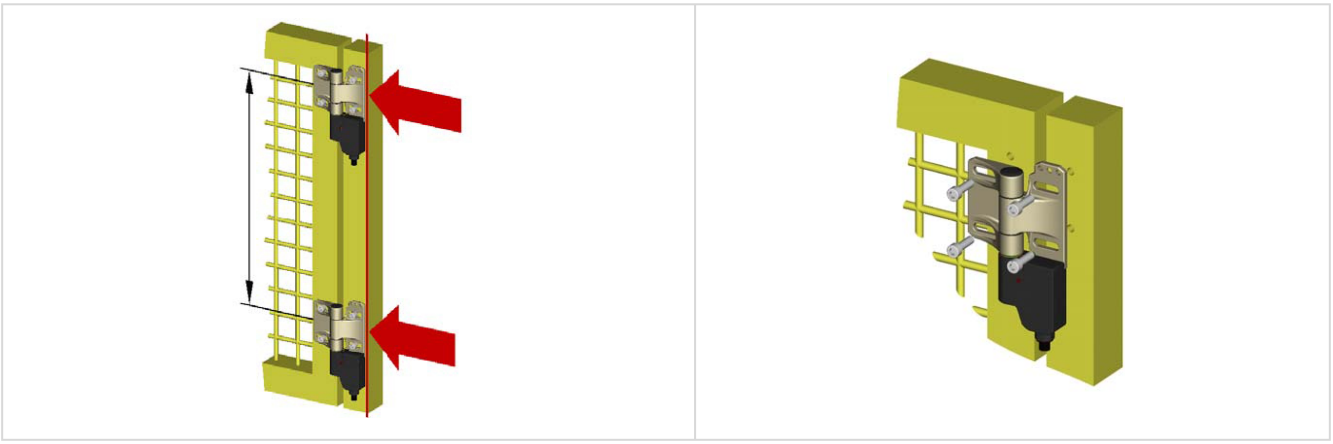

Setting the Switch Point

The normally closed safety contacts will be open through the entire 270-degree range of motion until the switch point is set.

1. Verify that the hinge switches (and blank hinges, if used) are properly mounted and that the guard or gate swings freely throughout its range of motion without binding. If binding is noticed, repeat the steps listed in "SI-HG(Z)63 Mechanical Installation" on page 8.
2. Place the guard in its closed and latched position.

© Banner Engineering Corp. All rights reserved.

Move door or hatch to closed position and secure

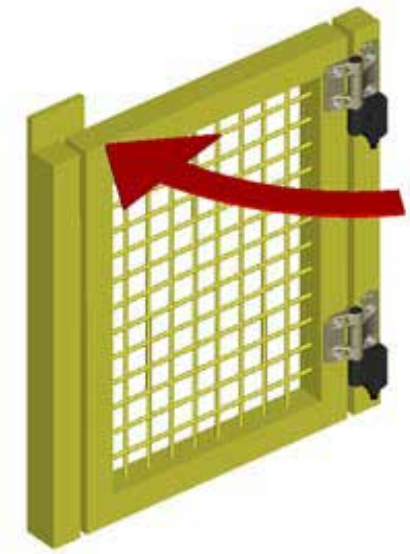

3. Double-check that the installation is correct and the resulting switching action is as expected.
4. To set the switching point, move the door or hatch to its closed position and fasten it (for example, by a stop) to avoid any swiveling.
5. Tighten by hand the set screw with the supplied bit. The maximum torque is 2 N·m (1.48 lb·ft). Do not over-tighten or damage resulting in the loss of the switch point can occur. After you start tightening the set screw, do not change the position of the hinge until after the setting process is complete.

Tight the setscrew

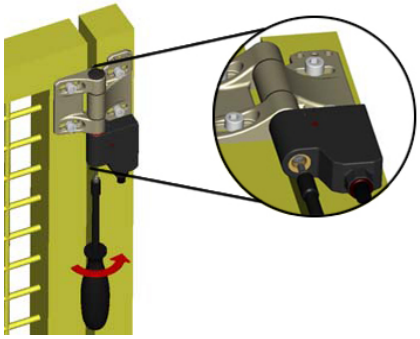

6. When the switching point is correctly set, a green ring, with no red showing, replaces the red color ring (located in the gap between the hinge and the switch). This occurs when the set screw meets with resistance and firmly engages.

Red to green color ring

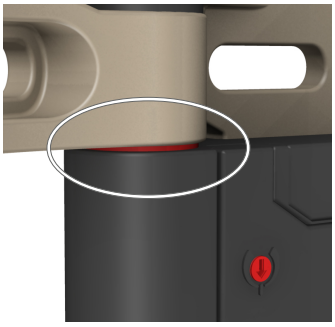

7. Insert the supplied plugs into the topside of the hinge, and the bottom of the switch, to protect the switch from dirt or debris.
8. Test the function of the switch to verify the proper (expected) operation.

© Banner Engineering Corp. All rights reserved.

Fine-Adjusting the Switch Point Setting

Use the adjustment screw to adjust the setting by ±1.5°. This can be useful to compensate for deviations during installation or later (for example, a misplaced stop or machine vibration). To adjust, insert the supplied screwdriver into the switch point adjustment slot and turn clockwise to increase or counterclockwise to decrease the setting. For most applications, adjust the angle to its functional minimum position.

Switch Point Adjustment Slot

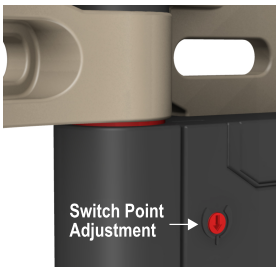

Relocating the Switch Point Setting or Repositioning the Hinge

The switch point setting can be changed (to mount the switch in a new location, for example). Changing the setting requires replacing the red plastic washer. See "SI-HG63 Replacement Accessory Kit" on page 22 for a kit that includes a replacement washer.

The hinge must be removed from the switch component to change the earlier switch point setting. The hinge may then be reinstalled on the same side of the switch as before, or it may be installed to the opposite side (a left-hand hinge may be converted to a right-hand hinge, and vice versa).

To perform either task:

1. Remove the screws fastening the hinge to the switch using the supplied tool. Retain the screws for later reuse.

Remove the screws

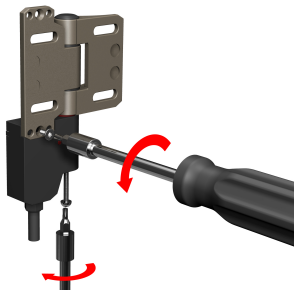

2. Insert a flat-blade screwdriver between the hinge housing and the plastic plug to gently pry the plastic plugs out. Retain the plastic plugs for later reuse.

Remove the plugs

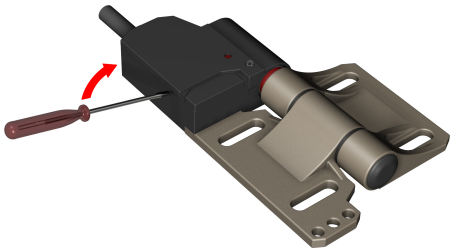

3. Remove the hinge portion from the switch.

Remove the hinge

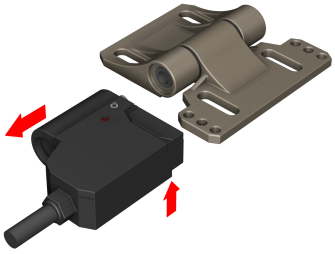

4. Lift the red plastic washer from the switch. Discard the plastic washer; it cannot be reused.

© Banner Engineering Corp. All rights reserved.

Remove the plastic washer



5. Align the switch cylinder arrow with mark “A” on the switch housing.

NOTE: An SW8 hex wrench is recommended for easy rotation.

Algin to "A"



6. Gently press and turn the switch element into the enclosure until the switch cylinder arrow aligns with mark “B” on the switch housing. The switch element should sink into the enclosure during this process.

Align to "B"



7. Press the switch element into the enclosure again until it reaches the internal stop. The notch of the white insert should be seated around the protrusion of the switch enclosure.

Insert seated around the protrusion

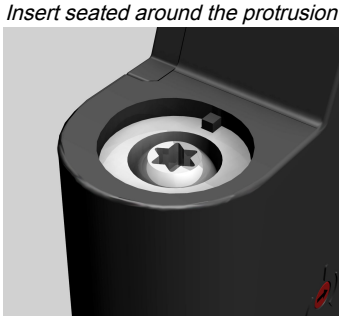

8. Install a new red plastic washer (from the accessories bag included with the switch) onto the switch cylinder.

© Banner Engineering Corp. All rights reserved.

Install a new plastic washer



9. If the hinge position on the switch is being changed (changing from a left hinge to a right, for example), remove the rectangular plug from the switch housing and attach the hinge to that side. Install the hinge onto the switch and rotate 30° to seat. Fasten the switch to the hinge using the supplied tool and the screws removed in step 1. The countersunk screw max. torque is 2 Nm.

Change the hinge position

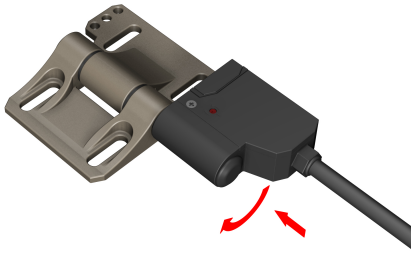

10. Set the new switch point setting as required.

© Banner Engineering Corp. All rights reserved.

Chapter Contents

Connection to a Machine 13
Monitoring Series-Connected Safety Switches 14

Chapter 5 Electrical Installation

WARNING:

- **Risk of electric shock**
- Use extreme caution to avoid electrical shock. Serious injury or death could result.
- Always disconnect power from the safety system (for example, device, module, interfacing, etc.), guarded machine, and/or the machine being controlled before making any connections or replacing any component. Lockout/tagout procedures might be required. Refer to OSHA 29CFR1910.147, ANSI Z244-1, or the applicable standard for controlling hazardous energy.
- Make no more connections to the device or system than are described in this manual. Electrical installation and wiring must be made by a Qualified Person[1] and must comply with the applicable electrical standards and wiring codes, such as the NEC (National Electrical Code), NFPA 79, or IEC 60204-1, and all applicable local standards and codes.

Connection to a Machine

Electrical connection is via a 6-pin dual-key M12/micro-style QD and cordsets (see "Cordsets" on page 21) or via the integral cable of the IP69 models.

Perform a risk assessment to determine the appropriate level of safety circuit performance (integrity) and the means of interfacing the switch(es) with the machine control circuit. While Banner Engineering always recommends the highest level of safety in any application, the user is responsible to safely install, operate, and maintain each safety system and comply with all relevant laws and regulations.

To ensure the highest level of reliability (Control Reliable or Category 4, for example), wire the positively-driven safety contacts (safety contacts that are closed when the actuator is engaged) **from each of two individual safety switches per interlock guard** in a dual channel hookup to a safety module (for example, ES-FA-9AA), safety controller (for example, SC/XS26-2), or the safety-related part of the machine control that complies with the required level of safety performance.

Connect two redundant safety switches per interlock guard to an appropriate 2-channel input safety module

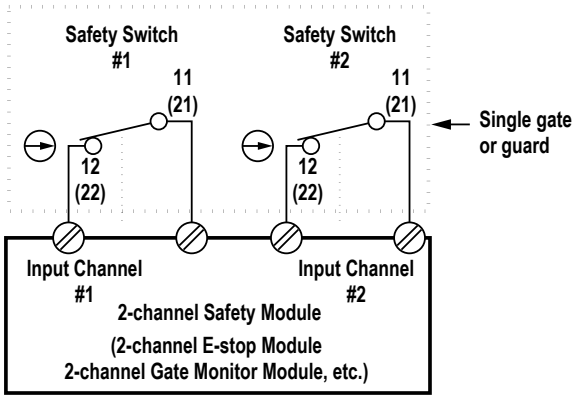

The non-safety contact (33/34) will switch at a greater degree (rotation) than the safety contacts and may not indicate if the guard is slightly open (see "Figure: Switching Diagram" on page 4). In such situations, an unused safety contact can more accurately indicate the status of the guard.

[1] A person who, by possession of a recognized degree or certificate of professional training, or who, by extensive knowledge, training and experience, has successfully demonstrated the ability to solve problems relating to the subject matter and work.

© Banner Engineering Corp. All rights reserved.

Refer to the installation instructions provided with the safety module or safety controller for information regarding the interface of the safety module to the machine stop control elements.

Two functions of the safety module or safety controller are:

1. To provide a means of monitoring the contacts of both safety switches for contact failure, and to prevent the machine from restarting if either switch fails.
2. To provide a reset routine after closing the guard and returning the safety contacts to their closed position. This prevents the controlled machinery from restarting by simply closing the guard (reinserting the key/actuator, for example). This necessary reset function is required by ANSI B11.0 and NFPA 79 machine safety standards.

Use only positively-driven, normally-closed safety contacts from each switch for connection to the safety module, controller, or the safety related part of the machine control (see "Figure: Switching Diagram" on page 4). A typical use for the normally-open non-safety contact is to communicate status with a process controller or for other control functions that are not safety-related. Refer to the installation instructions provided with the safety modules or controllers for more information regarding the interface of the safety module to the machine stop control elements.

WARNING:

- **Determine the safety category**
- The design and installation of the safety devices and the means of interfacing of those devices could greatly affect the level of safety circuit integrity.
- Perform a risk assessment to determine the appropriate safety circuit integrity level or safety category, as described by ISO 13849-1, to ensure that the expected risk reduction is achieved and that all applicable regulations and standards are met.

IMPORTANT: The design, installation, and the means of interfacing of the safety switches greatly affect the level of safety circuit integrity. It is recommended that two individual safety switches be used to monitor each guard and that the normally-closed safety contacts from each of the two safety switches be connected in a dual channel method to a safety module or safety controller to achieve control reliability (OSHA 29CFR1910 or ANSI B11.19) or Category 3 or 4 (ISO 13849-1). This is required to provide monitoring for safety switch failure, and to provide the necessary reset routine, as required by NFPA 79 and IEC 60204-1. **Use of only one safety switch per interlock guard is not recommended in situations that can result in serious injury or death.**

Monitoring Series-Connected Safety Switches

When monitoring the position of several guards with a single safety module or controller, the contacts of the corresponding pole of each switch must be connected together in series. Never connect the contacts of multiple switches in parallel. Such a parallel connection can defeat the switch contact monitoring ability of the module and could create an unsafe condition.

When multiple safety switches are series connected, the failure of one switch in the system may be masked or not be detected at all. The following two scenarios assume two positive-opening safety switches on each guard, both connected in series to switches of a second guard (dual channel hookup) and monitored by a safety module or safety controller:

- **Masking of a failure**—If a guard is opened but one switch fails to open, the redundant safety switch on that guard opens and a protective (safety) stop occurs. If the faulty guard is then closed, the module/controller will not reset because one channel did not open, thus complying with the required fault detection. However, if a second "good" guard is cycled (opening and then closing both of the channels), the failure appears to be corrected (input requirements satisfied) and the module/controller allows a reset. This system is no longer redundant and, if the second switch fails, may result in an unsafe condition (the accumulation of faults resulting in loss of the safety function).
- **Non-detection of a failure**—If a functional guard is opened, both channels open and the module/controller initiates a protective (safety) stop. If a guard with a faulty safety switch is then opened and closed before the good guard is re-closed, the faulty switch is not detected. The system is no longer redundant and may result in a loss of safety if the redundant switch fails to open when needed.

The system in either scenario does not inherently comply with the safety standard requirements of detecting a single fault and preventing the next cycle (not a Category 4 application per ISO 13849-1). In multiple-guard systems using series-connected safety switches, it is important to periodically check the functional integrity of each interlocked guard individually. Open and close each guard separately while verifying that the machine properly responds. **Operators, maintenance**

© Banner Engineering Corp. All rights reserved.

personnel, and others associated with the operation of the machine must be trained to recognize failures and be instructed to correct them immediately.



WARNING:

- **Connecting safety switches in series**
- Monitoring multiple guards with a series connection of multiple safety interlock switches is not a Safety Category 4 Application (per ISO 13849-1). A single failure can be masked or not detected at all. The loss of a safety stop signal or an inappropriate reset can lead to serious injury or death.
- When such a configuration is used, procedures must be performed regularly to verify proper operation of each switch. Correct all failures immediately (for example, immediately replace a failed switch).

© Banner Engineering Corp. All rights reserved.

Chapter Contents

SI-HG63 Dimensions 17

Chapter 6 SI-HG(Z)63 Specifications

Contact Rating

3 A at 230 V AC max., 1.0 A at 24 V DC max.

2.5 kV maximum rated impulse withstand voltage (U_{imp})

European Rating:

U_i = 250 V

U_e = 230 V AC, 24 V DC

Ithe = 4A

Utilization categories: AC-15: U_e/I_e 230 V / 3 A; DC-13: U_e/I_e 24 V / 1 A (IEC/EN 90497-5-1)

Electrical Protection Class

II, protective insulation

Contact Function

Slow make and break contacts, 2 NC, 1 NO

Wire Connections

6-pin Micro-style quick-disconnect fitting (M12 Dual-Key-Way). Cordsets are ordered separately.

Construction

SI-HG63..: Hinge: Cast Stainless Steel (X22CrNi 17); Switch: PBT

SI-HGZ63..: Hinge: zinc die cast (nickel finish); Switch: PBT

Environmental Rating

IP67 acc. to IEC/EN 60529

W models are IEC IP69 according to IEC/EN 60529

Operating Conditions

–25 °C to +70 °C (–13 °F to +158 °F) (connecting cable permanently mounted; no freezing over / no condensation)

Mounting

4 × M6 screws DIN EN ISO 7984 (on flat and stiff surface)

Switching Frequency

Max. 300 operations/h (5 operations per minute)

Switching Angle

NC Contact: ± 3°, Positive-opening ± 6° (wear can cause increase by 2°)

NO Contact: ± 9°

Tolerance for all angles: 1.5°

Mechanical Load

SI-HG63..: F_{R1} = 1800 N max., F_{R2} = 750 N max., F_A = 1800 N max.

SI-HGZ63..: F_{R1} = 1200 N max., F_{R2} = 500 N max., F_A = 1200 N max.

For direction of loaded forces, see Operating Range

Certifications

Banner Engineering BV
Park Lane, Culliganlaan 2F bus 3
1831 Diegem, BELGIUM

Mechanical Life

1 million operations

Excessive loading (force) and/or vibration, as well as improper installation, can reduce the service life.

Weight

SI-HG63..: approximately 0.45 kg

SI-HG63A: approximately 0.27 kg

SI-HGZ63..: approximately 0.4 kg

SI-HGZ63A: approximately 0.22 kg

Cabled **SI-HG63..:** approximately 0.65 kg

Double **SI-HG63..:** approximately 1 kg

Application Notes

To avoid excessive radial stress in applications containing large doors, the hinge switch must be mounted either in pairs of two, or in conjunction with a blank hinge.

Applicable Standards

VDE 0660 T100, DIN EN 60947-1, IEC 60947-1

VDE 0660 T200, DIN EN 60947-5-1, IEC 60947-5-1

B10d

2×10^6 cycles (at DC-13; 24 V; I_{e2} = 0.1 A)

Short Circuit Protection

4 amp Slow Blow (gG). Recommended external fusing or overload protection.

Rated conditional short-circuit current: 1000 A

Operating Range

0 to 270 deg

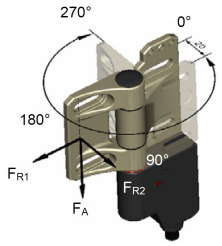

EU-Conformity

According to directive 2006/42/EG

According to directive 2006/95/EC

Approvals

$_C$CSA$_{US}$ B300

Turck Banner LTD Blenheim House
Blenheim Court
Wickford, Essex SS11 8YT
GREAT BRITAIN

© Banner Engineering Corp. All rights reserved.

SI-HG63 Dimensions

All measurements are listed in millimeters [inches], unless noted otherwise.

For blank hinge dimensions, see "SI-HG63 Blank Hinge" on page 22.

Model SI-HG(Z)63FQDR [1]

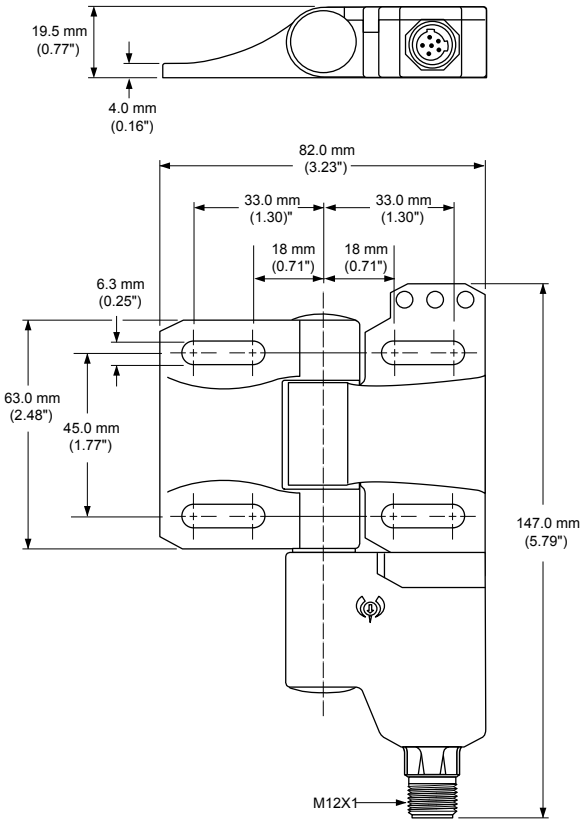

[1] *Dimensions for model SI-HG(Z)63FQDL are a mirror image.*

© Banner Engineering Corp. All rights reserved.

Model SI-HG(Z)63FQDRR

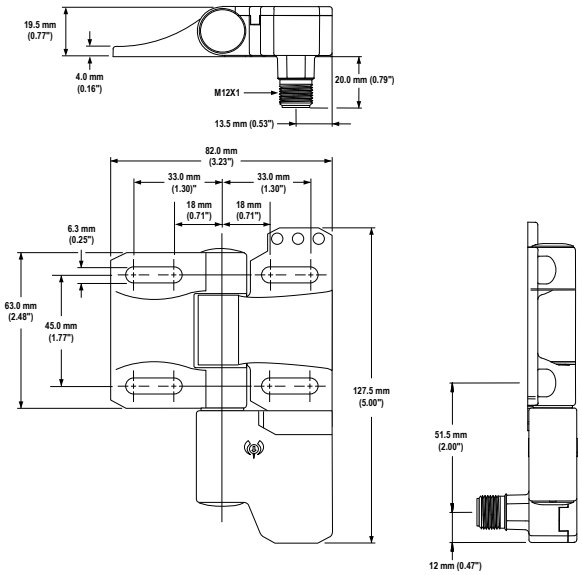

Model SI-HG63F5MB

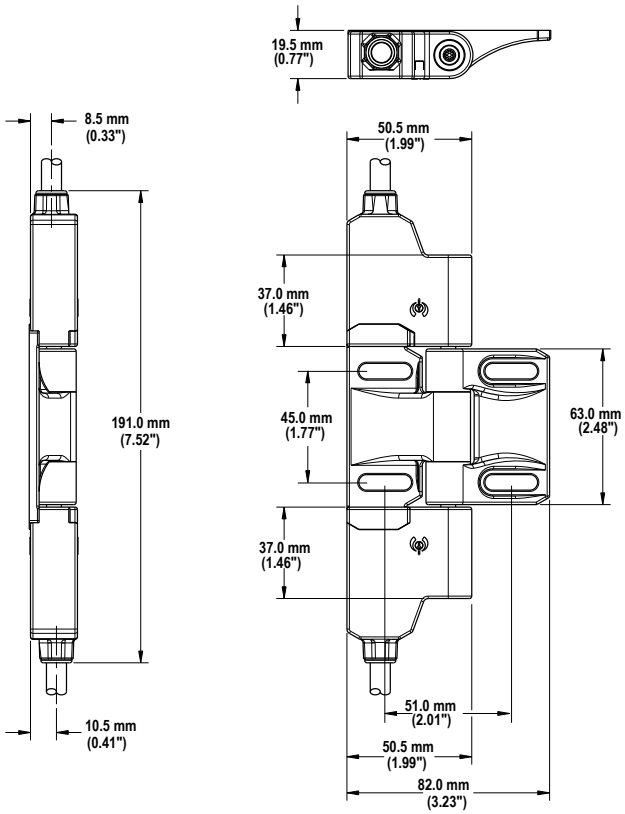

© Banner Engineering Corp. All rights reserved.

Model SI-HG63F5MR

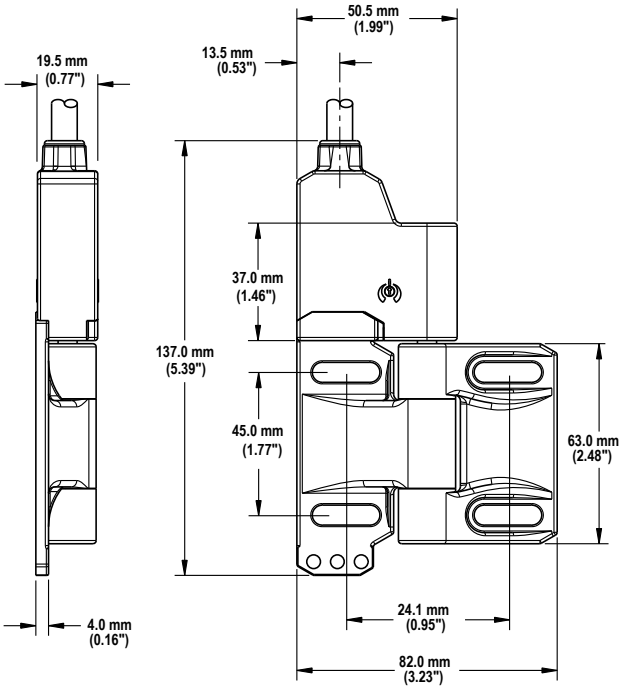

Model SI-HG63F5MRR

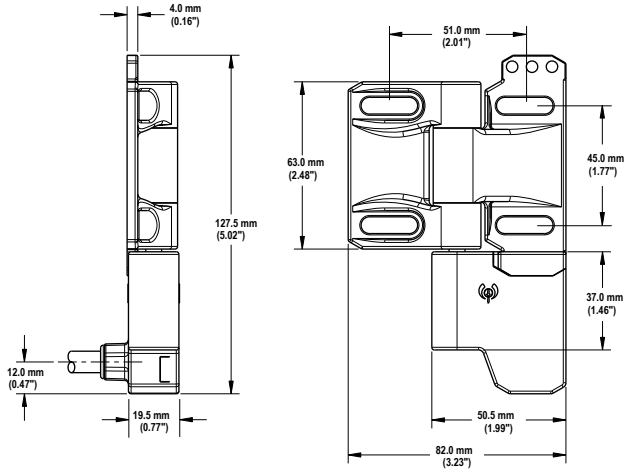

© Banner Engineering Corp. All rights reserved.

Chapter Contents

Chapter 7 Guard Opening Calculation (before switching)

The size opening between the machine frame and the guard can be estimated based on the table provided. This can assist in determining safety distance as described by ANSI B11.19 or ISO 13857.

Example: A guard with a 40 mm aluminum profile (A) and a width of 900 mm (B) is safeguarded by SI-HG(Z)63 safety interlocking switch. The switching point is set (fixed) while the guard is closed, the positive-opening switching point is set at α = 6° in the opening direction (assuming that the point has not been finely adjusted).

In the table, find the "B" row of "900" and then follow over to the 6° column and note the number (94.1 mm). The approximate opening in the guard at the switching point (C1) can be found by subtracting the width of the guard.

C1 = C – A = 94.1 mm – 40 mm = 54.1 mm (at initial installation).

where:

α = Opening angle of the guard at the point of switching
A = Width of the guard in mm
B = Length of the guard in mm
C = Distance travel by outside of guard
C1 = Size of the opening in the guard at the point of switching

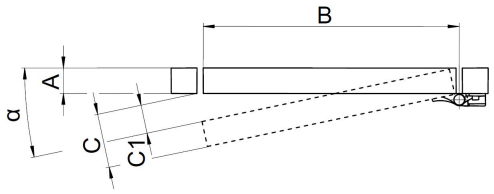

α	3°	4°	5°	6° ⊕	7°	8°	9°
B mm	**C mm**						
100	5.2	7.0	8.7	10.5	12.2	13.9	15.6
200	10.5	14.0	17.4	20.9	24.4	27.8	31.3
300	15.7	20.9	26.1	31.4	36.6	41.8	46.9
400	20.9	27.9	34.9	41.8	48.7	55.7	62.6
500	26.2	34.9	43.6	52.3	60.9	69.6	78.2
600	31.4	41.9	52.3	62.7	73.1	83.5	93.9
700	36.6	48.8	61.0	73.2	85.3	97.4	109.5
800	41.9	55.8	69.7	83.6	97.5	111.3	125.1
900	47.1	62.8	78.4	94.1	109.7	125.3	140.8
1000	52.3	69.8	87.2	104.5	121.9	139.2	156.4
1100	57.6	76.7	95.9	115.0	134.1	153.1	172.1
1200	62.8	83.7	104.6	125.4	146.2	167.0	187.7
1300	68.0	90.7	113.3	135.9	158.4	180.9	203.4
1400	73.3	97.7	122.0	146.3	170.6	194.8	219.0
1500	78.5	104.6	130.7	156.8	182.8	208.8	234.7

© Banner Engineering Corp. All rights reserved.

Chapter Contents

Safety Monitoring Devices 21
Cordsets 21
SI-HG63 Blank Hinge 22
SI-HG63 Replacement Accessory Kit 22

Chapter 8 Accessories

Safety Monitoring Devices

The Safety Interlock Switches are contact-based devices. To perform their safety function, these switches need to be connected to an appropriate safety monitoring device like an ES-FA-xAA, SC10, SC26, or XS26.

Safety controller models

Non-Expandable Models	Expandable Models	Description
SC26-2	**XS26-2**	26 convertible I/O and 2 redundant solid-state safety outputs
SC26-2d	**XS26-2d**	26 convertible I/O and 2 redundant solid-state safety outputs with display
SC26-2e	**XS26-2e**	26 convertible I/O and 2 redundant solid-state safety outputs with Ethernet
SC26-2de	**XS26-2de**	26 convertible I/O and 2 redundant solid-state safety outputs with display and Ethernet
SC10-2roe		10 inputs, 2 redundant relay safety outputs (3 contacts each) (ISD and Ethernet compatible)
	XS26-ISDd	26 inputs, 2 redundant solid-state safety outputs with display, Ethernet, and 8 ISD channels

Single or dual channel switch monitoring:

Model	Description
UM-FA-9A	3 Normally Open (NO) Redundant-output 6 A Contacts
UM-FA-11A	2 Normally Open (NO) Redundant-output 7 A Contacts, plus 1 Normally Closed (NC) Auxiliary Contact
ES-FA-9AA	3 Normally Open (NO) Redundant-output 6 A Contacts
ES-FA-11AA	2 Normally Open (NO) Redundant-output 7 A Contacts, plus 1 Normally Closed (NC) Auxiliary Contact

Cordsets

6-Pin M12 Dual Key Cordsets—Single Ended				
Model	**Length**	**Style**	**Dimensions**	**Pinout (Female)**
MQEAC-606	2 m (6.56 ft)	Straight	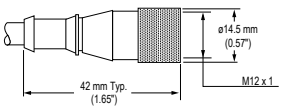	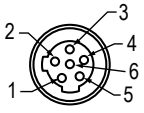 1 = Red/White 2 = Red 3 = Green 4 = Red/Yellow 5 = Red/Black 6 = Red/Blue
MQEAC-615	5 m (16.40 ft)			
MQEAC-630	9.14 m (30 ft)			
MQEAC-606RA	1.83 m (6 ft)	Right-angle	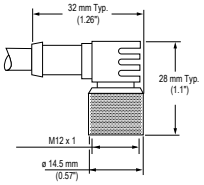	
MQEAC-615RA	4.57 m (15 ft)			
MQEAC-630RA	9.14 m (30 ft)			

© Banner Engineering Corp. All rights reserved.

Additional Pinout Information for SI-HG(Z)63 Hinge Wing Safety Interlock Switch					
Pin	Contact	Wire Color	Pin	Contact	Wire Color
1	11	Red/White (rd/wh)	2	12	Red (rd)
3	21	Green (gr)	4	22	Red/Yellow (rd/ye)
5	33	Red/Black (rd/bk)	6	34	Red/Blue (rd/bu)

SI-HG63 Blank Hinge

Model	Construction	Description	Dimensions
SI-HG63A	Stainless Steel	Blank hinge; same mechanical specifications as SI-HG(Z)63 Series hinge switches, but without the safety switch component	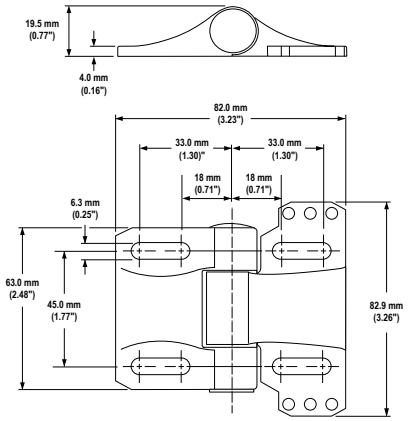
SI-HGZ63A	Zinc Die-cast		

SI-HG63 Replacement Accessory Kit

Model	Kit Includes
SI-HG63-TK1	2 plugs 1 plastic washer 1 bit 1 screwdriver 1 installation instructions
SI-HG63-setscrew-5	5 replacement setscrews

© Banner Engineering Corp. All rights reserved.

Chapter Contents

Checkout 23
Repairs 23
Standards and Regulations 23
EU/UK Declaration of Conformity (DoC) 24
Banner Engineering Corp Limited Warranty 24

Chapter 9 Product Support and Maintenance

Checkout

At switch installation or replacement and at machine set up, a *Designated Person*[1] must test each switch for proper machine shutdown response and check the switch(es) and installation for proper operation, physical damage, mounting (looseness), and excessive environmental contamination. This must also take place on a periodic schedule determined by the user, based on the severity of the operating environment and the frequency of switch actuations. Adjust, repair, or replace components as needed. If inspection reveals contamination on the switch, thoroughly clean the switch and eliminate the cause of the contamination. Replace the switch and/or appropriate components when any parts or assemblies are damaged, broken, deformed, or badly worn; or if the electrical/mechanical specifications (for the environment and operating conditions) have been exceeded. **Always test the control system for proper functioning** under machine control conditions after performing maintenance, replacing the switch, or replacing any component of the switch.

Repairs

Do not attempt any repairs to the safety interlocking switch. It contains no field-replaceable components. Return it to Banner Engineering for warranty repair or replacement.

Contact Banner Factory Application Engineering. They will attempt to troubleshoot the system from your description of the problem. If they conclude that a component is defective, they will issue a return merchandise authorization (RMA) number for your paperwork, and give you the proper shipping address.

> **IMPORTANT:** Pack the safety switches carefully. **Damage that occurs in return shipping is not covered by warranty.**

Standards and Regulations

The list of standards below is included as a convenience for users of this Banner device. Inclusion of the standards below does not imply that the device complies specifically with any standard, other than those specified in the Specifications section of this manual.

US Application Standards

ANSI B11.0 Safety of Machinery

ANSI B11.19 Performance Requirements for Risk Reduction Measures: Safeguarding and Other Means of Reducing Risk

NFPA 79 Electrical Standard for Industrial Machinery

International/European Standards

ISO 12100 Safety of Machinery – General Principles for Design – Risk Assessment and Risk Reduction

ISO 14119 (EN 1088) Interlocking Devices Associated with Guards – Principles for Design and Selection

ISO 14120 Safety of machinery – Guards – General requirements for the design and construction of fixed and movable guards

ISO 13857 Safety of Machinery – Safety Distances to Prevent Hazard Zones Being Reached

---

[1] A *Designated Person* is identified in writing by the employer as being appropriately trained to perform a specified checkout procedure.

© Banner Engineering Corp. All rights reserved.

IEC 62061 Safety of Machinery – Functional Safety of Safety-Related Control Systems

ISO 13849-1 Safety of Machinery – Safety-Related Parts of Control Systems – Part 1: General Principles for Design

EN 60204-1 Electrical Equipment of Machines Part 1: General Requirements

IEC 60947-1 Low Voltage Switchgear – General Rules

IEC 60947-5-1 Low Voltage Switchgear – Electromechanical Control Circuit Devices

IEC 60529 Degrees of Protection Provided by Enclosures

IEC 61508 Functional Safety of Electrical/Electronic/Programmable Electronic Safety-Related Systems

EU/UK Declaration of Conformity (DoC)

Banner Engineering Corp. herewith declares that these products are in conformity with the provisions of the listed directives and all essential health and safety requirements have been met. For the complete DoC, please go to www.bannerengineering.com.

Product	Directive
SI-HG(Z)63 Hinge Wing Safety Interlock Switch	EU: Machinery Directive 2006/42/EC
	UKCA: Machinery (Safety) Regulation 2008

Representative in EU: Spiros Lachandidis, Managing Director, **Banner Engineering BV** Park Lane | Culliganlaan 2F bus 3 | 1831 Diegem, BELGIUM

Representative in UK: Tony Coghlan, Managing Director, **Turck Banner LTD** Blenheim House | Blenheim Court | Wickford, Essex SS11 8YT | Great Britain

Banner Engineering Corp Limited Warranty

Banner Engineering Corp. warrants its products to be free from defects in material and workmanship for one year following the date of shipment. Banner Engineering Corp. will repair or replace, free of charge, any product of its manufacture which, at the time it is returned to the factory, is found to have been defective during the warranty period. This warranty does not cover damage or liability for misuse, abuse, or the improper application or installation of the Banner product.

THIS LIMITED WARRANTY IS EXCLUSIVE AND IN LIEU OF ALL OTHER WARRANTIES WHETHER EXPRESS OR IMPLIED (INCLUDING, WITHOUT LIMITATION, ANY WARRANTY OF MERCHANTABILITY OR FITNESS FOR A PARTICULAR PURPOSE), AND WHETHER ARISING UNDER COURSE OF PERFORMANCE, COURSE OF DEALING OR TRADE USAGE.

This Warranty is exclusive and limited to repair or, at the discretion of Banner Engineering Corp., replacement. **IN NO EVENT SHALL BANNER ENGINEERING CORP. BE LIABLE TO BUYER OR ANY OTHER PERSON OR ENTITY FOR ANY EXTRA COSTS, EXPENSES, LOSSES, LOSS OF PROFITS, OR ANY INCIDENTAL, CONSEQUENTIAL OR SPECIAL DAMAGES RESULTING FROM ANY PRODUCT DEFECT OR FROM THE USE OR INABILITY TO USE THE PRODUCT, WHETHER ARISING IN CONTRACT OR WARRANTY, STATUTE, TORT, STRICT LIABILITY, NEGLIGENCE, OR OTHERWISE.**

Banner Engineering Corp. reserves the right to change, modify or improve the design of the product without assuming any obligations or liabilities relating to any product previously manufactured by Banner Engineering Corp. Any misuse, abuse, or improper application or installation of this product or use of the product for personal protection applications when the product is identified as not intended for such purposes will void the product warranty. Any modifications to this product without prior express approval by Banner Engineering Corp will void the product warranties. All specifications published in this document are subject to change; Banner reserves the right to modify product specifications or update documentation at any time. Specifications and product information in English supersede that which is provided in any other language. For the most recent version of any documentation, refer to: www.bannerengineering.com.

For patent information, see www.bannerengineering.com/patents.

Document title: SI-HG(Z)63 Hinge Wing Safety Interlock Instruction Manual
Part number: 129465
Revision: I
Original Instructions
© Banner Engineering Corp. All rights reserved.

129465

© Banner Engineering Corp. All rights reserved.

LinkedIn

Twitter

Facebook



© 2024. All rights reserved.
www.bannerengineering.com