U-GAGE® QT50ULB Series Sensors with Analog Output

Datasheet

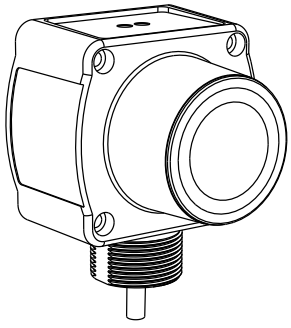

Long-range ultrasonic sensors with TEACH-mode programming

- Fast, easy-to-use TEACH-Mode programming; no potentiometer adjustments
- Scalable output automatically distributes the output signal over the width of the programmed sensing window
- Minimum and Maximum window limits can be adjusted independently
- Selectable 0 to 10 V dc or 4 to 20 mA output, selected via DIP switch
- Access to bank of 8 DIP switches through sealed cover for superior user functionality
- Rugged encapsulated design for harsh environments
- Unique housing design allows for multiple mounting configurations
- Choose models with integral unterminated 2 m (6.5 ft) or 9 m (30 ft) cable, or with Mini-style or M12/Euro-style quick-disconnect connection
- Wide operating range of –20 °C to +70 °C (–4 °F to +158 °F)
- Temperature compensation
- Programmable for either positive or negative output slope

Models [1]	Sensing Range	Cable [2]	Supply Voltage	Output
QT50ULB	200 mm to 8 m (8 inches to 26 feet)	5-wire, 2 m (6.5 ft) cable	10 to 30 V dc	Selectable: 0 to 10 V dc or 4 to 20 mA
QT50ULBQ		5-pin Mini-style QD		
QT50ULBQ6		5-pin Euro-style QD		

WARNING: Not To Be Used for Personnel **Protection**

Never use this device as a sensing device for personnel **protection.** Doing so could lead to serious injury or death. This device does not include the self-checking redundant circuitry necessary to allow its use in personnel safety applications. A sensor failure or malfunction can cause either an energized or de-energized sensor output condition.

Principles of **Operation**

Ultrasonic sensors emit one or multiple pulses of ultrasonic energy, which travel through the air at the speed of sound. A portion of this energy reflects off the target and travels back to the sensor. The sensor measures the total time required for the energy to reach the target and return to the sensor. The distance to the object is then calculated using the following formula: D = ct ÷ 2

D = distance from the sensor to the target
c = speed of sound in air
t = transit time for the ultrasonic pulse

To improve accuracy, an ultrasonic sensor may average the results of several pulses before outputting a new value.

Temperature **Effects**

The speed of sound is dependent upon the composition, pressure and temperature of the gas in which it is traveling. For most ultrasonic applications, the composition and pressure of the gas are relatively fixed, while the temperature may fluctuate.

In air, the speed of sound varies with temperature according to the following approximation:

In metric units: $C_{m/s} = 20\sqrt{273 + T_C}$

$C_{m/s}$ = speed of sound in meters per second

T_C = temperature in °C

In English units: $C_{ft/s} = 49\sqrt{460 + T_F}$

$C_{ft/s}$ = speed of sound in feet per second

T_F = temperature in °F

1 Information about discrete-output models is available on Banner's website: *www.bannerengineering.com*.
2 To order the 9 m cable models, add the suffix "w/30" to the model number of a cabled sensor (e.g., QT50ULB w/30). Models with a QD connector require a mating cable.

Original Document
70137 Rev. C

27 July 2017

70137

ПРОМЭЛЕКТРОНИКА/ sales@prom-elec.com

In metric units: $C_{m/s} = 20 \sqrt{273 + T_C}$

$C_{m/s}$ = speed of sound in meters per second

T_C = temperature in °C

In English units: $C_{ft/s} = 49 \sqrt{460 + T_F}$

$C_{ft/s}$ = speed of sound in feet per second

T_F = temperature in °F

The speed of sound changes roughly 1% per 6° C (10° F). QT50U series ultrasonic sensors have temperature compensation available, via the 8-pin DIP switch. Temperature compensation will reduce the error due to temperature by about 90%.

Note: If the sensor is measuring across a temperature gradient, the compensation will be less effective.

Analog Output Slope

The U-GAGE QT50ULB Sensor may be programmed for either a positive or a negative output slope, depending on which conditions are taught for the Min and Max Analog limits. If the Min Analog limit is the Near Window setting and the Max Analog limit is the Far Window setting, then the slope will be positive. If the opposite is true, then the slope will be negative.

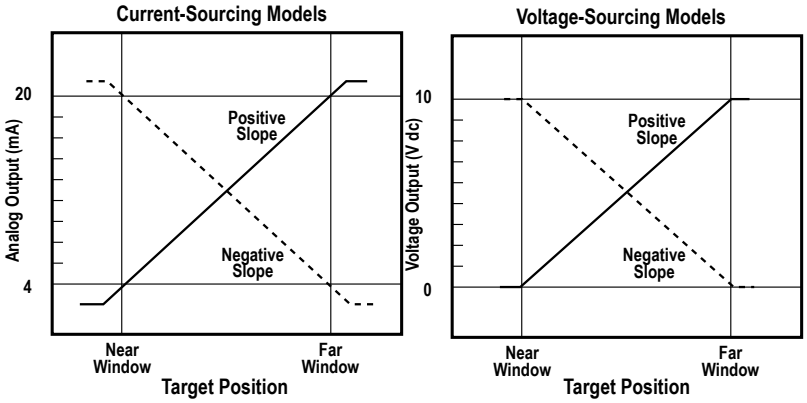

Figure 1. Positive and Negative Output Slops

Configuration

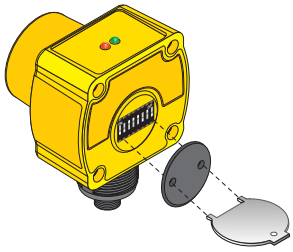

Figure 2. Removing the Access Cover

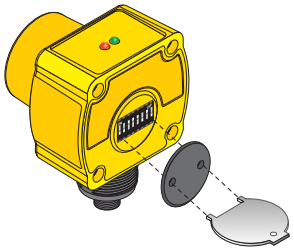

Figure 3. DIP Switch Location

The U-GAGE QT50ULB Sensor features an 8-pin DIP switch bank for user setup. The DIP switches are located behind the access cover on the back of the sensor as shown. A spanner tool is included with each sensor for removing the cover.

Switch	Function	Settings
1	Voltage/Current Mode	ON = Current mode: 4 to 20 mA
		OFF* = Voltage mode: 0 to 10 V dc
2	Loss of Echo	ON* = Min-Max Mode
		OFF = Hold Mode
3	Min-Max	ON = Default to maximum output value on loss of echo
		OFF* = Default to minimum output value on loss of echo
4	Teach/Enable Control	ON* = Configured for remote teach
		OFF = Configured for enable

Switch	**Function**	**Settings**	
5 and 6	Analog Voltage Output Response for 95% of Step Change	Switch 5	Switch 6
	100 ms with 100 ms update	OFF	OFF
	500 ms with 100 ms update*	ON*	OFF*
	1100 ms with 100 ms update	OFF	ON
	2300 ms with 100 ms update	ON	ON
7	Temperature Compensation	ON* = Enabled	
		OFF = Disabled	
8	Factory Calibration	ON = For factory calibration only; switch should be set to OFF for use	
		OFF* = DIP-switch settings in control	

* Factory default setting

DIP Switch Selectable **Functions**

CAUTION: To avoid damage to the sensor caused by static discharge (ESD), observe proper ESD precautions (grounding) while adjusting the DIP switches.

Switch 1: Output Mode Select
ON = 4 to 20 mA current output is enabled
OFF = 0 to 10 V dc voltage output is enabled

Switch 1 configures the sensor internally to use either the current output or voltage output configuration.

Switch 2: Loss of Echo Mode Select
ON = Min-Max Mode
OFF = Hold Mode

Switch 2 determines the output response to the loss of echo. “Min-Max Mode” (Switch 2 ON) drives the output to either the minimum value or the maximum value when the echo is lost. (Minimum or Maximum value is selected via Switch 3.)

“Hold Mode” (Switch 2 OFF) maintains the output at the value which was present at the time of echo loss.

Switch 3: Min-Max Default
ON = Default to maximum output value at loss of echo (10.5 V dc or 20.8 mA)
OFF = Default to minimum output value at loss of echo (0 V dc or 3.6 mA)

Switch 3 selects the output response to loss of echo when “Min-Max Mode” is selected via Switch 2. When Switch 2 is OFF, Switch 3 has no function.

Switch 4: Teach/Transmit Enable Control
ON = Gray (or yellow) wire configured for remote teach
OFF = Gray (or yellow) wire configured for transmit enable/disable: High (5 to 30 V dc) - Transmit Enabled (Power LED solid Green); Low (0 to 2 V dc) - Transmit Disabled (Power LED flashes at 2 Hz)

When Switch 4 is ON, the gray wire is used to teach window limits to the sensors.

When Switch 4 is OFF, the gray wire is used to enable and disable the sensor’s transmit burst. The sensor output will react as if a “loss of echo” occurred and either hold the output or change to minimum or maximum value (depending on switch 2 and 3 settings). This function may be used when multiple sensors are in close proximity, which may make them vulnerable to crosstalk interference. A PLC can be used to enable the sensors one at a time to avoid crosstalk.

Switches 5 and 6: Response Speed Adjustment

Switches 5 and 6 are used to set the speed of the output response. The four values for response speed relate to the number of sensing cycles over which the output value is averaged.

Switch 7: Temperature **Compensation**
ON = Temperature compensation enabled
OFF = Temperature compensation disabled

Changes in air temperature affect the speed of sound, which in turn affects the distance reading measured by the sensor. An increase in air temperature shifts both sensing window limits closer to the sensor. Conversely, a decrease in air temperature shifts both limits farther away from the sensor. This shift is approximately 3.5% of the limit distance for a 20 °C change in temperature. With temperature compensation enabled (Switch 7 ON), the sensor will maintain the window limits to within 1.8 percent over the –20 °C to 70 °C range.

The temperature sensor in the sensor’s bezel cannot adapt to temperature change as quickly as an external temperature device can. When there are fast fluctuations in temperature, it may be best to use an external temperature monitor and feed its signal and the uncompensated distance measurement into a controller and perform the compensation calculations within the controller.

Consult the factory for details on performing temperature compensation calculations.

- If temperature compensation is enabled, exposure to direct sunlight can affect the sensor's ability to accurately compensate for changes in temperature.
- With temperature compensation enabled, the temperature warmup drift upon power-up is less than 0.8% of the sensing distance. After 15 minutes, the apparent distance will be within 0.5% of the actual distance. After 30 minutes, the apparent distance will be within 0.3% of the actual distance.

Switch 8: Factory **Calibration**

ON = Factory calibration only

OFF = Normal operation

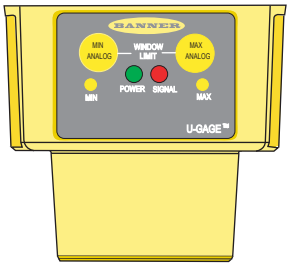

MIN - Minimum limit indicator
MAX - Maximum limit indicator
POWER - Sensor power indicator
SIGNAL - Target signal strength indicator

Figure 4. Sensor Features

General Notes on Programming

- The sensor returns to RUN mode if the limit is not registered within 120 seconds after entering TEACH Mode.
- Press and hold the programming push button for more than 2 seconds (before teaching the limit) to exit PROGRAM mode without saving any changes. The sensor will revert to the last saved program.
- If the push buttons do not respond, perform a remote lockout procedure to enable push buttons.

Sensor Programming

Two TEACH methods may be used to program the sensor:

- Teach individual minimum and maximum limits
- Use the Auto-Window feature to center a sensing window around the taught position

The sensor may be programmed either via its two push buttons, or via a remote switch. Remote programming also may be used to disable the push buttons, preventing unauthorized personnel from adjusting the programming settings. To access this feature, connect the gray wire of the sensor to 0–2 V dc, with a remote programming switch between the sensor and the voltage.

Note: The impedance of the Remote Teach input is 12 kΩ.

Programming is accomplished by following the sequence of input pulses. The duration of each pulse (corresponding to a push button "click"), and the period between multiple pulses, are defined as "T" where 0.04 seconds < T < 0.8 seconds.

Teaching Minimum and Maximum Limits

The Min and Max Analog limits are independent. To readjust either limit, it is necessary to follow the teach procedure for that limit only.

Setting the Minimum Analog Limit

	Push **Button** Method	
Step	**Action**	Result
1	Push and hold the Min Analog button	Min Analog LED turns ON red; sensor is waiting for 0 V dc or 4 mA limit.
2	Position the target for the Min Analog limit	Sensor learns Min limit
3	"Click" the Min Analog button	Min LED changes from red to amber or flashing amber

	Remote Line Method (0.04 s < T < 0.8 s)	
Step	**Action**	Result
1	Position the target for the Min Analog limit	Sensor learns the 0 V dc or 4 mA limit
2	Single-pulse the remote line 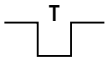	Min Analog LED flashes red once

Setting the Maximum Analog Limit

	Push **Button** Method	
Step	**Action**	Result
1	Push and hold the Max Analog button	Max Analog LED turns ON red; sensor is waiting for 10 V dc or 20 mA limit.
2	Position the target for the Max Analog limit	Sensor learns Max limit
3	“Click” the Max Analog button	Max LED changes from red to amber or flashing amber

	Remote Line Method (0.04 s < T < 0.8 s)	
Step	**Action**	Result
1	Position the target for the Max Analog limit	Sensor learns the 10 V dc or 20 mA limit
2	Double-pulse the remote line 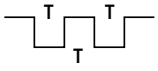	Max Analog LED flashes red once

Teaching Limits Using the Auto-Window Feature

Teaches a sensing distance threshold centered within a fixed sensing window (a 1 m window centered on the position taught). This procedure centers the analog output on the taught position at approximately 5 V dc or 12 mA.

Setting the Minimum Analog Limit

	Push **Button** Method	
Step	**Action**	Result
1	Push and hold the Min Analog button	Min Analog LED turns ON red
2	“Click” the Max Analog button	Max Analog LED turns ON red (both the Min and Max Analog LEDs should now be ON)

	Remote Line Method (0.04 s < T < 0.8 s)	
Step	**Action**	Result
1	Position the target at the location where the midpoint of the window should be.	Min and Max LEDs both flash red (0.5 second), then turn amber
2	Triple-pulse the remote line 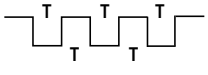	

Setting the Maximum Analog Limit

	Push **Button** Method	
Step	**Action**	Result
1	Position the target at the location where the midpoint of the window should be.	Its LED flashes red
2	“Click” either push button	

	Push **Button** Method	
Step	**Action**	Result
3	"Click" the other push button	The Red Teach LEDs change to amber and the sensor returns to RUN mode

	Remote Line Method (0.04 s < T < 0.8 s)	
Step	**Action**	Result
1	Position the target at the location where the midpoint of the window should be.	Min and Max LEDs both flash red (0.5 second), then turn amber
2	Triple-pulse the remote line 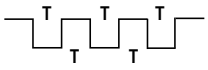	

Push **Button** Lockout

The Push Button Lockout feature enables or disables the keypad to prevent unauthorized personnel from adjusting the programming settings. This feature is not available using the buttons.

Procedure (0.04 s < T < 0.8 s)	Result
Four-pulse the remote line 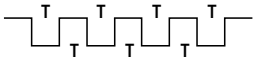	Push buttons are either enabled or disabled, depending on previous condition.

Status Indicators

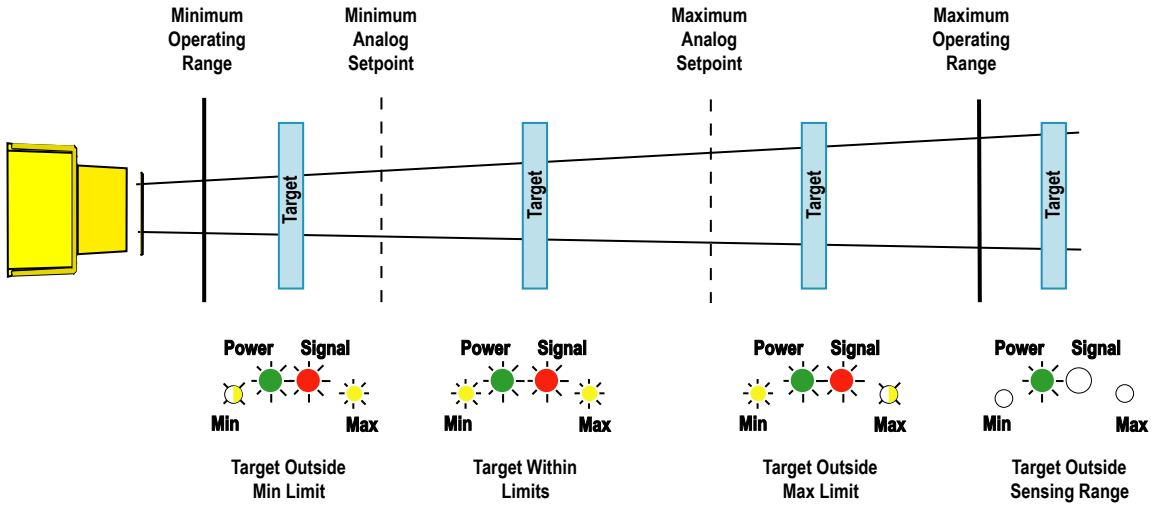

Figure 5. Status Indicator Conditions for Each Target Position

Signal LED (Red) – indicates the strength and **condition** of the sensor's incoming signal.	
Signal LED Status	Indicates
ON Bright	Good signal
ON Dim	Marginal signal strength
OFF	No signal is received or the target is beyond the sensor's range limitations

Output LEDs (Amber) – indicate the **position** of the target **relative** to the window limits.	
Output/Teach LED	Indicates
ON Red (either)	In Teach mode; waiting for limits to be taught
Min Analog ON Amber Max Analog ON Amber	Target is within analog window limits
Min Analog ON Amber Max Analog Flashing Amber	Target is outside max. window limit
Min Analog Flashing Amber Max Analog ON Amber	Target is outside Min window limit
Min Analog OFF Max Analog OFF	No signal condition or Outside operating limits

Power ON/OFF LED (Green) – indicates the **operating** status of the sensor.	
Power ON/OFF LED	Indicates
OFF	Power is OFF
Flashing at 2 Hz	Transmit disabled (see DIP switch settings)
ON Solid	Sensor is operating normally

Wiring

Integral Cable Model	Quick-Disconnect Model (5-pin Mini-style)	Quick-Disconnect Model (5-pin Euro-style)
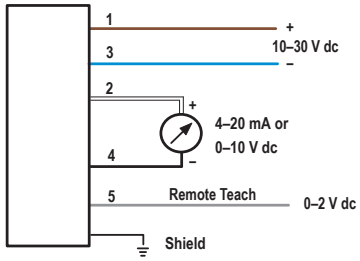	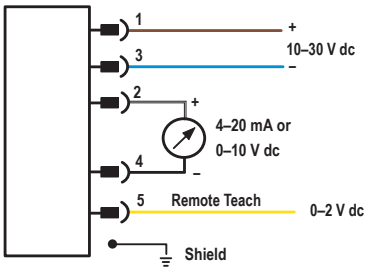	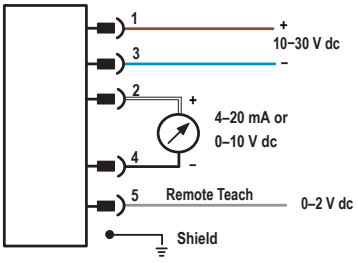
1 = brown 2 = white 3 = blue 4 = black 5 = gray	1 = brown 2 = white 3 = blue 4 = black 5 = yellow	1 = brown 2 = white 3 = blue 4 = black 5 = gray

Banner recommends connecting the shield wire to earth ground or dc common.

Dimensions

Cabled Models | 5-pin Mini-style Models | 5-pin Euro-style Models

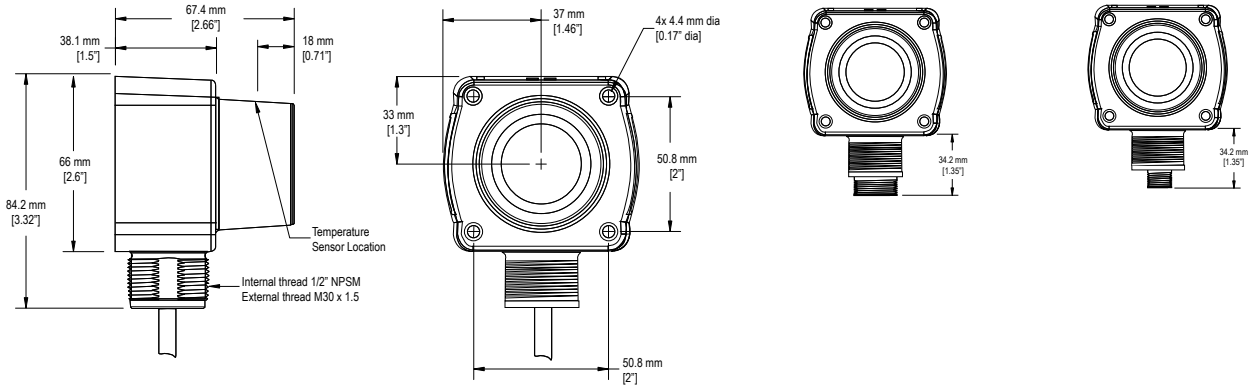

Specifications

Supply Voltage and Current
10 to 30 V dc (10% maximum ripple)
100 mA max at 10 V, 40 mA max at 30 V (exclusive of load)

Sensing Range
200 mm to 8 m (8 inches to 26 feet)

Ultrasonic Frequency
75 kHz burst, rep. rate 96 ms

Supply **Protection** Circuitry
Protected against reverse polarity and transient overvoltages

Output **Protection**
Protected against short circuit conditions

Delay at Power-up
1.5 seconds

Analog Output **Configuration** (Voltage Sourcing: 0 to 10 V dc)
Minimum Load Resistance = 500 ohms
Minimum Required Supply Voltage for Full 0-10 V Output Span = (1000/RLoad + 13) V dc

Analog Output **Configuration** (Current Sourcing: 4 to 20 mA)
Maximum Load Resistance = 1 kΩ or (Vsupply/0.02 - 5) ohms, whichever is lower
Minimum required supply voltage for full 4-20 mA output span = 10 V dc or [(RLoad × 0.02) + 5] V dc, whichever is greater.
4 to 20 mA output calibrated at 25 °C with a 250 Ω load.

Temperature **Effect**
Uncompensated: 0.2% of distance/°C
Compensated: 0.02% of distance/°C

Linearity
+/- 0.2% of span from 200 to 8000 mm
+/- 0.1% of span from 500 to 8000 mm (1 mm minimum)

Resolution
1.0 mm

Output Response Time
100 ms to 2300 ms
See DIP Switches 5 and 6

Minimum Window Size
20 mm

Adjustments
Sensing window limits: TEACH-Mode programming of near and far window limits may be set using the push buttons or remotely via TEACH input.

Indicators
Green Power On LED: Indicates power is ON
Red Signal LED: Indicates target is within sensing range, and the condition of the received signal
Teach/Output indicator (bicolor Amber/Red): Amber – Target is within taught limits; Flashing Amber – Target is outside taught window limits; Red – Sensor is in TEACH mode

Remote TEACH
To Teach: Connect gray or yellow wire to 0 to 2 V dc; impedance 12 kΩ

Construction
Transducer: Ceramic/Epoxy composite
Housing: ABS/Polycarbonate
Membrane Switch: Polyester
Lightpipes: Acrylic

Operating Conditions
Temperature: –20 °C to 70 °C (–4 °F to 158 °F)
Maximum relative humidity: 100%

Connections
2 m (6.5 ft) or 9 m (30 ft) shielded 5-conductor (with drain) PVC jacketed attached cable or 5-pin Euro-style quick-disconnect or 5-pin Mini-style quick-disconnect

Environmental **Rating**
Leakproof design is rated IEC IP67; NEMA 6P

Vibration and Mechanical Shock
All models meet Mil Std. 202F requirements. Method 201A (vibration: 10 to 60Hz max., double amplitude 0.06", maximum acceleration 10G). Also meets IEC 947-5-2 requirements: 30G 11 ms duration, half sine wave

Temperature Warmup **Drift**
Less than 0.8% of sensing distance upon power-up with Temperature Compensation enabled (see Temperature Compensation)

Application Notes
Objects passing inside the specified near limit (200 mm) may produce a false response.

Certifications

Performance Curves

QT50U **Effective** Beam **Pattern**

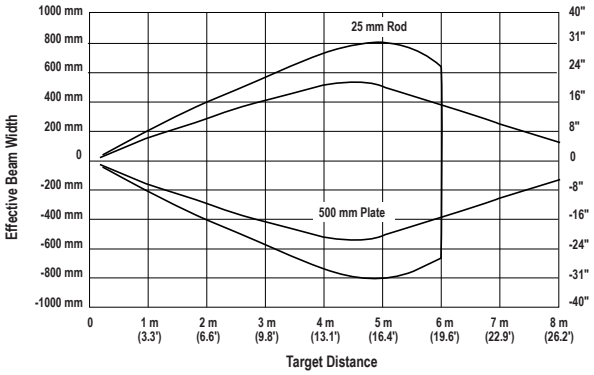

QT50U (with 500 mm Plate) Maximum Target **Rotation** Angle

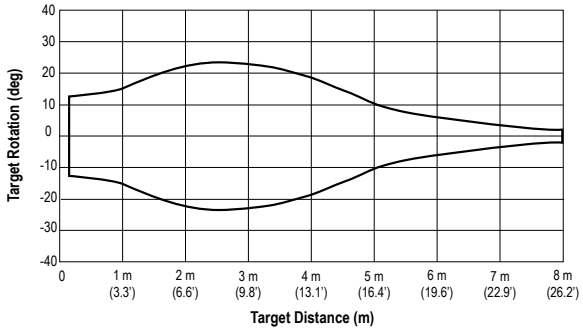

Accessories

Cordsets

5-Pin Mini-Style Cordsets—with Shield				
Model	Length	Style	Dimensions	Pinout (Female)
MBCC2-506	1.83 m (6 ft)	Straight	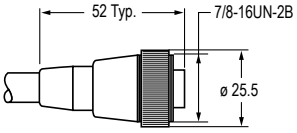	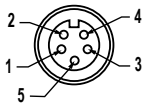 1 = Brown 2 = White 3 = Blue 4 = Black 5 = Yellow
MBCC2-512	3.66 m (12 ft)			
MBCC2-530	9.14 m (30 ft)			

5-Pin Threaded M12/Euro-Style Cordsets—with Shield				
Model	Length	Style	Dimensions	Pinout (Female)
MQDEC2-506	1.83 m (6 ft)	Straight	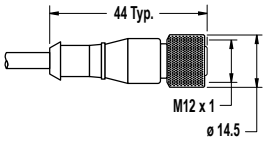	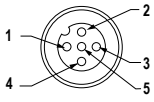 1 = Brown 2 = White 3 = Blue 4 = Black 5 = Gray
MQDEC2-515	4.57 m (15 ft)			
MQDEC2-530	9.14 m (30 ft)			
MQDEC2-550	15.2 m (50 ft)			
MQDEC2-506RA	1.83 m (6 ft)	Right-Angle	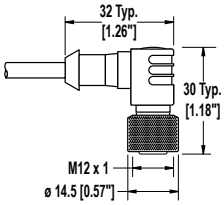	
MQDEC2-515RA	4.57 m (15 ft)			
MQDEC2-530RA	9.14 m (30 ft)			
MQDEC2-550RA	15.2 m (50 ft)			

Brackets

SMB30SC

- Swivel bracket with 30 mm mounting hole for sensor
- Black reinforced thermoplastic polyester
- Stainless steel mounting and swivel locking hardware included

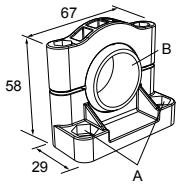

Hole center spacing: A=ø 50.8
Hole size: A=ø 7.0, B=ø 30.0

SMB30MM

- 12-ga. stainless steel bracket with curved mounting slots for versatile orientation
- Clearance for M6 (¼ in) hardware
- Mounting hole for 30 mm sensor

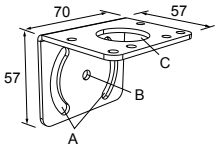

Hole center spacing: A = 51, A to B = 25.4
Hole size: A = 42.6 x 7, B = ø 6.4, C = ø 30.1

SAFQT50U

- PVC **mounting flange** mounts to the front of a QT50U sensor (not for use with chemical-resistant models).
- Adapts sensor to thread into standard 50.8 mm (2 in) NPT female threads



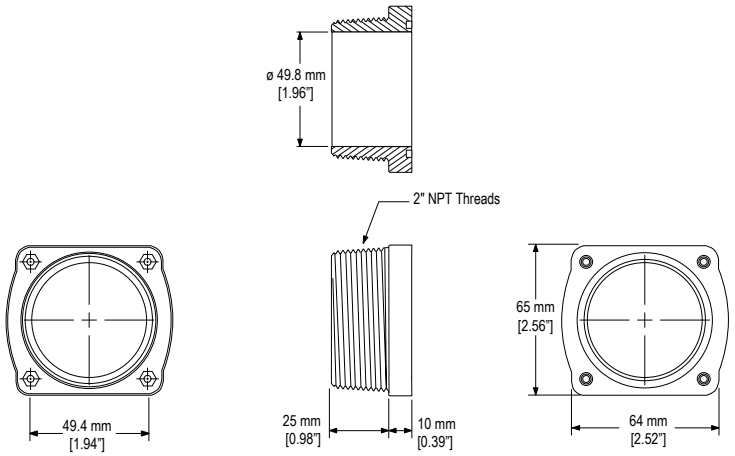

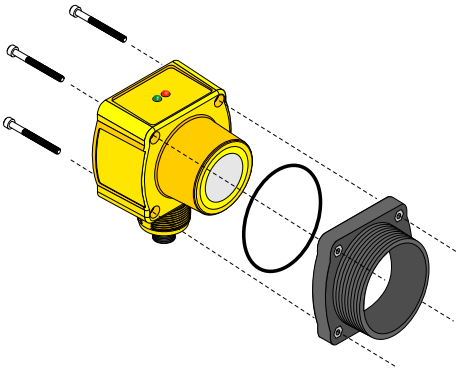

1. Place o-ring in flange groove.
2. Assemble sensor onto threaded flange as shown, using the M4 screws supplied with the QT50U sensor.
3. Using the supplied hex wrench, torque screws to approximately 1.1 kg/m (10 in/lbs).
4. Mount sensor/flange assembly into the 50.8 mm (2 in) NPT fitting.

Banner Engineering Corp Limited Warranty

Banner Engineering Corp. warrants its products to be free from defects in material and workmanship for one year following the date of shipment. Banner Engineering Corp. will repair or replace, free of charge, any product of its manufacture which, at the time it is returned to the factory, is found to have been defective during the warranty period. This warranty does not cover damage or liability for misuse, abuse, or the improper application or installation of the Banner product.

THIS LIMITED WARRANTY IS EXCLUSIVE AND IN LIEU OF ALL OTHER WARRANTIES WHETHER EXPRESS OR IMPLIED (INCLUDING, WITHOUT LIMITATION, ANY WARRANTY OF MERCHANTABILITY OR FITNESS FOR A PARTICULAR PURPOSE), AND WHETHER ARISING UNDER COURSE OF PERFORMANCE, COURSE OF DEALING OR TRADE USAGE.

This Warranty is exclusive and limited to repair or, at the discretion of Banner Engineering Corp., replacement. IN NO EVENT SHALL BANNER ENGINEERING CORP. BE LIABLE TO BUYER OR ANY OTHER PERSON OR ENTITY FOR ANY EXTRA COSTS, EXPENSES, LOSSES, LOSS OF PROFITS, OR ANY INCIDENTAL, CONSEQUENTIAL OR SPECIAL DAMAGES RESULTING FROM ANY PRODUCT DEFECT OR FROM THE USE OR INABILITY TO USE THE PRODUCT, WHETHER ARISING IN CONTRACT OR WARRANTY, STATUTE, TORT, STRICT LIABILITY, NEGLIGENCE, OR OTHERWISE.

Banner Engineering Corp. reserves the right to change, modify or improve the design of the product without assuming any obligations or liabilities relating to any product previously manufactured by Banner Engineering Corp. Any misuse, abuse, or improper application or installation of this product or use of the product for personal protection applications when the product is identified as not intended for such purposes will void the product warranty. Any modifications to this product without prior express approval by Banner Engineering Corp will void the product warranties. All specifications published in this document are subject to change; Banner reserves the right to modify product specifications or update documentation at any time. Specifications and product information in English supersede that which is provided in any other language. For the most recent version of any documentation, refer to: *www.bannerengineering.com*.

© Banner Engineering Corp. All rights reserved