Machine Monitoring Application Guide

Using a TL70 Modular Tower Light with a wireless radio base improves machine monitoring and overall equipment effectiveness (OEE) by expanding available data beyond the local indication a standard tower light provides.

Beyond local indication, each TL70 can provide the remote status of each light module, track the cumulative time ON for each light module, count the number of times each module transitions from the OFF to ON state, and count parts. This system provides the information necessary to react quickly to system changes and drive efficiency improvements based on data that was previously unavailable.

The following guide demonstrates how to bind the wireless tower lights to the DXM and load a preconfigured XML file and script to collect data from up to 24 wireless tower lights. The XML file only requires some minor modifications to be customized for any site.

Machine Monitoring Guide Features and Benefits

Machine Monitoring	Monitor machine inputs with up to four tower light modules (on up to 24 tower lights) and eight states (flashing or solid for each light module).
Up Time	Track cumulative ON time for each light module for both flashing or solid independently.
Event Counters	Count the number of times each light module transitions from OFF to ON for both flashing or solid independently.
Parts Counting	Count parts produced or rejected using internal 32-bit register in the TL70 Tower Light.
Remote Master Light	Use a master light to show the combined status of all light modules.
Time Stamped Logging	Time-stamped logging of light statuses, timers, counts, and part counts to a local SD memory card.
SMS Text and Email Alerts	Generate SMS text and/or email alerts based on specific events.
Efficiency Metrics	Produce efficiency metrics with provided data (Avg. Availability, Production Speed, Production Quality, etc.).
Cloud Monitoring	Push data to Cloud Webserver or PLC (via LAN or Cellular connection) for remote viewing, alerting, and logging.

Equipment



Model	Description
TL70DXN9XXXQ or **TL70DXN2XXXQ** (XXX is any combination of light colors)	EZ-LIGHT TL70 Wireless Modular Tower Light; Select either the 900 MHz or 2.4 GHz ISM radio to match the DXM's ISM radio
DXM700-B1R1 or **DXM700-B1R3**	DXM700 Wireless Controller; select either 900 MHz or 2.4 GHz ISM radio to match the TL70's ISM radio. The DXM1200 models will also work in this application. To order the DXM1200, replace the **DXM700** in the model with **DXM1200**.

Original Instructions
05-May-26

© Banner Engineering Corp. All rights reserved.
www.bannerengineering.com

b_4437437
p/n: b_4437437 Rev F

ПРОМЭЛЕКТРОНИКА/ sales@prom-elec.com

Bind the TL70 to the DXM and Assign the Device ID

Binding the TL70s to the DXM establishes a secure connection between them and assigns a specific network address to each TL70 in the wireless network.

1. Apply power the TL70s.
   TL70s require a constant power source to maintain wireless communications with the DXM, unlike typical tower lights that use only machine power when lighting.
2. Apply power to the DXM.
3. On the DXM: Use the arrow button to select the **ISM Radio** menu on the LCD. Press **Enter**.
4. Select **Binding** and press **Enter**.
5. Select **Bind to > 1** (the first Node) and press **Enter**.
6. On TL70 Node 1: Remove the base section by grasping the lighting modules and twisting the base clockwise.
7. Triple-click the binding button.

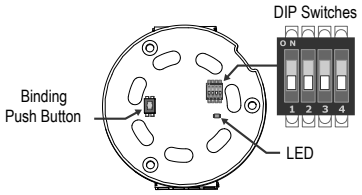

   The LED flashes four times after it binds to the DXM. This Node is now bound as Node ID 1. Label the TL70 for future reference.
8. Reconnect the TL70's base to its light modules.
9. On the DXM: Press **Back** to return to the main menu.
10. To bind additional TL70s, select **Bind to > 2** and press **Enter**.
11. On TL70 Node 2: Repeat steps 6 through 9.
    If more TL70s are being used in the system, continue binding until all TL70s are bound to the DXM with each having their own Node ID.
12. When you are finished binding, press **Back** on the DXM until the DXM returns to the main menu.

Conduct a Site Survey from the DXM

Conduct a Site Survey to verify the wireless communication between the radios within your wireless network.

Conduct the site survey when the Nodes and DXM Controller are at the proposed installation sites to determine each radio's signal strength with the DXM.

1. On the DXM: Use the arrow buttons to select the **ISM Radio** menu and press **ENTER**.
2. Select the **Site Survey** menu and press **ENTER**.
3. Use the Up or Down arrows to select the device ID number and press **ENTER** to run the site survey with that radio.
   The site survey results display as green, yellow, red, and missed packets. Green indicates the highest signal strength, then yellow, and red. Missed packets were not received.
4. When you are finished running the Site Survey, press **Back** twice to return to the main menu and exit site survey mode.

If the Site Survey fails (100 missed packets), verify the radios are at least 10 feet from the DXM and/or rerun the binding procedure. If you find poor signal quality, common solutions include moving the DXM to a more central location relative to the Nodes or using higher-gain antennas on the DXM. Contact your local Banner Engineering representative for assistance.

Wire the TL70 Tower Lights

Each TL70 requires its own dedicated 12–30 V DC power supply. The light modules also need to be triggered by the machine being monitored and wired as shown.

A flashing condition is automatically detected as a separate state as long as it is between 0.8 Hz and 6 Hz.

To use the TL70 for part counting:

1. Wire a sensing device with a PNP (sourcing) output (12–30 V DC), such as the QS18, QS30, Q4X, etc, into pin 8.
2. Change DIP switch 3 in the TL70 light base to the ON position.

When using the part counter, the measured signal must be greater than or equal to 25 ms. The total counts are stored in the TL70 and reported to the master radio. A lost radio link or interruption in the radio signal to the DXM does not interrupt the part counting. As soon as the radio link re-establishes, the correct count is reported from the TL70 to the DXM.

© Banner Engineering Corp. All rights reserved.
www.bannerengineering.com

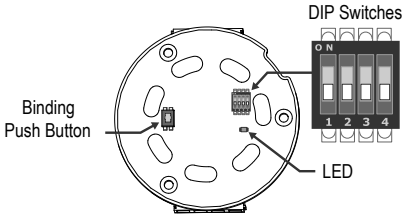

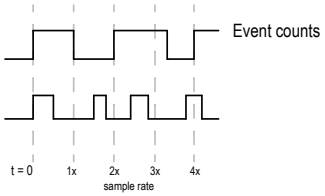

The 5-pin base allows a maximum of three modules

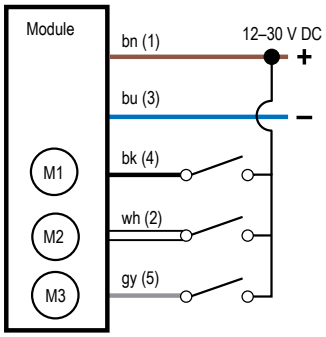

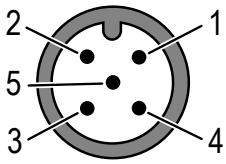

1 = brown
2 = white
3 = blue
4 = black
5 = gray
M1 = Module 1
M2 = Module 2
M3 = Module 3

The 8-pin base allows for four modules and part counting

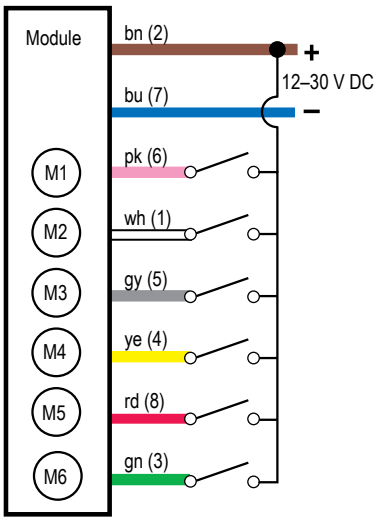

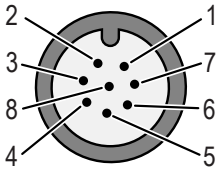

1 = white
2 = brown
3 = green
4 = yellow
5 = gray
6 = pink
7 = blue
8 = red (event counter input, if enabled)
M1 = Module 1
M2 = Module 2
M3 = Module 3
M4 = Module 4
M5 = Module 5
M6 = Module 6

Configure the System

To customize the system to an actual application, some basic modifications to the template files are necessary.

There are two files uploaded to the DXM: the XML file sets the DXM's initial configuration and the ScriptBasic file reads the status of light modules, controls the counting of each light, establishes a reset function for each TL70s timers and counts, and organizes the information in logical and easy-to-find registers in the DXM.

Loading these files and making adjustments requires Banner's DXM Configuration Software and the machine monitoring files available via the links below.

1. Download the preconfigured files (p/n b_4435151) from the DXM or Wireless TL70 series pages.
2. Extract the ZIP files into a folder on your computer. Note the file location.
3. Connect the DXM, using the USB cable supplied with the DXM, to a computer containing the DXM Configuration Software or download the software and install it on a computer.
4. Launch the software.
5. Load the Machine Monitoring XML file (TL70) by going to **File › Open** and choosing the XML configuration file.

© Banner Engineering Corp. All rights reserved.
www.bannerengineering.com

6. Connect to the DXM.
    a. Go to **Select Mode** screen.
    b. Select **Serial** and then select the COM port that the USB cable is plugged into.
    c. Click **Connect**. If you are unsure which COM port is being used and multiple ports appear, attempt to connect to each one until you are successful.
7. Go to **Settings › Scripting** to upload the Machine Monitoring XML file (TL70). Click **Upload File** and select the .sb file.
8. Save the XML file anytime the XML has been changed because the tool does not autosave.

Customize the XML File

1. Within the DXM Configuration Software, go to the **Local Registers › Local Registers in Use** screen.

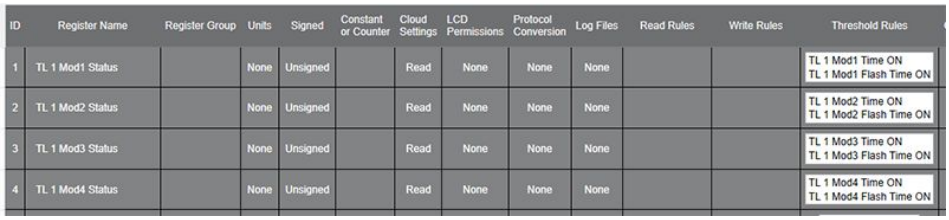

ID	Register Name	Register Group	Units	Signed	Constant or Counter	Cloud Settings	LCD Permissions	Protocol Conversion	Log Files	Read Rules	Write Rules	Threshold Rules
1	TL 1 Mod1 Status		None	Unsigned		Read	None	None	None			TL 1 Mod1 Time ON TL 1 Mod1 Flash Time ON
2	TL 1 Mod2 Status		None	Unsigned		Read	None	None	None			TL 1 Mod2 Time ON TL 1 Mod2 Flash Time ON
3	TL 1 Mod3 Status		None	Unsigned		Read	None	None	None			TL 1 Mod3 Time ON TL 1 Mod3 Flash Time ON
4	TL 1 Mod4 Status		None	Unsigned		Read	None	None	None			TL 1 Mod4 Time ON TL 1 Mod4 Flash Time ON

2. Rename the Tower Lights using the text boxes within the **Register Name** column.

   Because there are 25 registers per tower light to accommodate up to four modules per tower light, a timer for each module (flashing and solid), and a count for each module (flashing and solid), copy and paste names for efficiency.
3. Configure your application to receive email or text alerts when any of the light modules turn on.
    a. Go to **Local Registers › Action Rules › Thresholds** and click on the arrow next to the rule's name to display the parameters of ANY Module X ON rule.
    b. Click on the arrow next to **Email/SMS on State Transition**.
    c. Select the recipient of the SMS and/or email upon any of the Tower Light's specific modules transitioning to ON. Note that any potential email or text message recipient must first be defined in the **Settings › Notifications** screen.

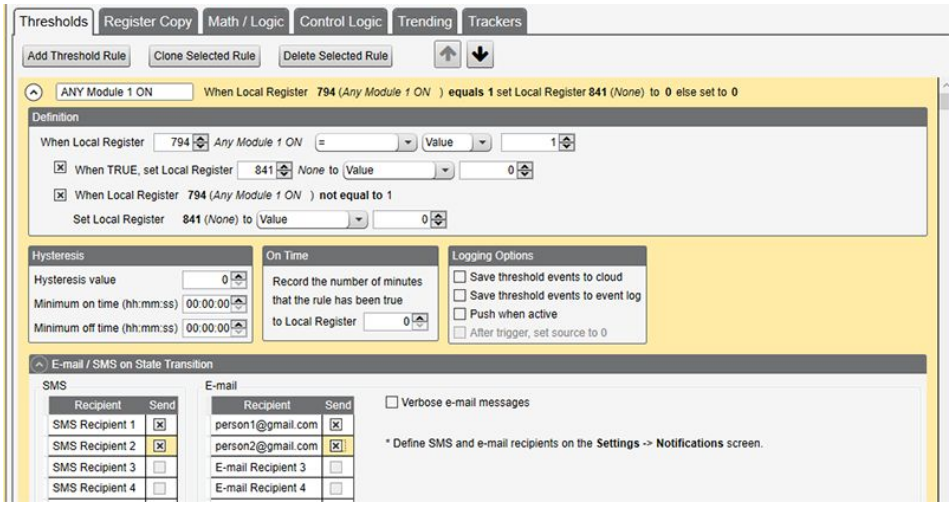

Set Up the Ethernet or Cellular Connection

By default, the DXM with an Ethernet Push interface is configured to push the data registers to a web server. The DXM can also be configured to use a cellular push if the DXM Controller contains a cellular module and data plan. This section is only necessary if you want to receive or display information to more than the DXM Controller's LCD.

1. On the **Local Registers in Use** screen, set the **Value Type** of register 844 to **Constant** and a value of 1 to enable the data push.
2. If the DXM will push to the cloud web server, set up the push interface.
    a. Go to the **Settings › Cloud Services** screen.
    b. From the **Network Interface** drop-down list, select either **Ethernet** or **Cell**. Selecting **Cell** requires a cellular module be installed in the DXM Controller and a wireless plan be set up for sending data.
3. Set the **Cloud Push Interval** to **None**. The script associated with this file establishes the five-minute push interval internally so that it occurs immediately after the sample of the sensors.

© Banner Engineering Corp. All rights reserved.
www.bannerengineering.com

Save and Upload the Configuration File

After making any changes to the configuration, you must save the configuration files to your computer, then upload it to the device.

Changes to the XML file are not automatically saved. Save your configuration file before exiting the software and before sending the XML file to the device to avoid losing data. If you select **DXM › Send XML Configuration to DXM** before saving the configuration file, the software will prompt you to choose between saving the file or continuing without saving the file.

1. Save the XML configuration file to your hard drive by going to the **File › Save As** menu.
2. Go to the **DXM › Send XML Configuration to DXM** menu.

Status indicator bar



   - If the Application Status indicator is red, close and restart the DXM Configuration Software, unplug and re-plug in the cable and reconnect the DXM to the software.
   - If the Application Status indicator is green, the file upload is complete.
   - If the Application Status indicator is gray and the green status bar is in motion, the file transfer is in progress.

   After the file transfer is complete, the device reboots and begins running the new configuration.

Push Information to BannerCDS

The DXM Wireless Controller can connect to the Web via Ethernet or an internal cell module. The controller pushes data from the DXM to be stored and displayed on a website.

The Banner platform for storing and monitoring the system's data is https://bannercds.com. The Banner Cloud Data Services website automatically generates dashboard content for the application that is populated onto the Dashboard. Email alerts can be configured using the Alarms screen.

To push data to the cloud, change register 844 to one (1).

For more information on creating accounts on and using the Banner Cloud Data Services (CDS) system, please refer to the Banner CDS Quick Start Guide (p/n 201126).

Create a New Gateway

Each Gateway in the BannerCDS corresponds to a DXM Controller that sends data to the BannerCDS platform.

After you log in to the Banner Cloud Data Services website, the **Overview** screen displays. Follow these steps to create a new monitoring site.

Create a new Gateway

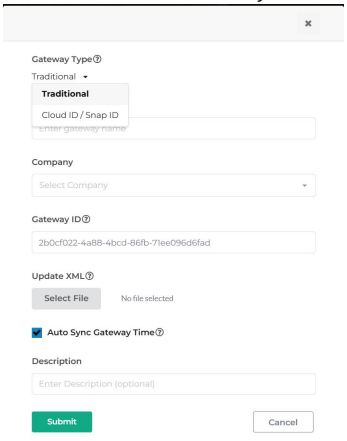

There are two connection methods:

- Traditional Method – Used in most cases; requires entering a Gateway ID into the DXM XML configuration
- Auto-Discovery Method – Used only for Smart Solutions Starter Kits and Expansion Kits; requires the DXM serial number

1. From either the **Overview** screen of the Gateways screen, click on **+ New Gateway** (top right corner of the screen).
   A **New Gateway** pop-up window appears.
2. Select the **Gateway Type**.
   - For most configurations, select **Traditional**.
   - For Cloud ID or SNAP ID products, select **Cloud ID/SNAP ID**.
3. Enter a **Gateway Name**.
4. Select the **Company** from the drop-down list.
5. For Traditional configurations, copy the **Gateway ID** number located within the prompt window to your computer's clipboard. For Cloud ID/SNAP ID configurations, enter the **DXM Serial** number.

   The **Gateway ID** number created by the web server is a required parameter in the configuration of the DXM. The **Gateway ID** is the address the webserver uses to store the data pushed from the DXM.
6. Enter an optional **Description** of this gateway/controller.
7. Click **Submit** to close the prompt window.
8. For **Traditional** configurations, go to the DXM Configuration Software:
   a. Go to the **Settings › Cloud Services › Web Server.** screen.
   b. Enter the **Gateway ID**.
   c. Save the XML configuration file.

© Banner Engineering Corp. All rights reserved.
www.bannerengineering.com

d. Upload the XML configuration file to your DXM Controller.
e. On the BannerCDS website, select your Gateway and click the Edit icon (left column).
f. Upload the updated XML configuration file and **Save**.

The DXM Controller begins pushing data to BannerCDS.

Configure the DXM to Push Information to the Cloud

> **IMPORTANT:** Do not adjust the Cloud Push Interval. The push frequency is controlled by the script. Adjusting the cloud push interval through this configuration may result in excessive amounts of data being pushed to Banner CDS.

1. Within the DXM Configuration Software, go to the **Local Registers in Use** screen.
2. Set the **Value Type** of register 844 to **Constant** and a value of 1 to enable the data push.
3. Go to the **Settings › Cloud Services** screen.
4. Set the **Server name/IP** to push.bannercds.com.
5. In the **Web Server** section, paste the **Gateway ID** copied from the BannerCDS configuration screen into the appropriate field.
6. Use the **File › Save** menu to save the XML file to your hard drive.
7. Send the updated XML to the DXM Controller using the **DXM › Send XML Configuration to DXM** menu.

Upload the XML Configuration File to the Website

To upload an XML configuration file to the website, follow these instructions.

1. On the BannerCDS website, select **Gateways** on the **Overview** screen.
2. On the row displaying your **Gateway**, click the **Details** under **View**.
3. Select **Edit Gateway**.
   The **Edit Gateway** prompt appears.
4. Click **Select File** under **Update XML**.
5. Select the file that was just updated to the DXM and click **Open**.
   After the XML file is loaded into the webserver, the webserver uses the register names and configurations defined in the configuration file. The same XML configuration file is now loaded on both the DXM and the Website. After some time, the data should be seen on the website.
6. To view the data from the Gateway's screen, click on the **Details** link for each **Gateway**.
   The Gateway **Details** screen lists the **Sensor** objects and default **Alarms** for that gateway. You may view the individual register information by selecting **Registers**.

Completing these steps creates continuity between the **Gateway** created on the website with the DXM used in the field. The DXM pushes data to the website, which can be viewed at any time.

Additional Information

Reset the Timer and Counts

Each TL70 in the system has a reset register that is available from the DXM's LCD. Setting this register to 1 resets all the counts and timers on that particular TL70.

1. On the DXM: Use the arrows to select Registers.
   The registers are labeled **TL X Reset** (where X is the TL70 Node ID you want to reset).
2. Select the appropriate register to reset.
3. Click the **Enter** button.
4. Change the value to 1 then click **Enter** three times.
   The reset register automatically returns to zero after the TL70s reset.

Create a Master Light

Local Registers 794–797 are used to OR each module independently for all the TL70s (for example, 794 is 1 when ANY tower light in the system has module #1 on or flashing). A master light can be used as one of the 24 in the system to reflect these OR'd statuses.

1. On the DXM Configuration Software: Go to **Register Mapping › Write Rules**.
2. Select **Add Write Rule** and map four registers starting at 794 to slave ID #1 at the four output registers for the Master Light.

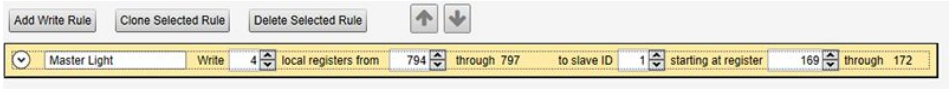

   The register number for the master light outputs is N × 16 + 9, where N is the Node ID of the master light. The example shows the setup for the Master Light on Node ID 10 (10 × 16 + 9 = 169).

© Banner Engineering Corp. All rights reserved.
www.bannerengineering.com

Configure Time-Stamped Logging

By default, the files associated with this guide trigger a time-stamped event in the log each time a tower light module changes status or once per hour if no changes have occurred.

Change the hourly log rate by modifying the value in register 842, which is listed in seconds. Note this also modifies the cloud push rate if it is used. To set up time-stamped logging, follow these steps.

1. Go to the **Local Registers › Modify Multiple Registers** screen.
2. Click **Reset Form**.
3. From the SD Card Logging drop-down list, select **Change**.
4. Select Log 1 in the drop-down list that appears to the right.
5. Set the Starting Register to 1 and the Ending Register to the value equal to 25 × Number of tower lights in the system (ex. Ending Register 300 for 12 tower lights).
6. Click **Change Registers** on the bottom right portion of the section.

Save a Log File

1. Connect the DXM to the computer using USB or Ethernet.
2. Connect the DXM Configuration Software to the DXM using the **Select Mode** screen.
3. Go to the **Settings › Logging** screen.
4. Click **Refresh List**.
5. In the **Log File Management** window, select the file to save.
6. Click **Save selected file** to save the file to a folder on your computer.

Machine Monitoring Local Registers

Where N represents the TL70 Node ID.

	Local Register #	Description
Tower Light Module Status	1 + 25 × (N – 1)	Module 1 Status (ON/OFF/Flash)
	2 + 25 × (N – 1)	Module 2 Status (ON/OFF/Flash)
	3 + 25 × (N – 1)	Module 3 Status (ON/OFF/ Flash)
	4 + 25 × (N – 1)	Module 4 Status (ON/OFF/Flash)
Tower Light Module Timers	5 + 25 × (N – 1)	Module 1 Time ON (Minutes)
	6 + 25 × (N – 1)	Module 2 Time ON (Minutes)
	7 + 25 × (N – 1)	Module 3 Time ON (Minutes)
	8 + 25 × (N – 1)	Module 4 Time ON (Minutes)
Tower Light Module Count	9 + 25 × (N – 1)	Module 1 Count
	10 + 25 × (N – 1)	Module 2 Count
	11 + 25 × (N – 1)	Module 3 Count
	12 + 25 × (N – 1)	Module 4 Count
Tower Light Module Timers	13 + 25 × (N – 1)	Module 1 Flash Time ON (Minutes)
	14 + 25 × (N – 1)	Module 2 Flash Time ON (Minutes)
	15 + 25 × (N – 1)	Module 3 Flash Time ON (Minutes)
	16 + 25 × (N – 1)	Module 4 Flash Time ON (Minutes)
Tower Light Module Count	17 + 25 × (N – 1)	Module 1 Flash Count
	18 + 25 × (N – 1)	Module 2 Flash Count
	19 + 25 × (N – 1)	Module 3 Flash Count
	20 + 25 × (N – 1)	Module 4 Flash Count
Part Count	21 + 25 × (N – 1)	Part Count
Tower Light All Modules OFF	22 + 25 × (N – 1)	All OFF Status
	23 + 25 × (N – 1)	All OFF Timer
Tower Light RF Connection Status	24 + 25 × (N – 1)	Connection Status
	25 + 25 × (N – 1)	Connection Status Timer
Bit-Packed Module Status	601–624	Module Status bit-packed for web push
Read Rule Module Statuses	625–648	Read Module 1 Statuses
	649–672	Read Module 2 Statuses

Continued on page 8

© Banner Engineering Corp. All rights reserved.
www.bannerengineering.com

Continued from page 7

	Local Register #	Description
	673–696	Read Module 3 Statuses
	697–720	Read Module 4 Statuses
TL70 Resets	770–793	TL70 Timer and Count Reset
OR'd Alerts	794	Any Module 1 active
	795	Any Module 2 active
	796	Any Module 3 active
	797	Any Module 4 active
Read Rule Connection Status	800–823	Read TL Connection Status
Connection Status Bit-Packed	826	Connection Status bit-packed for web push
Log Timer Constant	842	Time in seconds for Log and Cloud Push
Log Timer	843	Log Timer
Log Trigger	844	Trigger to Log/Cloud Push
Cloud Push	851	Enable cloud pushing from the script (0/1)
Part Count Push	852	Enable pushing of part counts (0/1)
First Run	853	Nonvolatile register used for initial setup by script
Delay Mode	854	Enable 4 second script loop delay for troubleshooting

© Banner Engineering Corp. All rights reserved.
www.bannerengineering.com