Q85 Series 10 to 48V dc Sensors

Solid-state sinking and sourcing outputs with optional timing logic

BANNER
the photoelectric specialist

- **Economical dc sensors in rugged, NEMA-6P (IEC IP67) Cycolac® ABS housings; 10 to 48V dc operation**
- **Models for polarized retroreflective, short-range and long-range diffuse, and opposed sensing modes**
- **Solid-state sinking and sourcing outputs, light and dark operate; on/off output or programmable timing logic**
- **All models include an alternative low-saturation sinking (NPN) output for direct interfacing to TTL circuitry**
- **Wiring chamber with two conduit entrances**
- **Indicators for OUTPUT ON & LIGHT SENSED (all models have Banner's patented* AID™ signal strength indicator system)**

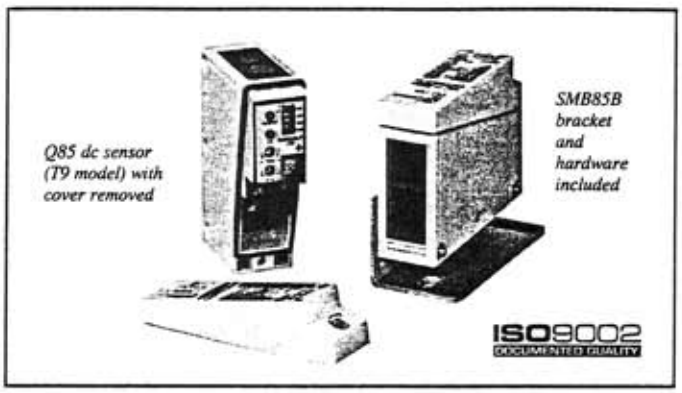

Q85 dc sensors are compact, economical, photoelectric sensors in rugged NEMA-6P rated ABS housings. They are ideally suited to conveyor control and similar applications. The timing logic functions offered in the "T9" models provide additional control capabilities over and above the ON/OFF (no delay) function of the basic models. Q85 sensors have a convenient wiring chamber with two conduit entrances for ease of connection and mounting.

Polarized retroreflective, short-range and long-range diffuse, and opposed mode models are offered. **See individual model descriptions, gain curves, and beam patterns, page 2.**

Q85 Series dc sensors operate from 10 to 48V dc and draw 50 mA maximum. All models have both a sinking (NPN) and a sourcing (PNP) solid-state output; each is capable of switching up to 150 mA (continuous). An alternative, low-saturation NPN output is also provided for easy, direct interfacing to TTL and similar circuitry. See page 3 for hookup diagrams. All models are switch-selectable for either light-operate or dark-operate output.

Q85 Series dc sensors are available with a choice of either ON/OFF output or programmable timing output logic models. Programmable timing logic ("T9") models provide eight switch-selectable logic functions: ON/OFF (no delay), ON delay, OFF delay, ON/OFF delay, one-shot (pulse), on-delayed one-shot, limit timer, and on-delayed limit timer. The adjustable time range for delay functions and pulse length is 0.1 to 5 seconds. All models have a SENSITIVITY control for precise adjustment of sensing gain.

Two top-mounted LED indicators are visible through a window in the wiring chamber's gasketed cover. The red indicator (Banner's exclusive AID™ system*) lights whenever the sensor "sees" its modulated light source, and pulses at a rate proportional to the strength of the received light signal. The yellow output indicator lights whenever a Q85 output is conducting.

Q85 Series sensors have rugged yellow Cycolac® ABS housings with ultrasonically-welded acrylic lenses. A gasketed ABS cover protects the wiring chamber and the timing and sensitivity adjustment controls inside. Two 1/2-14 NPSM conduit entrances are provided, and a plug and gasket are included for sealing of a possible unused entrance. Q85 Series sensors are rated NEMA 1, 2, 3, 3S, 4, 4X, 6, 6P, 12, and 13 (IEC IP67). An 11-gauge plated steel mounting bracket and two plated mounting bolts and nuts (see photo above and drawing on page 4) are included.

*Alignment Indicating Device system, US patent number 4356393

Specifications, Q85 Series 10 to 48V dc Sensors

Sensing range: see individual sensor specifications (page 2).

Sensing beam: see individual sensor specifications (page 2).

Supply voltage: 10 to 48V dc at 50 mA maximum, exclusive of load; Q8562E emitter requires 25 mA. All models reverse-polarity protected.

Outputs (all models except emitters):
Standard outputs are solid-state, one NPN (current sinking) and one PNP (current sourcing); 150 mA max. (at 25°C, either output). Derate output by 1 mA/°C above 25°C. Leakage current <1 µA (off-state). Output saturation voltage <1V at 10 mA and <2V at 150 mA. Standard outputs reverse-polarity, overload, and short-circuit protected. The two standard outputs may be used simultaneously (max. load 150 mA each output).

Low-saturation voltage alternative NPN (sinking) output is provided for easy interfacing to TTL and similar circuitry. Output saturation voltage <200 millivolts at 10 mA and <1V at 150 mA. Maximim load 150 mA (derate by 1 mA/°C above 25°C). Overload and short circuit protected. *This output is not reverse polarity protected. Exercise care to ensure correct polarity of the load hookup when making wiring connections.* All sensors are protected against false pulse on power-up: false pulse protection circuit causes a 100 millisecond delay on power-up.

Models are available with either ON/OFF output or 8 switch-selectable output timing functions ("T9" model suffix); see page 2.

Adjustments (all models except emitters):
Single-turn SENSITIVITY control potentiometer, accessible beneath the ABS wiring chamber cover. Timing logic (for T9 models) is configured at a DIP switch. Pulse length and delay are set by a single-turn potentiometer (under the wiring chamber cover). The adjustable time range for both functions is 0.1 to 5 seconds; both functions are automatically set to the same value. All models have a light/dark operate switch.

Response Time and Repeatability are independent of signal strength. See specifications under individual model listings, page 2.

Status Indicators (all models except emitters):
LEDs, one red and one yellow, both top-mounted.
Red AID™ system (Alignment Indicating Device, US patent #4356393) indicator LED lights whenever the sensor "sees" its own modulated light, and pulses at a rate proportional to the strength of the received light signal. **Yellow** indicator lights whenever the sensor's output is energized.

Construction: NOTE: Cycolac® is a registered trademark of General Electric Co. Yellow Cycolac® ABS housing, plated steel hardware. Acrylic lens. ABS cover for wiring/adjustments access. Rated NEMA 1, 2, 3, 3S, 4, 4X, 6, 6P, 12, and 13; IEC IP67. It is the customer's responsibility to maintain NEMA 6P integrity at the conduit entrance(s) in use. Maximum wire size (for connection to wiring terminals) is #14 AWG.

Operating temperature range: -25° to +55°C (-13° to +131°F).

Maximum relative humidity: 90% at 50°C (non-condensing).

Printed in USA

P/N 34326

ПРОМЭЛЕКТРОНИКА/ sales@prom-elec.com

Opposed Mode

Sensing range: 75 feet (23 meters)

Sensing beam: 680 nanometers, visible red

Effective beam diameter: 0.38 inches (9,6 mm)

Models:

Q8562E emitter (use with either receiver, below)

Q85BB62R receiver
solid-state outputs, one NPN (sinking)* and one PNP (sourcing); response time 1 millisecond, **repeatability** 125 microseconds

Q85BB62R-T9 receiver
solid-state outputs, one NPN (sinking)* and one PNP (sourcing) with programmable timer; response time 8 milliseconds, **repeatability** 1 millisecond (with no timing in use)

Excess Gain Curve

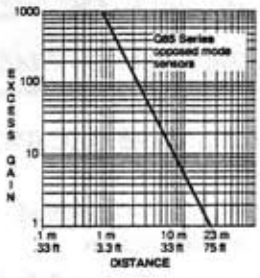

Beam Pattern

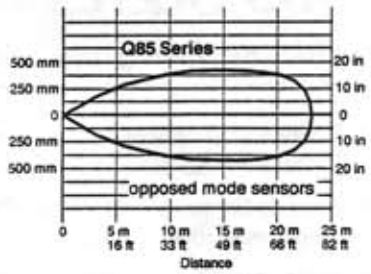

Polarized Retroreflective Mode

Sensing range: 3 inches (8 cm) to 15 feet (4,6 m) when used with Banner model BRT-3 3-inch retroreflective target

Sensing beam: 680 nanometers, visible red (polarized)

Models:

Q85BB62LP
solid-state outputs, one NPN (sinking)* and one PNP (sourcing); **response time** 1 millisecond, **repeatability** 250 microseconds

Q85BB62LP-T9
solid-state outputs, one NPN (sinking)* and one PNP (sourcing) with programmable timer; **response time** 8 milliseconds, **repeatability** 1 millisecond (with no timing in use)

Excess Gain Curve

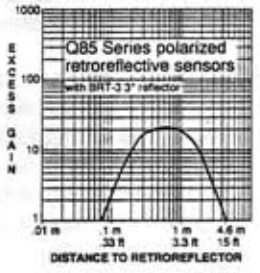

Beam Pattern

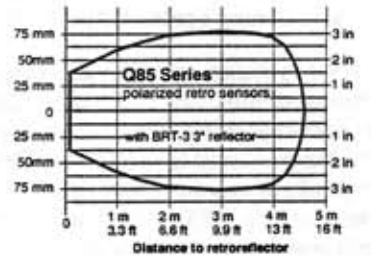

Short-range Diffuse Mode

Sensing range: 10 inches (250 millimeters) referenced to a 90% reflectance white test card

Sensing beam: 880 nanometers, infrared

Models (short-range diffuse):

Q85BB62D
solid-state outputs, one NPN (sinking)* and one PNP (sourcing); **response time** 1 millisecond, **repeatability** 250 microseconds

Q85BB62D-T9
solid-state outputs, one NPN (sinking)* and one PNP (sourcing) with programmable timer; **response time** 8 milliseconds, **repeatability** 1 millisecond (with no timing in use)

Excess Gain Curve

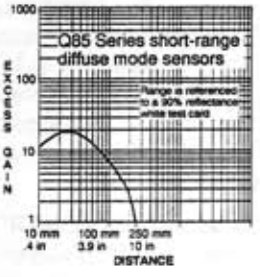

Beam Pattern

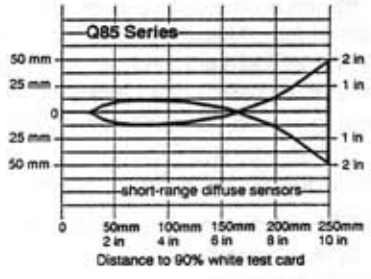

Long-range Diffuse Mode

Sensing range: 39 inches (1 meter) referenced to a 90% reflectance white test card

Sensing beam: 880 nanometers, infrared

Models (long-range diffuse):

Q85BB62DL
solid-state outputs, one NPN (sinking)* and one PNP (sourcing); **response time** 2 milliseconds, **repeatability** 500 microseconds

Q85BB62DL-T9
solid-state outputs, one NPN (sinking)* and one PNP (sourcing) with programmable timer; **response time** 8 milliseconds, **repeatability** 1 millisecond (with no timing in use)

Excess Gain Curve

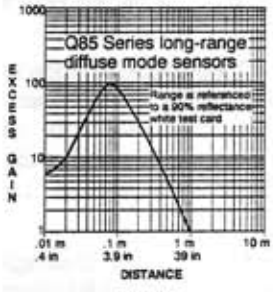

Beam Pattern

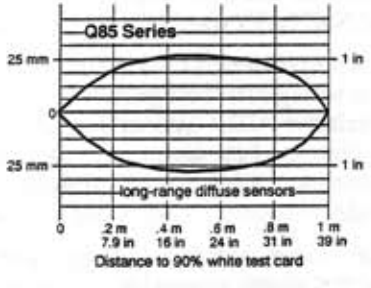

**There are two hookup schemes for the NPN output: either standard hookup or low-saturation hookup (not useable simultaneously).*

WARNING Q85 Series photoelectric presence sensors do NOT include the self-checking redundant circuitry necessary to allow their use in personnel safety applications. A sensor failure or malfunction can result in *either* an energized or a de-energized sensor output condition.

Never use these products as sensing devices for personnel protection. Their use as safety devices may create an unsafe condition which could lead to serious injury or death. Only MACHINE-GUARD and PERIMETER-GUARD Systems, and other systems so designated, are designed to meet OSHA and ANSI machine safety standards for point-of-operation guarding devices. No other Banner sensors or controls are designed to meet these standards, and they must NOT be used as sensing devices for personnel protection.

Q85 Series dc Sensors

Timing Logic Selection

The output timing logic function (on sensor models with T9 model number suffix) is selected at the *timing logic programming switches*, according to the table (below). The output timing logic delays are set at the single-turn *time adjustment* potentiometer. When the timing function involves more than one time (as in ON and OFF delay, ON-delayed one-shot, and ON-delayed limit timer functions), the potentiometer sets both times to the same value.

Logic function	Switch:	SW1	SW2	SW3
ON and OFF delays (both)		0	0	0
ON delay (only)		0	0	1
OFF delay (only)		0	1	0
No delays		0	1	1
ON delayed one-shot		1	0	0
ON delayed limit timer		1	0	1
One-shot		1	1	0
Limit timer		1	1	1

With the *light/dark operate switch* (all models) set to **light operate (L.O.)**, the sensor's outputs are energized when the sensor sees its own modulated light source. In the **dark operate (D.O.)** position, the outputs are energized when the sensor does not see its modulated light source. **Sensor sensitivity** is set at the single-turn *sensitivity* adjustment potentiometer.

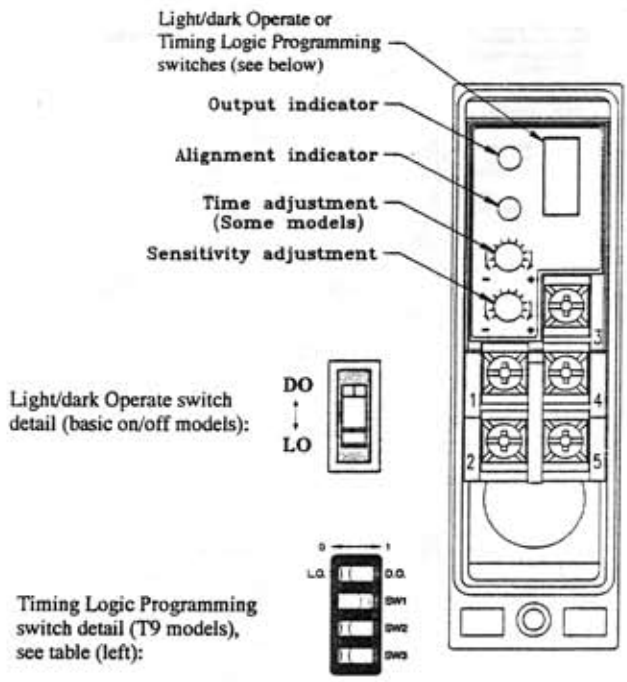

Sensor Hookup

Hookup to dc power and the external load is made at the five screw terminals inside the wiring chamber. **DC power** is connected at terminals #1 and #2. The three types of load hookup are diagrammed below. **Maximum continuous load** in any hookup is 150 mA (derate per data in *Specifications* section). **Q8562E emitter hookup:** +10 to 30V dc at terminal #1, dc common at terminal #2.

Standard Sinking (NPN) Hookup

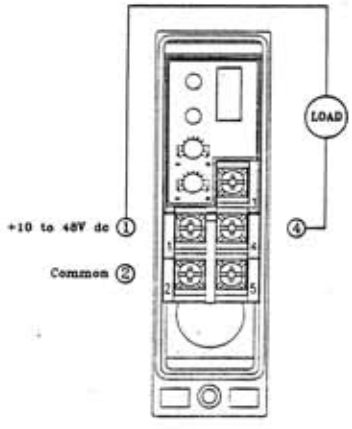

Connect dc power to the sensor at terminals #1 and #2. Power connections are reverse-polarity protected.

Connect the load between terminals #1 and #4.

Maximum continuous load is 150 mA.

Standard NPN and *standard* PNP hookups **may** be used simultaneously (maximum load is 150 mA each output).

Alternative Low Saturation Sinking (NPN) Hookup*

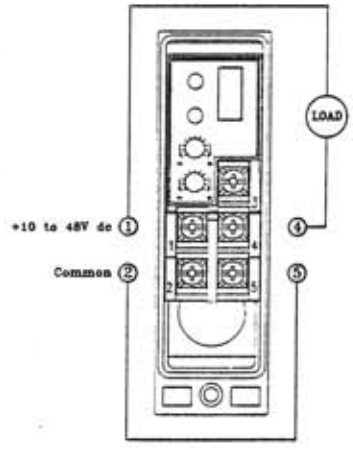

This hookup provides direct interfacing to TTL and similar circuits. Connect dc power at terminals #1 and #2. Power connections are reverse-polarity protected.

Connect the load between terminals #1 and #4. Connect a jumper between terminals #2 and #5. ***In this wiring configuration, the load hookup is NOT reverse-polarity protected. Double-check all wiring before applying power!**

Maximum continuous load is 150 mA.

Standard Sourcing (PNP) Hookup

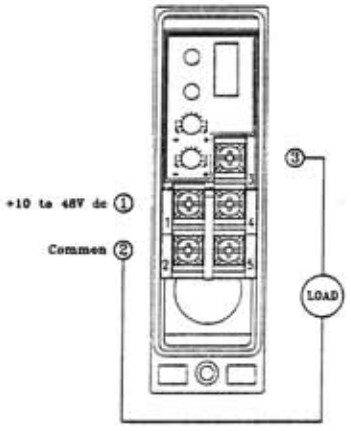

Connect dc power to the sensor at terminals #1 and #2. Power connections are reverse-polarity protected.

Connect the load between terminals #2 and #3.

Maximum continuous load is 150 mA.

Standard NPN and *standard* PNP hookups **may** be used simultaneously (maximum load is 150 mA each output).

Dimensions, Q85 Series sensors*

Top view

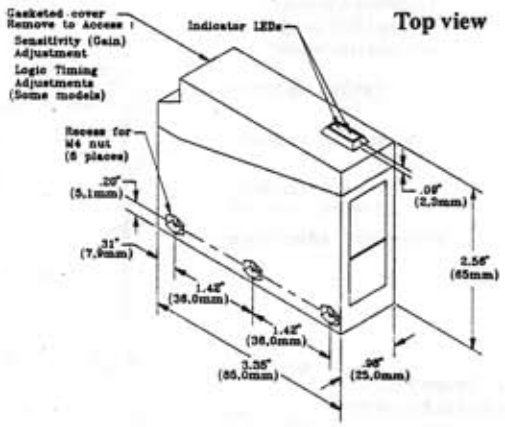

Bottom view

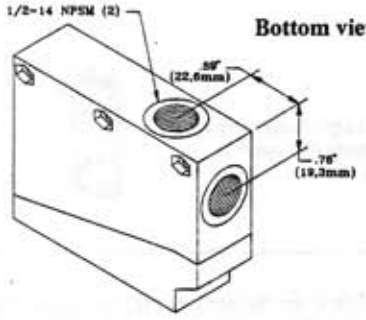

Shown with SMB85R mounting bracket (order separately)

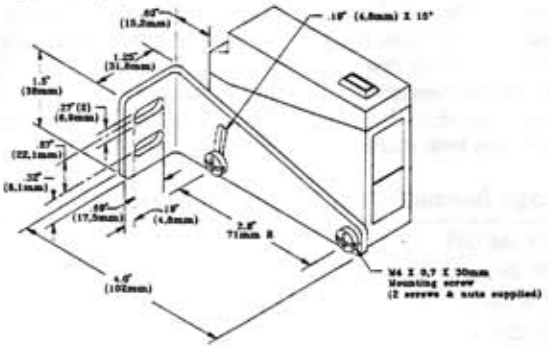

Shown with SMB85B mounting bracket (included)

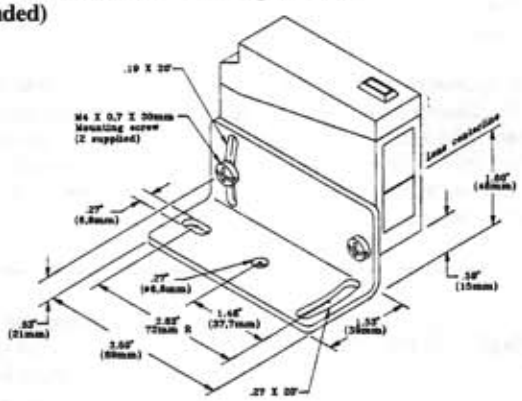

*Emitter units have same dimensions but no SENSITIVITY control, logic timing adjustments, or indicator LEDs.

WARRANTY: Banner Engineering Corporation warrants its products to be free from defects for one year. Banner Engineering Corporation will repair or replace, free of charge, any product of its manufacture found to be defective at the time it is returned to the factory during the warranty period. This warranty does not cover damage or liability for the improper application of Banner products. This warranty is in lieu of any other warranty either expressed or implied.

Banner Engineering Corp. 9714 10th Avenue No., Minneapolis, MN 55441 Telephone: (612) 544-3164 FAX (applications): (612) 544-3573