RP-RM83F Heavy-Duty Rope Pull Emergency Stop Switch

RP-RM83F Features

Rope pull switch with an emergency stop button for indoor or outdoor use



- Both safety contacts latch open when rope is pulled, broken, or if tension is reduced; requires manual reset (IEC 60947-5-5)
- Aluminum die-cast housing, rated IP67 and NEMA 4, suitable for demanding indoor and outdoor industrial environments
- Innovative RP-RM83F-..LT.. design provides quick, easy rope adjustment
- Rope spans up to 75 m (245 ft), depending on model
- Both safety contacts are closed with normal rope tension, and open when rope is pulled or if rope breaks (or if tension is reduced from normal amount)
- Both Monitoring contacts operate opposite the safety contacts for monitoring by another device
- Additional Aux. 24 V solid-state PNP output on some models provides remote rope tension monitoring
- Tension indicator window indicates proper rope tension for operation or safety contacts latched open (the rope pull or the E-stop button is actuated)

RP-RM83F Models

Model	Max. Rope Length	Rope Connection	Aux. Status Output	Run Position	Cable Pulled/ Cable Break	Switching Diagram
RP-RM83F-75LTE	75 m (245 ft)	Built-in Turnbuckle	Yes	Cable Run Position (All Models)		No PNP Aux. Output Models
RP-RM83F-75LRE		Ring		S1	S2	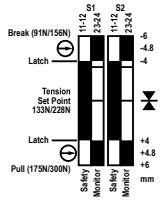
RP-RM83F-75LT		Built-in Turnbuckle	No	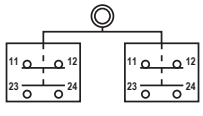		
RP-RM83F-75LR		Ring				
RP-RM83F-38LTE	37.5 m (123 ft)	Built-in Turnbuckle	Yes	Cable Pulled / Cable Break Position (All Models)		PNP Aux. Output Models
RP-RM83F-38LRE		Ring		S1	S2	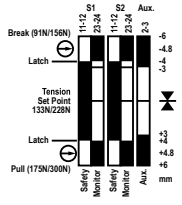
RP-RM83F-38LT		Built-in Turnbuckle	No	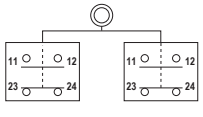		
RP-RM83F-38LR		Ring				

Contacts: ☐ Open ■ Closed

NOTE: This symbol ⊖ for a positive-opening safety contact (IEC 60947-5-1) is used in the switching diagram to identify the point in actuator travel where the normally-closed safety contact is fully open.

Important... Read This First

Regarding the Use of Rope Pull Switches. In the United States, the functions that Banner rope pull switches are intended to perform are regulated by the Occupational Safety and Health Administration (OSHA). Whether or not any particular rope pull switch installation meets all applicable OSHA requirements depends upon factors that are beyond the control of Banner Engineering Corp. These factors include the details of how the switches are applied, installed, wired, operated, and maintained.

Banner Engineering Corp. has attempted to provide complete application, installation, operation, and maintenance instructions in this document. Direct any questions regarding the use or installation of rope pull switches to the factory applications department.

© Banner Engineering Corp.

ПРОМЭЛЕКТРОНИКА/ sales@prom-elec.com

Banner Engineering Corp. recommends that rope pull switches be applied according to the guidelines set forth in the standards listed below. In addition, the user is responsible for ensuring all local, state, and national laws, rules, codes, and regulations relating to the use of Banner rope pull switches in each application are satisfied. Extreme care is urged that all legal requirements are met and that all installation and maintenance instructions are followed.

Applicable U.S. and International Standards (not all inclusive):

ANSI B11.0 Safety of Machinery, General Requirements, and Risk Assessment

Contact: Safety Director, AMT – The Association for Manufacturing Technology, 7901 Jones Branch Drive, Suite 900, McLean, VA 22102-4206 USA, www.amtonline.org

ANSI B11.19 Performance Criteria for Safeguarding

Contact: Safety Director, AMT – The Association for Manufacturing Technology, 7901 Jones Branch Drive, Suite 900, McLean, VA 22102-4206 USA, www.amtonline.org

NFPA 79 Electrical Standard for Industrial Machinery

Contact: National Fire Protection Association, 1 Batterymarch Park, Quincy, MA 02169-7471 USA, www.nfpa.org/

ANSI/RIA R15.06 Safety Requirements for Industrial Robots and Robot Systems

Contact: Robotic Industries Association, 900 Victors Way, Suite 140, Ann Arbor, MI 48108 USA, www.robotics.org

EN ISO 12100 Safety of Machinery – General Principles for Design — Risk Assessment and Risk Reduction

EN 60204-1 Electrical Equipment of Machines Part 1: General Requirements

ISO 13850 (EN 418) Emergency Stop Devices, Functional Aspects – Principles for Design

IEC 60947-5-5 Low Voltage Switchgear – Electrical Emergency Stop Device with Mechanical Latching Function

These and other standards are available from:

NSSN National Resource for Global Standards: www.nssn.org (Tel: 212-642-4980)
IHS Standards Store: www.global.ihs.com (Tel: 303-397-7956, 800-854-7179)
Document Center: www.document-center.com/home.cfm (Tel: 650-591-7600)

RP-RM83F Overview

Models RP-RM83F-.. are rope pull emergency stop switches in compact, heavy-duty die-cast aluminum housings, for indoor or outdoor use. When used with steel wire rope, they can provide emergency stop actuation along conveyors and similar machinery. Red PVC-covered 2, 3, 4, or 5 mm diameter wire rope is recommended, depending on model (force) and rope distance.

The switches have redundant contacts; terminals 11/12 are positive opening when there is a cable-pull or cable-brake situation. When used separately, these contacts provide inputs to a dual-channel safety module. Terminals 11/12 can also be used individually to provide single-channel switching or as a single-channel input to a safety module. Terminals 23/24 are for monitoring purposes only (closed in a cable-break/cable-pull situation).

When the rope is properly tensioned (228 or 133N, depending on model), the red arrows are centered under the hash mark on the tension indicator window, the contacts at terminals 11/12 are closed, and the contacts at terminals 23/24 are open. All models feature a “latching” operation. When the rope is pulled, the switch contacts 11/12 open and remain open until the built-in E-stop/reset button is manually reset.

These rope pull emergency stop switches are not generally considered safeguarding devices, in that they do not prevent or reduce exposure of individuals to a hazard. They provide the same function as other types of emergency stop switches.

WARNING:
- **Not a safeguarding device**
- Failure to follow these instructions could result in serious injury or death.
- This device is not considered a safeguarding device because it requires an overt action by an individual to stop machine motion or hazards. A safeguarding device limits or eliminates an individual's exposure to a hazard without action by the individual or others. This device cannot be substituted for required safeguarding. Refer to the applicable standards to determine those requirements.

WARNING:
- **Do not mute or bypass any emergency stop device**
- Muting or bypassing the safety outputs renders the emergency stop function ineffective.
- ANSI B11.19, NFPA 79 and IEC/EN 60204-1 require that the emergency stop function remains active at all times.

© Banner Engineering Corp. All rights reserved.

Run Condition (Proper Rope Tension) - Contacts 11/12 Closed

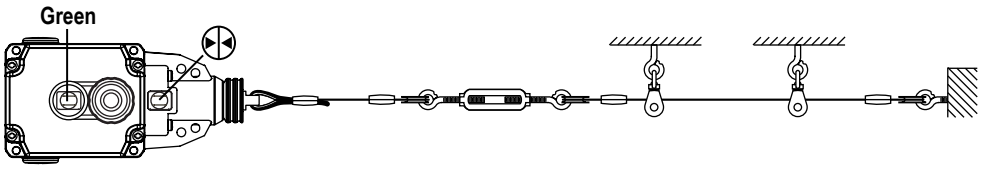

Rope Pulled Condition - Contacts 11/12 Open

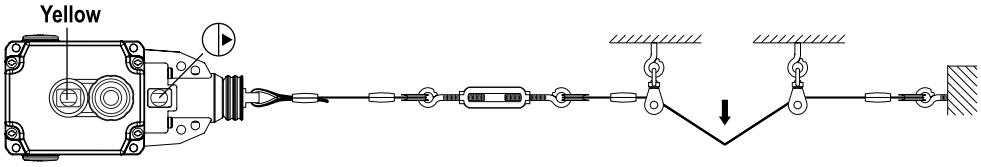

Rope Break Condition - Contacts 11/12 Open

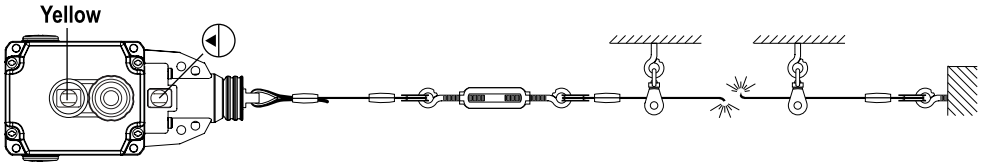

RP-RM83F Mechanical Installation

- The rope should be easily accessible and visible along its entire length. Markers or flags may be fixed on the rope to increase its visibility
- Switch body, anchor mounts and wire rope supports (pulleys or eye bolts) must be rigid and secure
- Although pulleys are preferred, a combination of pulleys and/or eye bolts are required to support the wire rope along its length. When pulled, the wire rope, should move freely through the pulleys or eye bolts to actuate the switch
- Use only pulleys (not eye bolts) when routing the rope around a corner or whenever direction changes, even slightly
- Never run rope through conduit or other tubing
- Never attach weights to the rope
- Temperature affects rope tension. The rope expands (lengthens) when temperature increases, and contracts (shrinks) when temperature decreases. Significant temperature variations require frequent checks of the tension adjustment
- Do not exceed the maximum specified total rope length. Banner offers models for other spans; contact Banner Engineering or visit www.bannerengineering.com for model selection

WARNING:
- Failure to use pulleys or eye bolts to support the wire rope may damage the switch.
- **Damaging the switch may create a dangerous situation that could lead to serious injury or death.**
- Use pulleys or eye bolts to support the wire rope to avoid damaging the switch.

NOTE: A tensioning spring is required to ensure compliance with the direction-independent actuation of the wire rope.

Follow these steps to install the switch.

1. Mount the switch securely on a solid stationary surface.
2. Fasten an eye bolt at the opposite end of the rope span from the switch. Verify that the anchor for the eye bolt is solid and stationary to withstand the constant tension and possible pull of the rope.
3. Assemble the rope as shown. Keep the rope's PVC cover intact along its complete length.
4. Use pulleys (recommended) or eye bolts at each support point. Always use a pulley when routing the rope around a corner, regardless of the angle.

© Banner Engineering Corp. All rights reserved.

Assembly of Rope and Hardware

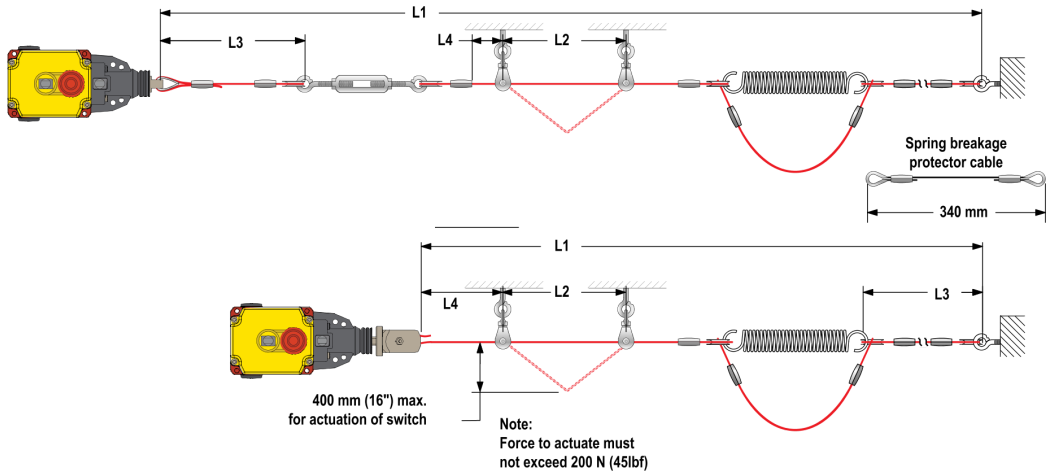

Switch Model	Max. Total Length L1	Max. Distance Between Pulleys L2	Max. Distance to Spring/ Turnbuckle L3 (1)	Min. Distance Fitting to Pulley L4 (2)
75 m	75 m (245 ft)	3-5 m (10-15 ft)	150 mm (6 in)	150 mm (6 in)
38 m	37.5 m (123 ft)			

All hardware is supplied by the user. See "RP-RM83F Dimensions" on page 7 for switch mounting hole mounting pattern and size.

Installing Models RP-RM83F-..75 and RP-LS42F-xxLF (with Integral Turnbuckle)

These models have their own integral turnbuckle and clamp to tension the rope and to hold it in place. This innovative design provides for quick and easy rope fixing and tensioning. These models require no external turnbuckle or any additional clamp at the switch end of the rope.

To install the rope at the switch end:

1. Strip away several inches of the cable covering.
2. Loosen the set screw on the switch fitting using a 4 mm hex wrench.
3. Insert the cable into the center hole, and pull the cut end out from the side hole.
4. When the tension is correct, tighten the set screw to hold the rope firmly in place.

Tightening the rope into the internal turnbuckle (models RP-RM83F-..LT and -..LTE)



Tensioning the Rope

After the rope span components are installed, apply tension to the rope until the arrows in the tensioning indicator are centered on the line in the tension indicator window. This indicates sufficient rope tension. (Contacts 11/12 will close.)

1. For models RP-RM83F-..LT and RP-RM83F-..LTE: Turn the external turnbuckle until the arrows are centered. For models RP-RM83F-..LR and RP-RM83F-..LRE: Turn the shaft of the switch using a 17 mm wrench as shown, until the arrows are centered.
2. Pull hard on the rope and reset the latch several times. If the arrows in the tensioning indicator window do not return to the correct position (centered on the line in the window), further tighten or loosen the rope tension as needed, then reset, until proper tension is shown.
3. Check the tension adjustment periodically to ensure proper operation.

(1) Closer, if possible
(2) Distance must allow necessary clearance to all mounting hardware.

© Banner Engineering Corp. All rights reserved.

Tension Indicator Window: too little tension shown

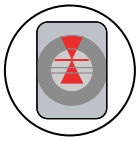

Tension Indicator Window: proper tension shown

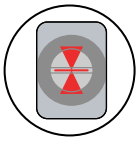

Adjusting rope tension (models RP-RM83F-..LT and-..LTE)



RP-RM83F Electrical Installation

Accessing the Wiring Chamber

Access the wiring chamber by loosening the four corner screws to remove the front cover. Select the best wiring entrance and thread in the ½" x 14 NPSM conduit adapter (supplied), or the optional M20 x 1.5 cable gland (see Accessories). Wire the two switch contacts in series or independently.

Single-Channel Connection

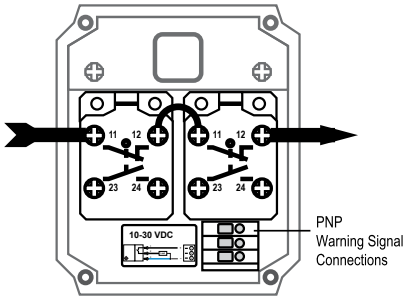

Dual-Channel Connection

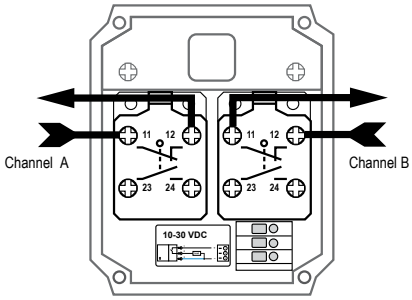

WARNING:

- **Risk of electric shock**
- Use extreme caution to avoid electrical shock. Serious injury or death could result.
- Always disconnect power from the safety system (for example, device, module, interfacing, etc.), guarded machine, and/or the machine being controlled before making any connections or replacing any component. Lockout/tagout procedures might be required. Refer to OSHA 29CFR1910.147, ANSI Z244-1, or the applicable standard for controlling hazardous energy.
- Make no more connections to the device or system than are described in this manual. Electrical installation and wiring must be made by a Qualified Person[1] and must comply with the applicable electrical standards and wiring codes, such as the NEC (National Electrical Code), NFPA 79, or IEC 60204-1, and all applicable local standards and codes.

Wiring

These switch models have redundant pairs of safety contacts, so they may be wired for either single-channel or dual-channel output to a safety module or E-stop circuit. Monitor contacts may be wired as desired to an external alarm device.

NOTE:

- **Proper Wiring**
- Do not operate the rope pull without properly closing the cover.
- The maximum tightening torque of the contact screws is 0.8 N·m; do not over-tighten. Before closing the front cover, verify that no wires are trapped.

[1] A person who, by possession of a recognized degree or certificate of professional training, or who, by extensive knowledge, training and experience, has successfully demonstrated the ability to solve problems relating to the subject matter and work.

© Banner Engineering Corp. All rights reserved.

Single-Channel Output: Wire contacts 11/12 together in series to the input of a safety module or E-stop circuit.

Dual-Channel Output: Wire contacts 11/12 independently to the two safety module inputs.

Warning Signal. Switch models RP-RM83F-...E provide a 24 V dc solid-state “warning signal” output, which signals when the rope tension is either too high or too low, before the safety contacts open and the switch latches OFF. This solid-state switch is located inside the wiring chamber next to the safety output contacts.

Warning Signal Electrical Connections

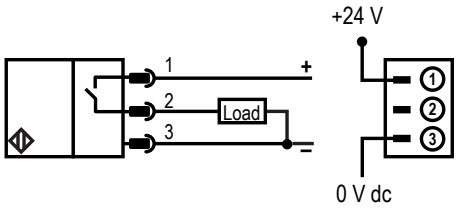

Manual/Latch Reset

E-Stop and Latch Reset. Following the rope pulling/breaking or the E-stop button being pressed, the latch must be manually reset. The E-stop can be reset only when proper tension is indicated. Pull the red E-stop button until the switch Status indicator changes from Yellow to Green and the latch makes an audible “click,” indicating that the latch has been reset.

NOTE: Proper rope tension must be displayed before the latch can be reset.

Resetting the Latch

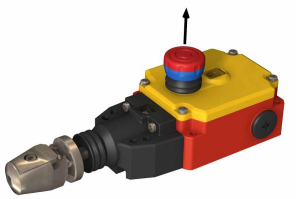

Maintenance/Checkout

At switch installation or replacement and at machine set up, a Designated Person[(1)] must test each switch for proper machine shutdown response and check the switch(es) and installation for proper operation, physical damage, mounting (looseness), and excessive environmental contamination. This must also take place on a periodic schedule determined by the user, based on the severity of the operating environment and the frequency of switch actuations. This is generally determined by a risk assessment, such as the one contained in ANSI B11.0. Adjust, repair, or replace components as needed. If inspection reveals contamination on the switch, thoroughly clean the switch and eliminate the cause of the contamination. Replace the switch and/or appropriate components when any parts or assemblies are damaged, broken, deformed, or badly worn; or if the electrical/mechanical specifications (for the environment and operating conditions) have been exceeded. Always test the control system for proper functioning under machine control conditions after performing maintenance, replacing the switch, or replacing any component of the switch.

Additional items that should be included in the checkout and/or regularly scheduled maintenance of a rope pull system:

- Check for proper rope tension and adjust as needed
- Verify free operation (no binding) of the rope and proper tripping when the rope is pulled
- Periodically lubricate the pulleys and other moving parts associated with the rope
- Repair any loose or damaged hardware, worn/frayed rope (cable), missing red rope sheathing or flags/markers (if used)
- Remove or clean off any contamination and eliminate its cause

RP-RM83F Specifications

Contact Rating

10 A at 24 V AC
10 A at 110 V AC
6 A at 230 V AC
6 A at 24 V DC
2.5 kV maximum transient tolerance
NEMA A300 (same polarity)

Monitoring Solid-State Output Rating

Rated operational voltage: U_e = 10 to 30 V DC
Rated operational current: = 50 mA
Utilization category: DC13
Protected against reverse polarity and short circuit

Wire Connections

Screw terminals with pressure plates accept the following wire sizes:

Stranded and solid: 20 AWG (0.5 mm^2) to 16 AWG (1.5 mm^2) for one wire

Mechanical Life

100,000 operations per IEC 60947-5-5

Cable Entry

M20 × 1.5 threaded entrance. Adapter supplied to convert M20 x 1.5 to ½"-14 NPT threaded entrance

(1) A Designated Person is identified in writing by the employer as being appropriately trained to perform a specified checkout procedure.

© Banner Engineering Corp. All rights reserved.

European Rating

Rated Isolation Voltage (Ui): 250 V

Rated Impulse Without Voltage (Uimp): 2.5 kV

Conventional Thermal Current (Ithe): 10 A

Utilization Category

Protection Class I

AC-15, U_e/I_e 240 V/3 A; 120 V/6 A

DC-13, U_e/I_e 250 V/0.27 A; 125 V/0.55 A

Protection Class III

AC-15, U_e/I_e 50 V/6 A

DC-13, U_e/I_e 120 V/0.55 A

Contact Material

Silver-nickel allow

Maximum Switching Speed

20 operations per minute

Recommended Rope Size

Accommodates rope sizes 2 to 5 mm diameter steel rope (see Accessories); select rope diameter based on switch model and rope length

75 m models: recommended 2 to 5 mm diameters

38 m models: recommended 2 to 5 mm diameters

Short Circuit Protection

6 A DII gG Fuse

Recommended external fusing or overload protection.

B10d

2×10^5 cycles at DC-13; 24 V; I_{e2} = 0.1 A

Construction

Die-cast aluminum housing; zinc die-cast actuator

Maximum Rope Pull Length

75 m (245 ft) or 37.5 m (123 ft), depending on model

Environmental Rating

NEMA 4, IEC IP67, per IEC/EN 60529

Operating Conditions

–30 °C to +80 °C (–22 °F to +176 °F)

Weight

RP-RM83F-..LT and -..LTE: 1Kg (2.1 lbs.)

RP-RM83F-..LR and -..LRE: 0.77 Kg (1.6 lbs.)

Product Performance Standards

DIN EN 60947-1, DIN EN 60947-5-1, DIN EN 60947-5-5, IEC 60947-1, IEC 60947-5-1, IEC 60947-5-5, ISO 13850

Certifications

Banner Engineering BV
Park Lane, Culliganlaan 2F bus 3
1831 Diegem, BELGIUM

Turck Banner LTD Blenheim House
Blenheim Court
Wickford, Essex SS11 8YT
GREAT BRITAIN

拉线开关 型号 RP-RM83F系列
标准 GB/T 14048.5
美国邦纳工程公司, 德国制造

RP-RM83F Dimensions

RP-RM83F-..LR..

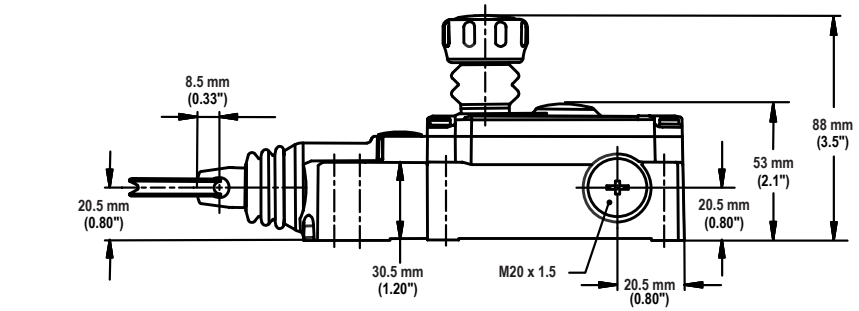

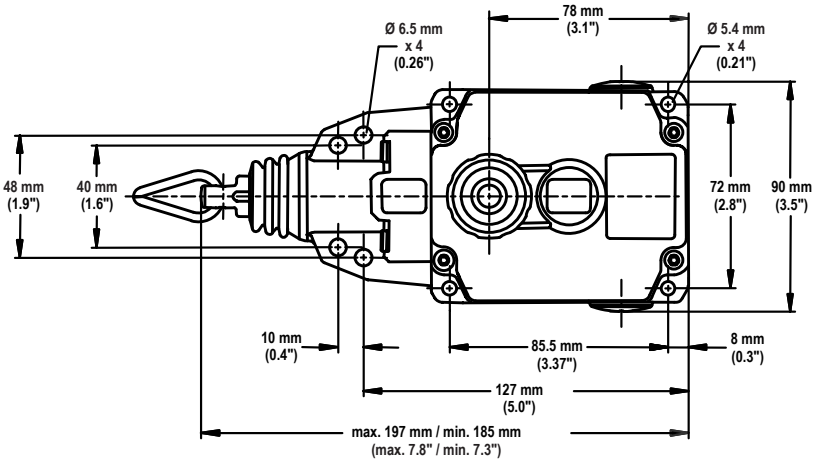

© Banner Engineering Corp. All rights reserved.

RP-RM83F-..LT..

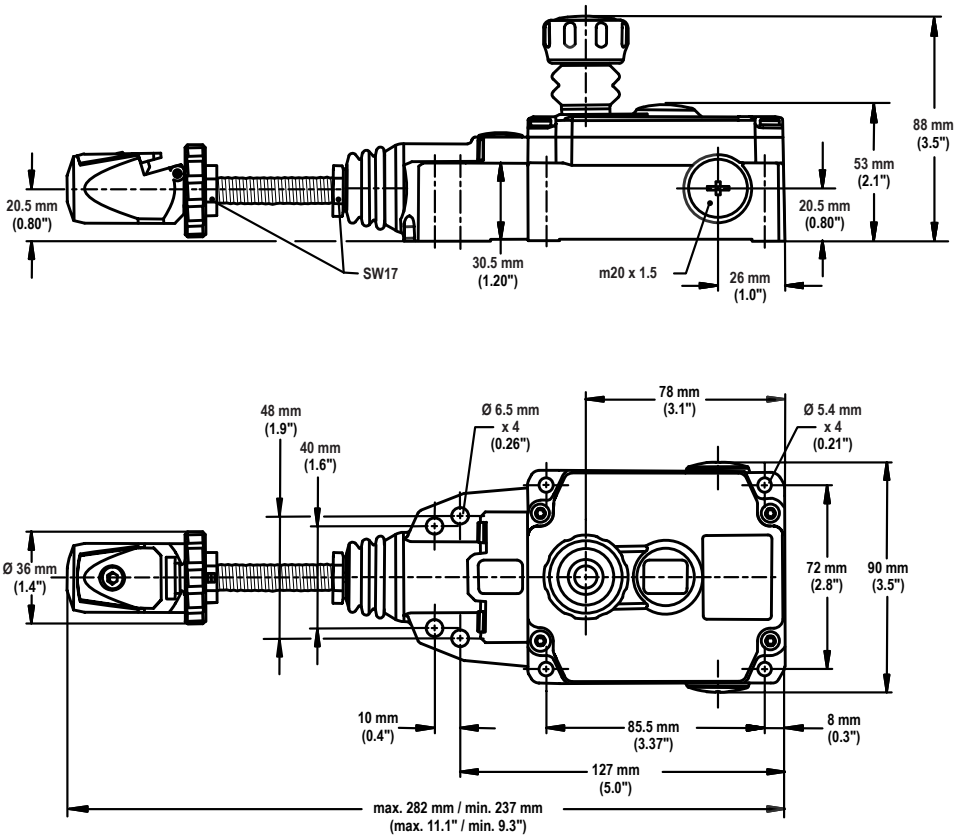

Accessories

Wire Rope Assembly Components

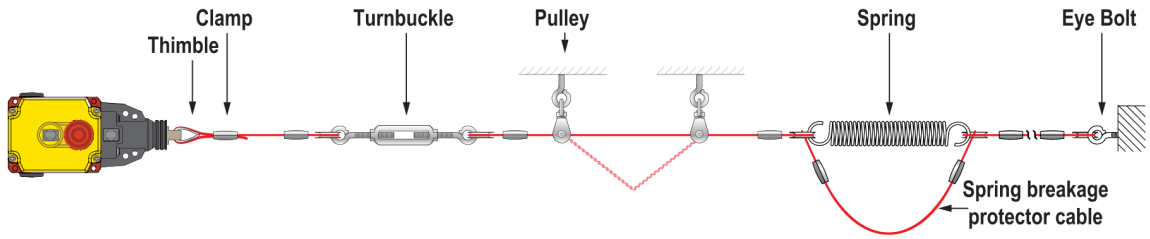

Hardware kits are available that contain the appropriate quantity of hardware for a given length of steel rope (including the rope). Search www.bannerengineering.com for **RPAK** to find the desired hardware kit.

Model	Length	Description	Wire Rope
RPA-C1-10	10 m (32.8 ft)	2 mm steel wire rope with 0.5 mm red PVC jacket (unterminated)	
RPA-C1-20	20 m (65.6 ft)		
RPA-C1-100	100 m (328.1 ft)		

Model	Length	Description	Wire Rope
RPA-C2-10	10 m (32.8 ft)	3 mm steel wire rope with 0.5 mm red PVC jacket (unterminated)	
RPA-C2-20	20 m (65.6 ft)		
RPA-C2-40	40 m (131.2 ft)		
RPA-C2-50	50 m (164.0 ft)		
RPA-C2-80	80 m (262.4 ft)		

© Banner Engineering Corp. All rights reserved.

Model	Length	Description	Wire Rope
RPA-C3-20	20 m (65.6 ft)	4 mm steel wire rope with 0.5 mm red PVC jacket (unterminated)	
RPA-C3-100	100 m (328.1 ft)		

Model	Quantity	Description	Thimble
RPA-T1-4	4	Thimble for 2 mm wire rope	
RPA-T2-4	4	Thimble for 3 mm wire rope	
RPA-T3-4	4	Thimble for 4 mm wire rope	

Model	Quantity	Description	Clamp
RPA-CC1-4	4	Clamp for 2 mm wire rope	
RPA-CC2-4	4	Clamp for 3 mm wire rope	
RPA-CC3-4	4	Clamp for 4 mm wire rope	

Model	Quantity	Description	Turnbuckle
RPA-TA1-1	1	#4 Turnbuckle	

Model	Quantity	Description	Eye Bolt
RPA-EB1-1	1	¼ in -20 Eye bolt (3 in bolt shaft)	

Model	Quantity	Description	Eye Bolt
RPA-EB2-1	1	5/16 in-18 Eye bolt (3 in bolt shaft)	

Model	Quantity	Description	Pulley
RPA-P1-1	1	Hanging pulley for in-line use	
RPA-DP1-1	1	Right-angle mount deflection pulley for corner turns (90° to 180°)	

Model	Quantity	Description	Tensioning Spring	Used With
RPA-S3-1	1	Tensioning spring #3		RP-LM40D-6RP-LM40D-6LRP-RM83F-..75..
RPA-S5-1	1	Tensioning spring #5		RP-RM83 models (38 m)RP-LS42 models (25 & 38 m)

Model	Quantity	Description	Tensioning Spring	Used With
RPA-S4-1	1	Tensioning spring #4 with built-in eye bolt (used with customer-supplied M12 × 1.75 pitch nut), cable thimble, clamping, tensioning, and overload protection.		RP-LM40D-6RP-LM40D-6LRP-RM83F-..75..
RPA-S6-1	1	Tensioning spring #6 with built-in eye bolt (used with customer-supplied M12 × 1.75 pitch nut), cable thimble, clamping, tensioning, and overload protection.		RP-RM83F-..38..

© Banner Engineering Corp. All rights reserved.

Model	Size	For Cable Diameter	Dimensions	Used With
SI-QM-CGM20	M20 × 1.5 Metal	5.0 to 12.0 mm (0.20 to 0.47 inches)	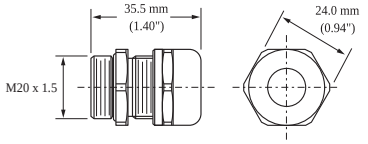	RP-RM83 Rope Pull SwitchRP-LM40 Rope Pull SwitchRP-QM72/QMT72 Rope Pull SwitchRP-QM90 Rope Pull SwitchSI-LM40 Safety Interlock Switch

Model	Size	Thread Conversion	Dimensions	Used With
SI-QM-M20	½ in-14 NPT Metal	M20 × 1.5 to ½ in-14 NPT	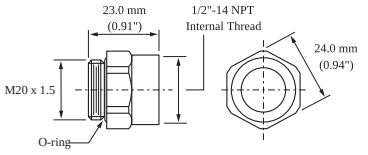	SI-LM40 Safety Interlock SwitchesRP-LM40 Rope Pull SwitchesRP-QM72/QMT72 Rope Pull SwitchesRP-QM90 Rope Pull SwitchesRP-RM83 Rope Pull Switches

Product Support and Maintenance

Repairs and Translations

Obtain assistance with product repairs by contacting your local Banner Engineering Corp distributor or by calling Banner directly at (763) 544-3164. Access literature translated into your native language on the Banner website at www.bannerengineering.com or contact Banner directly at (763) 544-3164.

Para reparaciones de productos, por favor contacte a su distribuidor local de Banner Engineering o llame a Banner directamente al 00 1 (763) 544-3164. Vea la literatura traducida en su idioma en el sitio web Banner en www.bannerengineering.com o comuníquese con Banner directamente al 00 1 (763) 544-3164.

Pour vous aider lors de la réparation de produits, contactez votre distributeur Banner local our appelez directement Banner au (763) 544-3164. La documentation traduite dans votre langue est disponible sur le site internet de Banner www.bannerengineering.com ou contactez directement Banner au (763) 544-3164.

请联系当地的 Banner Engineering Corp 经销商或直接致电 Banner +1 (763) 544-3164，以获得产品维修帮助。请访问邦纳网站 www.bannerengineering.com 或直接拨打 +1 (763) 544-3164 联系邦纳，获取翻译成您母语的资料。

EU/UK Declaration of Conformity (DoC)

Banner Engineering Corp. herewith declares that these products are in conformity with the provisions of the listed directives and all essential health and safety requirements have been met. For the complete DoC, please go to www.bannerengineering.com.

Product	Directive
RP-RM83F Heavy-Duty Rope Pull Emergency Stop Switch	EU: Machinery Directive 2006/42/EC
	UKCA: Machinery (Safety) Regulation 2008

Representative in EU: Spiros Lachandidis, Managing Director, **Banner Engineering BV** Park Lane | Culliganlaan 2F bus 3 | 1831 Diegem, BELGIUM

Representative in UK: Tony Coghlan, Managing Director, **Turck Banner LTD** Blenheim House | Blenheim Court | Wickford, Essex SS11 8YT | Great Britain

Banner Engineering Corp Limited Warranty

Banner Engineering Corp. warrants its products to be free from defects in material and workmanship for one year following the date of shipment. Banner Engineering Corp. will repair or replace, free of charge, any product of its manufacture which, at the time it is returned to the factory, is found to have been defective during the warranty period. This warranty does not cover damage or liability for misuse, abuse, or the improper application or installation of the Banner product.

THIS LIMITED WARRANTY IS EXCLUSIVE AND IN LIEU OF ALL OTHER WARRANTIES WHETHER EXPRESS OR IMPLIED (INCLUDING, WITHOUT LIMITATION, ANY WARRANTY OF MERCHANTABILITY OR FITNESS FOR A PARTICULAR PURPOSE), AND WHETHER ARISING UNDER COURSE OF PERFORMANCE, COURSE OF DEALING OR TRADE USAGE.

This Warranty is exclusive and limited to repair or, at the discretion of Banner Engineering Corp., replacement. **IN NO EVENT SHALL BANNER ENGINEERING CORP. BE LIABLE TO BUYER OR ANY OTHER PERSON OR ENTITY FOR ANY EXTRA COSTS, EXPENSES, LOSSES, LOSS OF PROFITS, OR ANY INCIDENTAL, CONSEQUENTIAL OR SPECIAL DAMAGES RESULTING FROM ANY PRODUCT**

© Banner Engineering Corp. All rights reserved.

DEFECT OR FROM THE USE OR INABILITY TO USE THE PRODUCT, WHETHER ARISING IN CONTRACT OR WARRANTY, STATUTE, TORT, STRICT LIABILITY, NEGLIGENCE, OR OTHERWISE.

Banner Engineering Corp. reserves the right to change, modify or improve the design of the product without assuming any obligations or liabilities relating to any product previously manufactured by Banner Engineering Corp. Any misuse, abuse, or improper application or installation of this product or use of the product for personal protection applications when the product is identified as not intended for such purposes will void the product warranty. Any modifications to this product without prior express approval by Banner Engineering Corp will void the product warranties. All specifications published in this document are subject to change; Banner reserves the right to modify product specifications or update documentation at any time. Specifications and product information in English supersede that which is provided in any other language. For the most recent version of any documentation, refer to: www.bannerengineering.com.

For patent information, see www.bannerengineering.com/patents.

Document title: RP-RM83F Heavy-Duty Rope Pull Emergency Stop Switch
Part number: 141245
Revision: G
Original Instructions
© Banner Engineering Corp. All rights reserved.

141245

© Banner Engineering Corp. All rights reserved.