Quick Start Guide for Wireless Q45 Sensor Networks Formed Using the -QC Gateway

Each sensor is mapped to the one of the Gateway's outputs by default. Other mapping options are also supported.

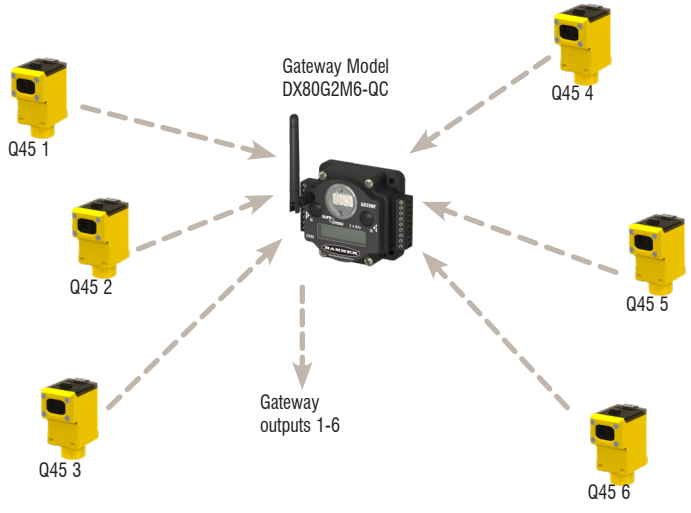

Each wireless network may have up to six Wireless Q45 Sensor optical models (default configuration) when using the DX80G2M6S-Q Gateway's DIP switch-based mapping.

Each Wireless Q45 Sensor is mapped to one of the Gateway's six discrete outputs.

Step 1: Wire the Gateway's Outputs

To wire the Gateway's outputs:

1. Remove the four screws holding the radio cover to the housing base.
2. Wire your outputs according to your network's configuration.

For additional configuration and Gateway wiring options, refer to the *Gateway with Switch Mapping* datasheet, part number 161862. To use more than six sensors (up to 47) in the wireless network, use a Modbus host system (see the *Host Configuration* manual, Banner p/n 134112).

Use this wiring diagram for the default configuration for Optical Sensor Models: six Q45 Sensors mapped to the six Gateway outputs.

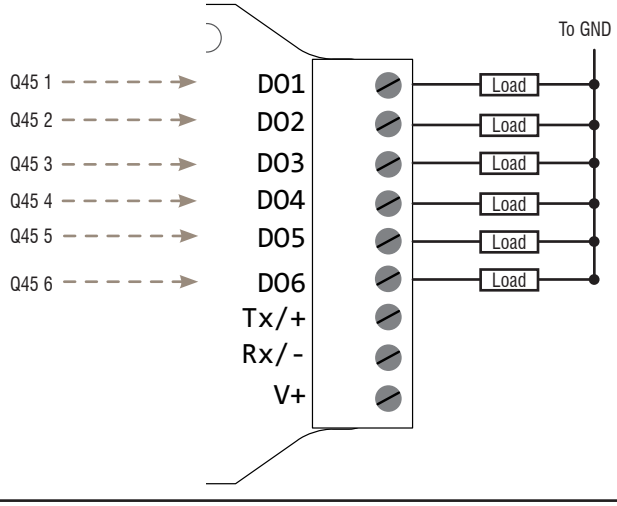

159359

Printed in USA May 2012 P/N 159359 rev. A

ПРОМЭЛЕКТРОНИКА/ sales@prom-elec.com

Step 2: Apply Power

Apply Power to the Gateway

	Wire Color	Gateway
V+	Brown	+10 to 30V dc Input
V–	Blue	dc common (GND)

Connecting dc power to the communication pins will cause permanent damage.

Turn on the Wireless Q45 Sensor

To conserve battery power, the Wireless Q45 Sensor ships from the factory in storage mode. To wake the Q45:

1. Loosen the clamp plate on the top of the Wireless Q45 Sensor and lift the cover.
2. Press and hold the button for five seconds. When the Q45 is on, the red LED flashes.

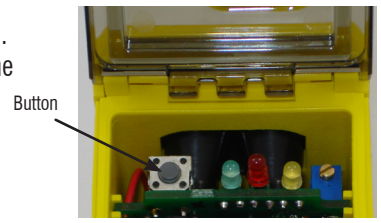

Step 3: Bind the Wireless Q45 Sensors to the Gateway

Binding Wireless Q45 Sensors to their Gateway ensures the Q45s only exchange data with the Gateway they are bound to. To create your network, bind the Wireless Q45 Sensors to the Gateway and assign them a unique Node address.



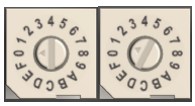

1. On the Gateway, triple-click button 2. Both LEDs flash red.
2. On the Gateway, use both rotary dials to assign the Node address for the Q45. Use the left dial for the left digit and the right dial for the right digit. For example, to assign your Q45 to Node 01, set the left dial to 0 and the right dial to 1. The Gateway's LCD displays BINDING and NOD 1. (When using the default Gateway DIP switch positions, only Nodes 01, 02, and 03 will be mapped to the Gateway's outputs.)
3. On the Wireless Q45 Sensor, triple-click the button. While in binding mode, the red and green LEDs flash alternately. After the Q45 is bound, the LEDs flash together four times. The Q45 automatically exits binding mode.
4. Label the sensor with the Q45's Node address.
5. Repeat steps 2 through 4 for as many Wireless Q45 Sensors as are needed for your network.
6. On the Gateway, single-click button 2 to exit binding mode.

Step 4: Verify Radio Communication

To verify the Gateway and Wireless Q45 Sensor are communicating:

- Gateway's LED 1 is solid green.
- Until communication is established with the Gateway, the Q45's red LED flashes.
- After communication is established, the Q45's green LED flashes.

Step 5: Test the Wireless Q45 Sensor Operation

Mount the Wireless Q45 Sensor in your application and view the yellow LED, which indicates the sensor's output.

After 15 minutes of inactivity, the LED turns off to conserve power. To activate the LED, push the button once.

For alignment instructions, refer to the Wireless Q45 Sensor's datasheet.

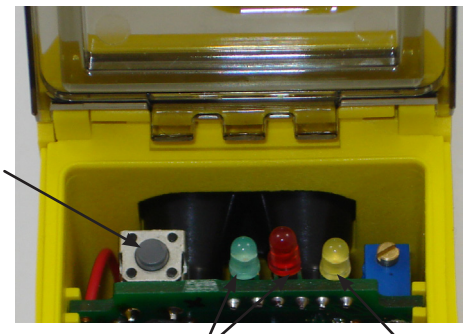

Banner Engineering Corp. • Minneapolis, MN U.S.A
www.bannerengineering.com • Tel: 763.544.3164