Model SIM-525T Sensor Interface Module

Power Supply for use with 12-30V dc Sensors

For the latest technical information about this product, including specifications, dimensions, and wiring, see *www.BannerEngineering.com*



- Simple DIN-rail mount
- Indicators for Power ON and Output Active
- Includes sensor TEACH push button
- Additional terminals provide in-situ data collection for some sensors

Overview

The SIM-525T is a passive DIN-rail-mountable module that allows additional status indicators to be located in the user's control cabinet. It also provides a Remote TEACH push button for interfacing to any Banner 5-wire *Expert* product.

It is designed to provide remote indication and Teach capability for Banner M-GAGE™ and T-GAGE® sensors, when their mounting does not allow easy access to the sensor (as when mounted underground or sealed in pavement, for example).

The module also features two separate "tie points" to allow for a sensor signal capture when using the Banner DPB1 Programming Box and sensor-specific monitor software. The tie points also can be used as a Teach input by the user's PLC.

Specifications

Supply Voltage
12 to 30V dc

Output Rating
100 mA

Environmental Rating
IP 00

Agency Approvals
Due to the device's passive nature, no approvals are planned

Dimensions

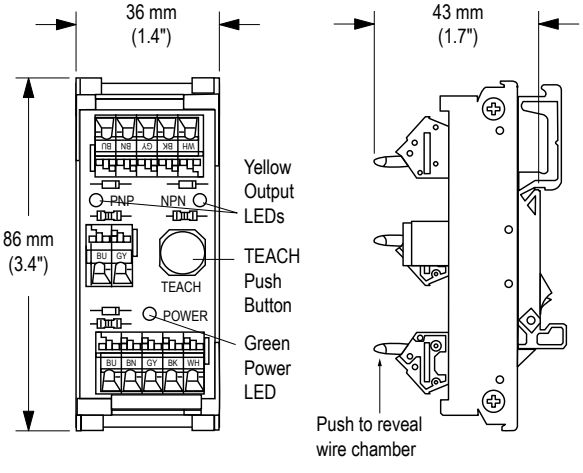

ПРОМЭЛЕКТРОНИКА/ sales@prom-elec.com

Typical Hookup

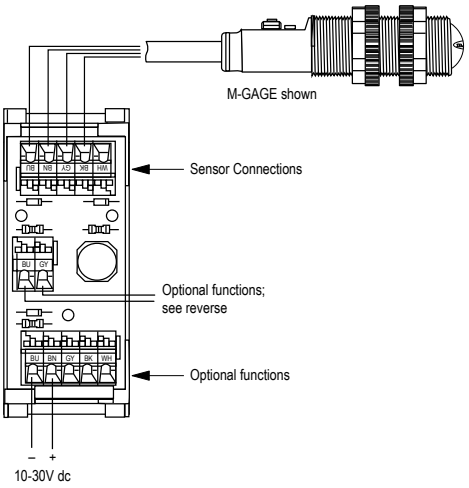

Additional Hookups

Typical Interface - M-GAGE in Pavement with PCL I/O

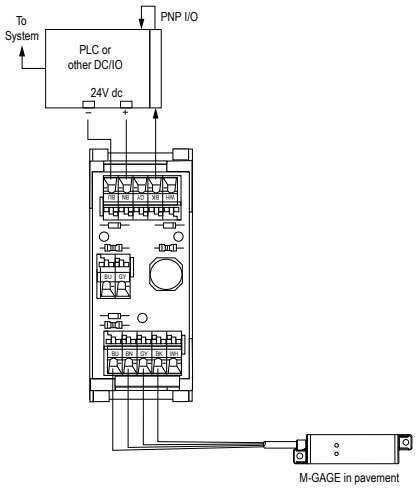

Typical Interface – With Banner *Expert* Sensor to provide Remote Teach Button*

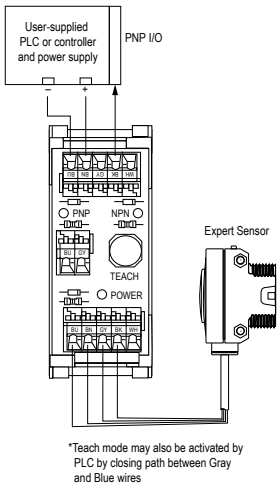

*Teach mode may also be activated by PLC by closing path between Gray and Blue wires

Typical Interface - To Timer or Relay

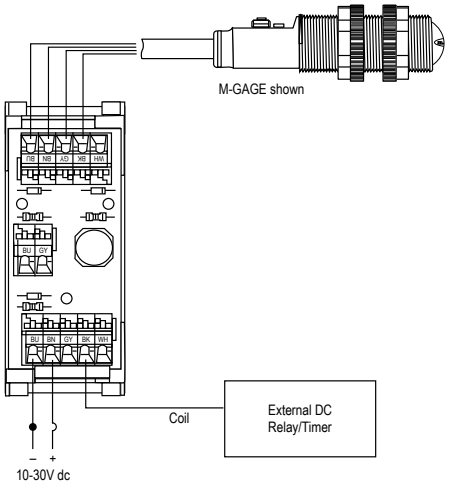

Optional Function – Data Capture; Monitor Software Interface with M-GAGE In-Situ

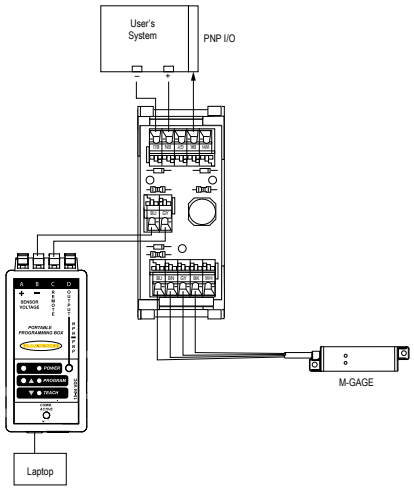

Advanced Hookup

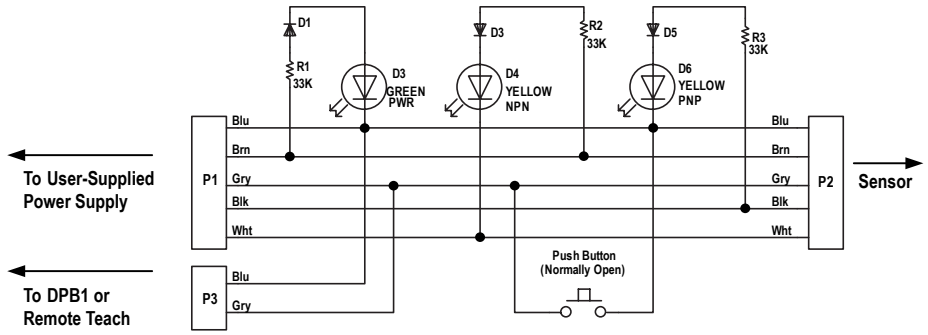

Color		Function
Blu	BLUE	0V DC COMMON
Brn	BROWN	+12V TO +30V DC
Gry	GRAY	TEACH
Blk	BLACK	PNP OUT
Wht	WHITE	NPN OUT

Banner Engineering Corp Limited Warranty

Banner Engineering Corp. warrants its products to be free from defects in material and workmanship for one year following the date of shipment. Banner Engineering Corp. will repair or replace, free of charge, any product of its manufacture which, at the time it is returned to the factory, is found to have been defective during the warranty period. This warranty does not cover damage or liability for misuse, abuse, or the improper application or installation of the Banner product.

THIS LIMITED WARRANTY IS EXCLUSIVE AND IN LIEU OF ALL OTHER WARRANTIES WHETHER EXPRESS OR IMPLIED (INCLUDING, WITHOUT LIMITATION, ANY WARRANTY OF MERCHANTABILITY OR FITNESS FOR A PARTICULAR PURPOSE), AND WHETHER ARISING UNDER COURSE OF PERFORMANCE, COURSE OF DEALING OR TRADE USAGE.

This Warranty is exclusive and limited to repair or, at the discretion of Banner Engineering Corp., replacement. **IN NO EVENT SHALL BANNER ENGINEERING CORP. BE LIABLE TO BUYER OR ANY OTHER PERSON OR ENTITY FOR ANY EXTRA COSTS, EXPENSES, LOSSES, LOSS OF PROFITS, OR ANY INCIDENTAL, CONSEQUENTIAL OR SPECIAL DAMAGES RESULTING FROM ANY PRODUCT DEFECT OR FROM THE USE OR INABILITY TO USE THE PRODUCT, WHETHER ARISING IN CONTRACT OR WARRANTY, STATUTE, TORT, STRICT LIABILITY, NEGLIGENCE, OR OTHERWISE.**

Banner Engineering Corp. reserves the right to change, modify or improve the design of the product without assuming any obligations or liabilities relating to any product previously manufactured by Banner Engineering Corp.