Features



Class 1 and 2 lasers for use with Banner modulated photoelectric receivers.

- Self-contained Class 1 or Class 2 modulated visible laser diode emitters permit higher gain than LEDs and extended range in opposed-mode sensing systems
- Narrow effective beam provides small-object detection and precise position control
- Bright spot and multiple shapes provide great visual marking of objects
- 10 V DC to 30 V DC operation
- Laser beam enabled by white wire (pin 2)

WARNING:

- **Do not use this device for personnel protection**
- Using this device for personnel protection could result in serious injury or death.
- This device does not include the self-checking redundant circuitry necessary to allow its use in personnel safety applications. A device failure or malfunction can cause either an energized (on) or de-energized (off) output condition.

Models

Models	Laser Class	Laser Spot Shape	Excess Gain at 15 m (50 ft) [1]	Typical Beam Size
QS186LE	Class 1	Small Spot	With receiver Q23SN6R: 7500	See "Typical Beam Size vs Distance (Class 1 Lasers)" on page 3.
			With receiver SM31RL: 340	
			With receiver QS18VN6R: 4500	
			With receiver VS3AN5R: 2100	
			With receiver VS2AN5R: 1100	
QS186LE10		Circle	-	
QS186LE11		Vertical Line	-	
QS186LE12		Horizontal Line	-	
QS186LE14		Cross	-	
QS186LE2	Class 2	Small Spot	With receiver Q23SN6R: 12200	See "Typical Beam Size vs Distance (Class 2 Lasers)" on page 4.
			With receiver SM31RL: 1200	
			With receiver QS18VN6R: 7000	
			With receiver VS3AN5R: 5500	
			With receiver VS2AN5R: 3600	
QS186LE210		Circle	-	
QS186LE211		Vertical Line	-	
QS186LE212		Horizontal Line	-	
QS186LE214		Cross	-	

Integral 2 m (6.5 ft) unterminated cable models are listed.

- To order the 150 mm (6 in) PVC cable model with a 4-pin M8 quick disconnect, add the suffix "Q" to the model number. For example, "QS18LEQ".
- To order the 4-pin M8 integral quick disconnect model, add the suffix "Q7" to the model number. For example, "QS18LEQ7".
- To order the 150 mm (6 in) PVC cable model with a 4-pin M12 quick disconnect, add the suffix "Q5" to the model number. For example, "QS18LEQ5".
- To order the 4-pin M12 integral quick disconnect model, add the suffix "Q8" to the model number. For example, "QS18LEQ8".
- Models with a quick disconnect require a mating cordset.

[1] Not recommended for dusty or dirty environments; the scattered light would greatly reduce the excess gain.

Original Instructions
04-May-26

© Banner Engineering Corp. All rights reserved.
www.bannerengineering.com

109415
p/n: 109415 Rev. L

ПРОМЭЛЕКТРОНИКА/ sales@prom-elec.com

The following models are no longer available for order but are still covered by the information in this document.

- Most of the "W/30" models with the 9 m (30 ft) PVC cables
- QS186LE12Q7
- QS186LE14Q7
- QS186LE2Q7
- QS186LE210Q7
- QS186LE211Q5
- QS186LE211Q7
- QS186LE212Q7
- QS186LE214Q7

Install the QS186LE

To mount the QS186LE into bracket models SMB18A or SMB46A, follow these steps.

1. Insert the laser emitter into the hole in the bracket.
2. Tighten the hex jam nut to the bracket until the emitter is held securely in place.
3. Mount the bracket using user-supplied screws or bolts. The SMB18A bracket uses M4 or #8 screws or bolts and the SMB46A bracket uses M5 or #10 screws or bolts.
4. Check the sensor alignment, see "Alignment" on page 2. If you are using the adjustable bracket (model SMB46A), tighten or loosen one or two of the precision alignment screws, using the supplied 2 mm Allen wrench, until the laser is accurately aligned.

Wiring Diagram

Quick disconnect wiring diagrams are functionally identical.

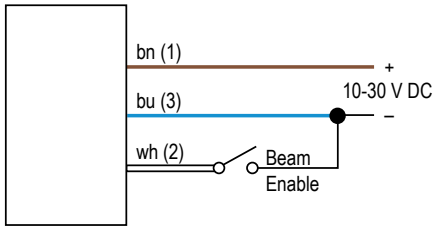

Key

1. Brown
2. White
3. Blue
4. Black (Not used)

Pinout

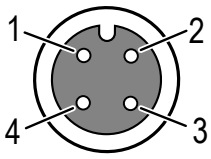

Alignment

Conventional modulated infrared LED photoelectric emitters are designed with beam divergence angles of several degrees. As a result, most emitters are easily aligned to their receivers by simple line-of-sight methods.

The beam widths listed (see "Figure: QS186LE Laser Emitter Beam Divergence at 25°C" on page 2) are also the effective beam sizes at the receiver for model QS186LE. The effective beam size is equal to the minimum opaque object profile required to block the laser beam. The beam size at the emitter is 2.5 mm (0.1 inches) diameter. Beam sizes at various distances for other models are shown in the tables below.

The effect of angular misalignment is dramatic (see "Figure: Beam Displacement per Degree of Misalignment" on page 3). The wide beam angles offered by conventional photoelectric emitters allow several degrees of misalignment between the optical axes of the emitter and receiver. This is not true for laser emitters, which require the beam center to directly strike the receiver lens. The figures show how far the laser beam will miss the center of the receiver lens for one degree of angular misalignment (in any plane). Note that even at a 5 foot range, one degree of misalignment will cause the laser beam to miss the lens of most receivers.

	Opposed Distance (X)	Beam Width (W)
QS186LE Laser Emitter Beam Divergence at 25°C 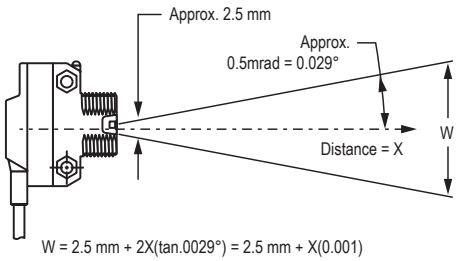 W = 2.5 mm + 2X(tan.0029°) = 2.5 mm + X(0.001)	1.5 m (5 ft)	3.5 mm (0.14 inches)
	3 m (10 ft)	5 mm (0.20 inches)
	6 m (20 ft)	7.5 mm (0.29 inches)
	15 m (50 ft)	16 mm (0.63 inches)
	30 m (100 ft)	26 mm (1.02 inches)

© Banner Engineering Corp. All rights reserved.
www.bannerengineering.com

Typical Beam Size vs Distance (Class 1 Lasers)

Typical Beam Size vs. Distance, Class 1 Lasers							
Small Spot (Model QS186LE)							
Distance	1.5 m (5 ft)	3 m (10 ft)	6 m (20 ft)	15 m (50 ft)	30 m (100 ft)	-	-
Spot Size	3.5 mm (0.14 in)	5 mm (0.2 in)	7.5 mm (0.29 in)	16 mm (0.63 in)	26 mm (1.02 in)	-	-
Circle (Model QS186LE10) [2]							
Distance	0.4 m (1.3 ft)	0.8 m (2.6 ft)	1 m (3.3 ft)	2 m (6.6 ft)	3 m (10 ft)	4 m (13 ft)	5 m (16 ft)
Circle Diameter	16 mm (0.63 in)	32 mm (1.26 in)	40 mm (1.57 in)	82 mm (3.23 in)	120 mm (4.72 in)	158 mm (6.22 in)	196 mm (7.72 in)
Vertical Line (Model QS186LE11) [3]							
Distance	0.2 m (0.6 ft)	0.4 m (1.3 ft)	0.6 m (1.9 ft)	0.8 m (2.6 ft)	1 m (3.3 ft)	1.5 m (5 ft)	2 m (6.6 ft)
Line Size	80 x 3 mm (3.1 x 0.1 in)	145 x 3 mm (5.7 x 0.1 in)	210 x 3 mm (8.3 x 0.1 in)	270 x 3 mm (10.6 x 0.1 in)	330 x 3 mm (13.0 x 0.1 in)	480 x 3 mm (18.9 x 0.1 in)	600 x 3 mm (23.6 x 0.1 in)
Horizontal Line (Model QS186LE12) [3]							
Distance	0.2 m (0.6 ft)	0.4 m (1.3 ft)	0.6 m (1.9 ft)	0.8 m (2.6 ft)	1 m (3.3 ft)	1.5 m (5 ft)	2 m (6.6 ft)
Line Size	95 x 2 mm (3.7 x 0.1 in)	175 x 2 mm (6.9 x 0.1 in)	252 x 2 mm (9.9 in x 0.1 in)	333 x 2.5 mm (13.1 x 0.1 in)	418 x 2.5 mm (16.5 x 0.1 in)	613 x 3 mm (24.1 x 0.1 in)	765 x 3 mm (30.1 x 0.1 in)
Cross (Model QS186LE14) [2]							
Distance	0.4 m (1.3 ft)	0.8 m (2.6 ft)	1 m (3.3 ft)	2 m (6.6 ft)	3 m (10 ft)	4 m (13 ft)	5 m (16 ft)
Line Size	60 mm (2.4 in)	125 mm (4.9 in)	155 mm (6.1 in)	310 mm (12.2 in)	460 mm (18.1 in)	615 mm (24.2 in)	760 mm (29.9 in)

Alignment Tip: The visible red beam of the laser emitter is easily seen in subdued lighting. At opposed distances of up to 10 feet, attach a sheet of white paper directly in front of the receiver lens and mark the location of the lens center on the paper. Using the mark as an aiming target, sight along the beam from directly behind the laser emitter. Adjust the emitter mounting until the dot of red light is centered exactly on the mark. Remove the paper and check the response of the receiver.
For longer distances (up to 25 feet), replace the white paper with a 4 x 4 inch square of high-grade retroreflective tape (Banner model BRT-THG-4X4-5 or equivalent; see "Figure: Long Distance Alignment" on page 3). For greater distances, use a larger sheet of retroreflective material (see "Retroreflective Tape" on page 8).

At long distances, use retroreflective tape to locate the beam at the desired location. Never use a mirror as an alignment target.

Long Distance Alignment

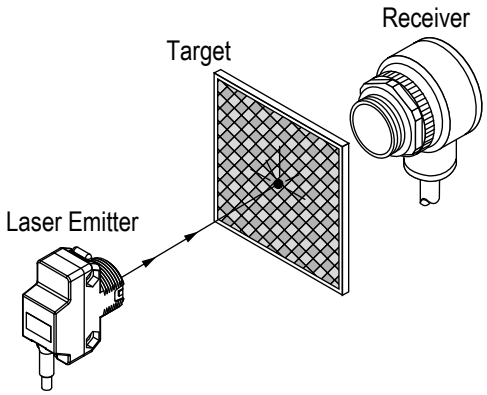

	Opposed Distance (X)	Beam Displacement (Y) for 1° of Misalignment
Beam Displacement per Degree of Misalignment 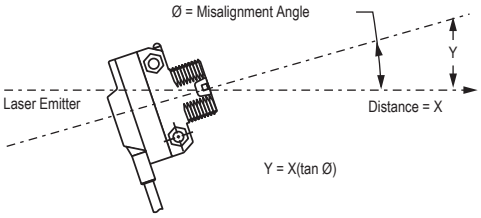 	1.5 m (5 ft)	25 mm (0.98 in)
	3 m (10 ft)	50 mm (1.96 in)
	6 m (20 ft)	100 mm (3.92 in)
	15 m (50 ft)	250 mm (9.84 in)
	30 m (100 ft)	500 mm (19.7 in)

[2] May contain a small collimated spot in the center of the pattern. For best focus, view circle at distances greater than 1 meter and cross at distances greater than 0.3 m (image is not crisp at closer distances).
[3] Light distribution is non-uniform, having less light at ends. The horizontal line is more uniform than the vertical line.

© Banner Engineering Corp. All rights reserved.
www.bannerengineering.com

Typical Beam Size vs Distance (Class 2 Lasers)

Typical Beam Size vs. Distance, Class 2 Lasers							
Small Spot (Model QS186LE2)							
Distance	1.5 m (5 ft)	3 m (10 ft)	6 m (20 ft)	15 m (50 ft)	30 m (100 ft)	-	-
Spot Size	3.8 mm (0.15 in)	5.1 mm (0.2 in)	10.2 mm (0.4 in)	17.8 mm (0.7 in)	30.5 mm (1.2 in)	-	-
Circle (Model QS186LE210) [4]							
Distance	0.4 m (1.3 ft)	0.8 m (2.6 ft)	1 m (3.3 ft)	2 m (6.6 ft)	3 m (10 ft)	4 m (13 ft)	5 m (16 ft)
Circle Diameter	17.8 mm (0.7 in)	33 mm (1.3 in)	41.9 mm (1.65 in)	82.3 mm (3.25 in)	122 mm (4.8 in)	160 mm (6.3 in)	198 mm (7.8 in)
Vertical Line (Model QS186LE211) [5]							
Distance	0.2 m (0.6 ft)	0.4 m (1.3 ft)	0.6 m (1.9 ft)	0.8 m (2.6 ft)	1 m (3.3 ft)	1.5 m (5 ft)	2 m (6.6 ft)
Line Size	72.1 x 2.5 mm (2.8 x 0.1 in)	150 x 2.5 mm (5.9 x 0.1 in)	208 x 2.5 mm (8.2 x 0.1 in)	284 x 2.5 mm (11.2 x 0.1 in)	350 x 2.5 mm (13.8 x 0.1 in)	502 x 2.5 mm (19.8 x 0.1 in)	660 x 2.5 mm (26 x 0.1 in)
Horizontal Line (Model QS186LE212) [5]							
Distance	0.2 m (0.6 ft)	0.4 m (1.3 ft)	0.6 m (1.9 ft)	0.8 m (2.6 ft)	1 m (3.3 ft)	1.5 m (5 ft)	2 m (6.6 ft)
Line Size	74 x 2.5 mm (2.9 x 0.1 in)	159 x 2.5 mm (6.25 x 0.1 in)	224 x 2.5 mm (8.8 in x 0.1 in)	330 x 2.5 mm (13 x 0.1 in)	406 x 2.5 mm (16 x 0.1 in)	610 x 2.5 mm (24 x 0.1 in)	800 x 2.5 mm (31.5 x 0.1 in)
Cross (Model QS186LE214) [4]							
Distance	0.4 m (1.3 ft)	0.8 m (2.6 ft)	1 m (3.3 ft)	2 m (6.6 ft)	3 m (10 ft)	4 m (13 ft)	5 m (16 ft)
Line Size	61 mm (2.4 in)	125 mm (4.9 in)	155 mm (6.1 in)	312 mm (12.3 in)	467 mm (18.4 in)	620 mm (24.4 in)	760 mm (29.9 in)

Specifications

Supply Voltage and Current

10 V DC to 30 V DC (10% maximum ripple) at less than 35 mA

Supply Protection Circuitry

Protected against reverse polarity

Sensing Beam (Class 1 Laser)

Visible red Class 1 laser (temperature coefficient 0.2 nm/ °C) (see "Class 1 Laser Description and Safety Information" on page 5)

Rep Rate: 27 microseconds

Sensing Beam (Class 2 Laser)

Visible red Class 2 laser (temperature coefficient 0.25 nm/ °C) (see "Class 2 Laser Description and Safety Information" on page 6)

Rep Rate: 27 microseconds

Environmental Rating

IP67, UL Type 1

Operating Conditions

–10 °C to +50 °C (+14 °F to +122 °F)

95% at +50 °C maximum relative humidity (non-condensing)

Delay at Power Up

Class 1 Models: 250 ms

Class 2 Models: 10 ms

Laser Control

Apply 0 V DC to the white wire to enable the beam

Apply +10 V DC to 30 V DC to the white wire to inhibit the beam

Class 1 Enable Time: 240 ms; 100 ms disable time

Class 2 Enable Time: 8 ms; 1 ms disable time

Indicators

Green LED, indicates power applied

Construction

ABS housing, PMMA window

3 mm mounting hardware included

Connections

2 m (6.5 ft) unterminated 3-wire PVC-jacketed cable, or Integral 4-pin M12 male quick-disconnect connector

Certifications

Banner Engineering BV
Park Lane, Culliganlaan 2F bus 3
1831 Diegem, BELGIUM

Turck Banner LTD Blenheim House
Blenheim Court
Wickford, Essex SS11 8YT
GREAT BRITAIN

[4] May contain a small collimated spot in the center of the pattern. For best focus, view circle at distances greater than 1 meter and cross at distances greater than 0.3 m (image is not crisp at closer distances).
[5] Light distribution is non-uniform, having less light at ends. The horizontal line is more uniform than the vertical line.

© Banner Engineering Corp. All rights reserved.
www.bannerengineering.com

Required Overcurrent Protection

WARNING: Electrical connections must be made by qualified personnel in accordance with local and national electrical codes and regulations.

Overcurrent protection is required to be provided by end product application per the supplied table.

Overcurrent protection may be provided with external fusing or via Current Limiting, Class 2 Power Supply.

Supply wiring leads < 24 AWG shall not be spliced.

For additional product support, go to www.bannerengineering.com.

Supply Wiring (AWG)	Required Overcurrent Protection (A)	Supply Wiring (AWG)	Required Overcurrent Protection (A)
20	5.0	26	1.0
22	3.0	28	0.8
24	2.0	30	0.5

Class 1 Laser Description and Safety Information



Laser light. Do not stare into the beam.

Complies with 21 CFR 1040.10 and 1040.11 except for deviations pursuant to Laser Notice No. 56, dated May 8, 2019.



CAUTION:
- **Never stare directly into the sensor lens.**
- Laser light can damage your eyes.
- Avoid placing any mirror-like object in the beam. Never use a mirror as a retroreflective target.

CAUTION:
- **Return defective units to the manufacturer.**
- Use of controls or adjustments or performance of procedures other than those specified herein may result in hazardous radiation exposure.
- Do not attempt to disassemble this sensor for repair. A defective unit must be returned to the manufacturer.

CAUTION:
- **Ne regardez jamais directement la lentille du capteur.**
- La lumière laser peut endommager la vision.
- Évitez de placer un objet réfléchissant (de type miroir) dans la trajectoire du faisceau. N'utilisez jamais de miroir comme cible rétro-réfléchissante.

CAUTION:
- **Tout dispositif défectueux doit être renvoyé au fabricant.**
- L'utilisation de commandes, de réglages ou de procédures autres que celles décrites dans le présent document peut entraîner une exposition dangereuse aux radiations.
- N'essayez pas de démonter ce capteur pour le réparer. Tout dispositif défectueux doit être renvoyé au fabricant.

Class 1 lasers are lasers that are safe under reasonably foreseeable conditions of operation, including the use of optical instruments for intrabeam viewing.

Complies with IEC 60825-1:2014 and EN 60825-1:2014+A11:2021.

For safe laser use:
- Do not stare at the laser.
- Do not point the laser at a person’s eye.
- Mount open laser beam paths either above or below eye level, where practical.
- Terminate the beam emitted by the laser product at the end of its useful path.

Class 1 Laser Characteristics

Output power: < 1.9 mW
Laser wavelength: 650 nm
Pulse duration: 5 µs

© Banner Engineering Corp. All rights reserved.
www.bannerengineering.com

Class 2 Laser Description and Safety Information



Laser light. Do not stare into the beam.

Complies with 21 CFR 1040.10 and 1040.11 except for deviations pursuant to Laser Notice No. 56, dated May 8, 2019.

CLASS 2
LASER PRODUCT

CAUTION:
- **Never stare directly into the sensor lens.**
- Laser light can damage your eyes.
- Avoid placing any mirror-like object in the beam. Never use a mirror as a retroreflective target.

CAUTION:
- **Return defective units to the manufacturer.**
- Use of controls or adjustments or performance of procedures other than those specified herein may result in hazardous radiation exposure.
- Do not attempt to disassemble this sensor for repair. A defective unit must be returned to the manufacturer.

CAUTION:
- **Ne regardez jamais directement la lentille du capteur.**
- La lumière laser peut endommager la vision.
- Évitez de placer un objet réfléchissant (de type miroir) dans la trajectoire du faisceau. N'utilisez jamais de miroir comme cible rétro-réfléchissante.

CAUTION:
- **Tout dispositif défectueux doit être renvoyé au fabricant.**
- L'utilisation de commandes, de réglages ou de procédures autres que celles décrites dans le présent document peut entraîner une exposition dangereuse aux radiations.
- N'essayez pas de démonter ce capteur pour le réparer. Tout dispositif défectueux doit être renvoyé au fabricant.

Class 2 lasers are lasers that emit visible radiation in the wavelength range from 400 nm to 700 nm, where eye protection is normally afforded by aversion responses, including the blink reflex. This reaction may be expected to provide adequate protection under reasonably foreseeable conditions of operation, including the use of optical instruments for intrabeam viewing.

Complies with IEC 60825-1:2014 and EN 60825-1:2014+A11:2021.

Class 2 Laser Safety Notes. Low-power lasers are, by definition, incapable of causing eye injury within the duration of a blink (aversion response) of 0.25 seconds. They also must emit only visible wavelengths (400 nm to 700 nm). Therefore, an ocular hazard may exist only if individuals overcome their natural aversion to bright light and stare directly into the laser beam.

For safe laser use:
- Do not stare at the laser.
- Do not point the laser at a person’s eye.
- Mount open laser beam paths either above or below eye level, where practical.
- Terminate the beam emitted by the laser product at the end of its useful path.

IMPORTANT: This laser device is not bore-sighted.

Class 2 Laser Characteristics

Output power: <4 mW
Laser wavelength: 650 nm
Pulse duration: 5 µs

© Banner Engineering Corp. All rights reserved.
www.bannerengineering.com

Dimensions

Cabled models

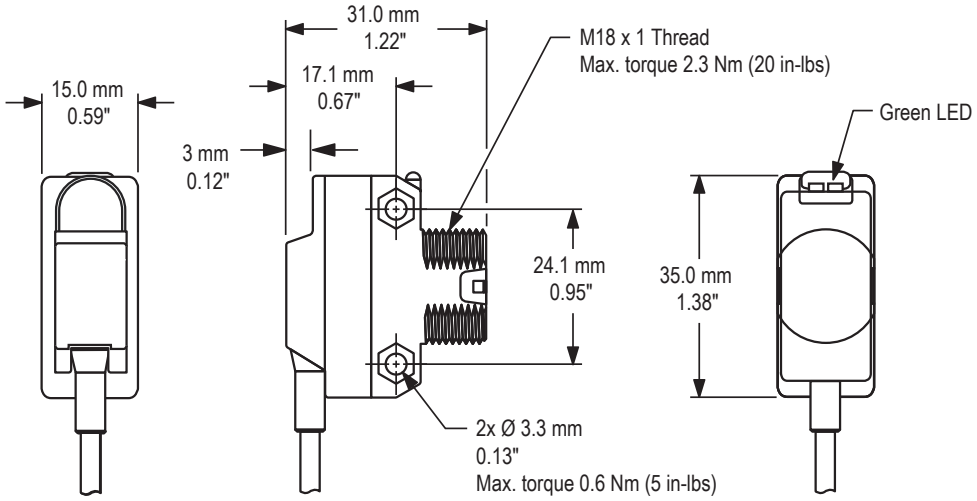

Quick disconnect models

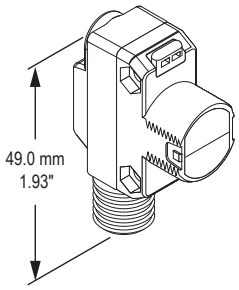

Lock nut

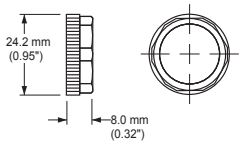

Accessories

Cordsets

4-pin Single-Ended M12 Female Cordsets (datasheet p/n 235937)				
Model	**Length**	**Dimensions (mm)**	**Pinout (Female)**	
BC-M12F4-22-1	1 m (3.28 ft)	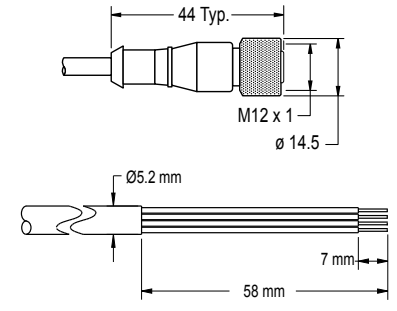	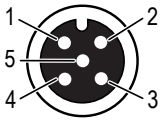	1 = Brown 2 = White 3 = Blue 4 = Black 5 = Unused c UL us LISTED
BC-M12F4-22-2	2 m (6.56 ft)			
BC-M12F4-22-5	5 m (16.4 ft)			
BC-M12F4-22-8	8 m (26.25 ft)			
BC-M12F4-22-10	10 m (30.81 ft)			
BC-M12F4-22-15	15 m (49.2 ft)			
BC-M12F4-22-20	20 m (65.61 ft)			
BC-M12F4-22-25	25 m (82.02 ft)			
BC-M12F4-22-30	30 m (98.42 ft)			

© Banner Engineering Corp. All rights reserved.
www.bannerengineering.com

4-pin Single-Ended M12 Female Right-Angle Cordsets (datasheet p/n 235937)				
Model	**Length**	**Dimensions (mm)**	**Pinout (Female)**	
BC-M12F4A-22-1	1 m (3.28 ft)	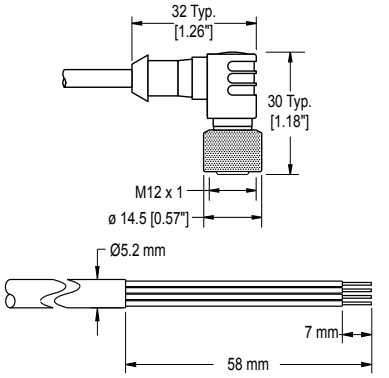	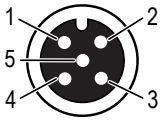	1 = Brown 2 = White 3 = Blue 4 = Black 5 = Unused c UL us LISTED
BC-M12F4A-22-2	2 m (6.56 ft)			
BC-M12F4A-22-5	5 m (16.4 ft)			
BC-M12F4A-22-8	8 m (26.25 ft)			
BC-M12F4A-22-10	10 m (30.81 ft)			
BC-M12F4A-22-15	15 m (49.2 ft)			

4-Pin Single-Ended Snap-on M8 Female Cordsets					
Model	**Length**	**Style**	**Dimensions**	**Pinout (Female)**	
PKG4-2	2.03 m (6.66 ft)	Straight	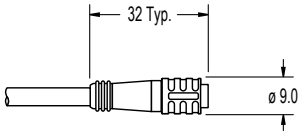	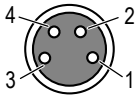	1 = Brown 2 = White 3 = Blue 4 = Black
PKW4Z-2	2 m (6.56 ft)	Right-Angle	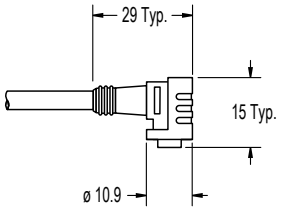	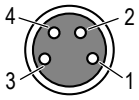	

Retroreflective Tape

Used for laser alignment.

Model	Reflectivity Factor	Maximum Temperature	Size
BRT-THG-4X4-5	0.7	+60 °C (+140 °F)	100 × 100 mm (package of 5)

Model	Reflectivity Factor	Maximum Temperature	Size
BRT-THG-8.5X11-2	0.7	+60 °C (+140 °F)	216 × 280 mm (package of 2)

Model	Reflectivity Factor	Maximum Temperature	Size
BRT-THG-18X36	0.7	+60 °C (+140 °F)	457 × 914 mm (single sheet)

Brackets

All measurements are listed in millimeters, unless noted otherwise. The measurements provided are subject to change.

SMB18A

- Right-angle mounting bracket with a curved slot for versatile orientation
- 12-ga. stainless steel
- 18 mm sensor mounting hole
- Clearance for M4 (#8) hardware
- CAD Files: DXF, PDF, IGS, STP

Hole center spacing: A to B = 24.2
Hole size: A = ø 4.6, B = 17.0 × 4.6, C = ø 18.5

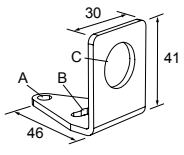

© Banner Engineering Corp. All rights reserved.
www.bannerengineering.com

SMB312S

- Stainless steel 2-axis, side-mount bracket
- CAD Files: DXF, PDF, IGS, STP

A = 4.3 × 7.5, B = diam. 3, C = 3 × 15.3

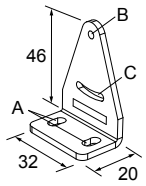

SMBQS18Y

- Die-cast bracket for 18 mm holes
- Includes metal hex nut and lock washer
- Allows ± 8° for cabled sensors
- CAD Files: DXF, PDF, IGS, STP

Hole size: A = ø 15.3

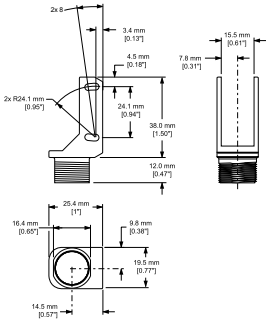

SMB46A

- 2-piece 12-ga. stainless steel bracket assembly with precision sensor alignment adjustment
- 2 mm hex key included
- CAD Files: DXF, PDF, IGS, STP

Hole center spacing: A to B = 18.5, B = 30.5
Hole size: A = ø 6.6, B = 7.1 x 20.3

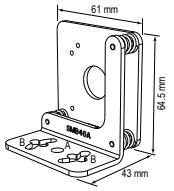

SMBQS18A

- Wrap-around protection bracket
- Die-cast bracket
- Base fits 18 mm threaded hole
- Metal hex nut, lock washer and grommet included
- Mounting holes specially designed for QS18AF sensors
- CAD Files: DXF, PDF, IGS, STP

Hole size: A = ø 15.3

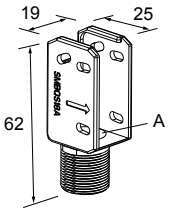

Product Support and Maintenance

Clean Sensor with Compressed Air Then Isopropyl Alcohol

Handle the sensor with care during installation and operation. Sensor windows soiled by fingerprints, dust, water, oil, etc. create stray light that may degrade the peak performance of the sensor.

Blow dust from the sensor using filtered, compressed air. If the sensor is still dirty, gently wipe the sensor with a dry optical cloth. If the dry optical cloth does not remove all residue, use 70% isopropyl alcohol on a clean optical cloth, then dry with a clean dry optical cloth and blow with filtered, compressed air. Do not use any other chemicals for cleaning.

Repairs

Contact Banner Engineering for troubleshooting of this device. **Do not attempt any repairs to this Banner device; it contains no field-replaceable parts or components.** If the device, device part, or device component is determined to be defective by a Banner Applications Engineer, they will advise you of Banner's RMA (Return Merchandise Authorization) procedure.

> **IMPORTANT:** If instructed to return the device, pack it with care. Damage that occurs in return shipping is not covered by warranty.

Contact Us

Banner Engineering Corp. | 9714 Tenth Avenue North | Plymouth, MN 55441, USA | Phone: + 1 888 373 6767

© Banner Engineering Corp. All rights reserved.
www.bannerengineering.com

For worldwide locations and local representatives, visit www.bannerengineering.com.

Banner Engineering Corp Limited Warranty

Banner Engineering Corp. warrants its products to be free from defects in material and workmanship for one year following the date of shipment. Banner Engineering Corp. will repair or replace, free of charge, any product of its manufacture which, at the time it is returned to the factory, is found to have been defective during the warranty period. This warranty does not cover damage or liability for misuse, abuse, or the improper application or installation of the Banner product.

THIS LIMITED WARRANTY IS EXCLUSIVE AND IN LIEU OF ALL OTHER WARRANTIES WHETHER EXPRESS OR IMPLIED (INCLUDING, WITHOUT LIMITATION, ANY WARRANTY OF MERCHANTABILITY OR FITNESS FOR A PARTICULAR PURPOSE), AND WHETHER ARISING UNDER COURSE OF PERFORMANCE, COURSE OF DEALING OR TRADE USAGE.

This Warranty is exclusive and limited to repair or, at the discretion of Banner Engineering Corp., replacement. **IN NO EVENT SHALL BANNER ENGINEERING CORP. BE LIABLE TO BUYER OR ANY OTHER PERSON OR ENTITY FOR ANY EXTRA COSTS, EXPENSES, LOSSES, LOSS OF PROFITS, OR ANY INCIDENTAL, CONSEQUENTIAL OR SPECIAL DAMAGES RESULTING FROM ANY PRODUCT DEFECT OR FROM THE USE OR INABILITY TO USE THE PRODUCT, WHETHER ARISING IN CONTRACT OR WARRANTY, STATUTE, TORT, STRICT LIABILITY, NEGLIGENCE, OR OTHERWISE.**

Banner Engineering Corp. reserves the right to change, modify or improve the design of the product without assuming any obligations or liabilities relating to any product previously manufactured by Banner Engineering Corp. Any misuse, abuse, or improper application or installation of this product or use of the product for personal protection applications when the product is identified as not intended for such purposes will void the product warranty. Any modifications to this product without prior express approval by Banner Engineering Corp will void the product warranties. All specifications published in this document are subject to change; Banner reserves the right to modify product specifications or update documentation at any time. Specifications and product information in English supersede that which is provided in any other language. For the most recent version of any documentation, refer to: www.bannerengineering.com.

For patent information, see www.bannerengineering.com/patents.

© Banner Engineering Corp. All rights reserved.
www.bannerengineering.com