LEDRRPFK(S) Ring Light Polarizing Filter Kit

For use with PresencePLUS® and LED..R..W Light Source

Installing the Polarizing Filter Kit

The LEDRRPFK(S) Polarizing Filter Kit provides polarizing filters for both the light sources and PresencePLUS camera.

1. If the ring light is installed on the camera, separate them by removing the two socket head cap screws with the 2.5 mm allen wrench included with the light kit.
2. Remove the four Phillips screws on the ring light's clear window. Discard the nylon washers, but save the screws for installing the filter and window.
3. Remove the protective plastic covering from both sides of each filter.
4. To ensure correct alignment of the polarizing planes, the ring light filter must be installed with the bump on the top side of the center hole, as shown in Figure 2. The camera filter is shaped to fit in only one direction.
5. Place the polarizing filter in the ring light and place the clear window over it. Secure with the four screws that were removed from the light in step 2. Do not use the nylon washers.
6. The sensor filters install behind the lens. Remove the lens and insert the red filter first, then the polarizing filter. Install the retaining ring, using the tool supplied with the filter kit.
   NOTE: Take care not to fingerprint the filters. If necessary, carefully clean the filters using only lens or window cleaner.
7. Reinstall the lens.
8. Install the ring light bracket to the top of the camera as described in the ring light literature.

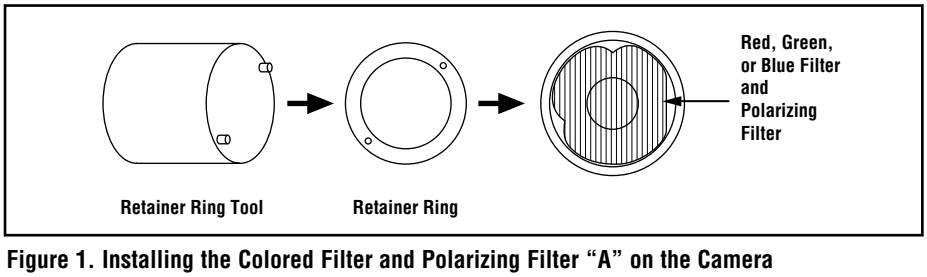

Figure 1. Installing the Colored Filter and Polarizing Filter "A" on the Camera

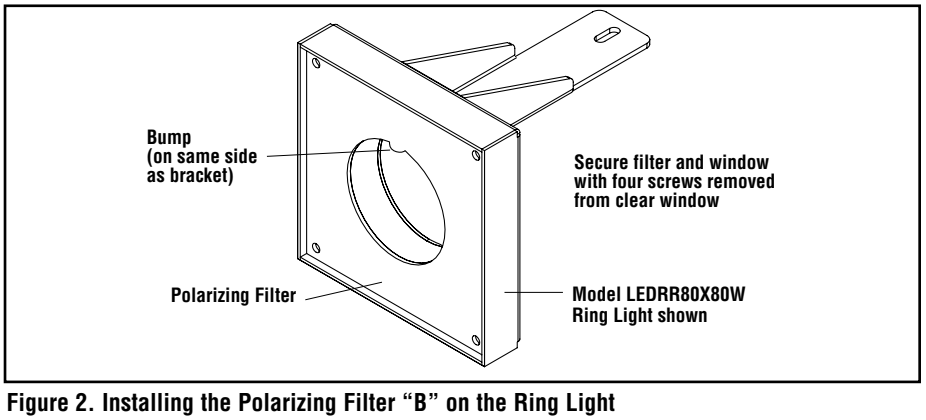

Figure 2. Installing the Polarizing Filter "B" on the Ring Light

Banner Engineering Corp., 9714 Tenth Ave. No., Minneapolis, MN 55441 • Phone: 763.544.3164 • www.bannerengineering.com • Email: sensors@bannerengineering.com

Printed in USA 11/04 Rev. B

ПРОМЭЛЕКТРОНИКА/ sales@prom-elec.com