BA1 SMTA Series Fibers

BA1 series fibers are diffuse-mode heavy-duty bifurcated glass fibers with a straight tip.

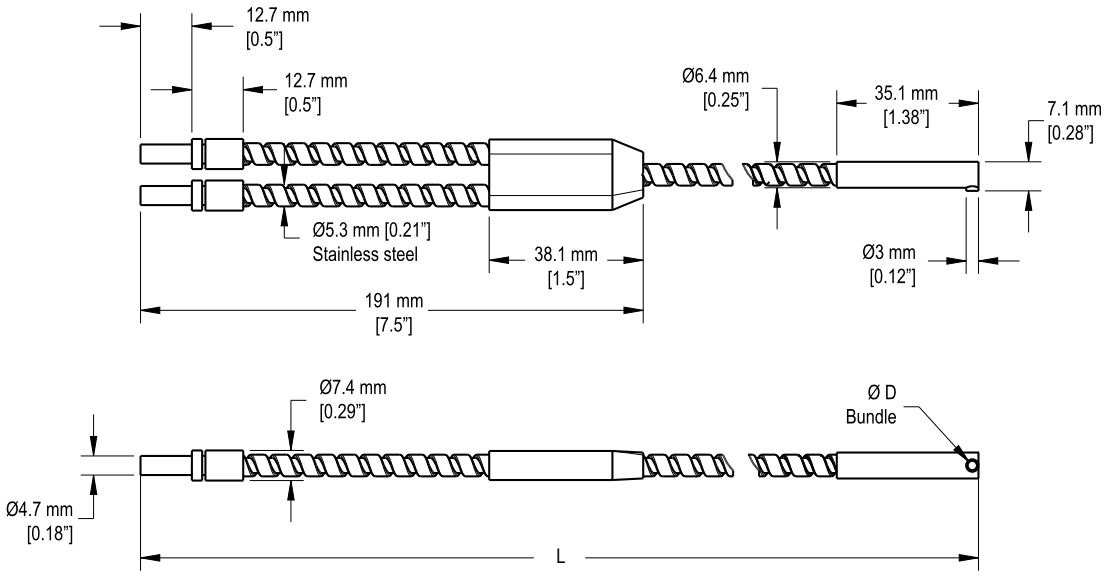

Model	CAD Files	L	D
BA.756SMTA	CAD files: DXF, PDF, IGS, STP	1829 mm (72")	1.17 mm (0.046")
BA1.53SMTA		914 mm (36")	2.29 mm (0.09")
BA1.56SMTA		1829 (72")	2.29 mm (0.09")
BA13SMTA		914 (36")	1.52 mm (0.06")

Original Instructions
09-Jan-26

© Banner Engineering Corp. All rights reserved.
www.bannerengineering.com

b_51958600
p/n: b_51958600 Rev. A

ПРОМЭЛЕКТРОНИКА/ sales@prom-elec.com

BAT 1 and 2 S Series Glass Fibers

BAT 1 and 2 S series fibers are diffuse-mode heavy-duty bifurcated glass fibers with a right-angle tip.

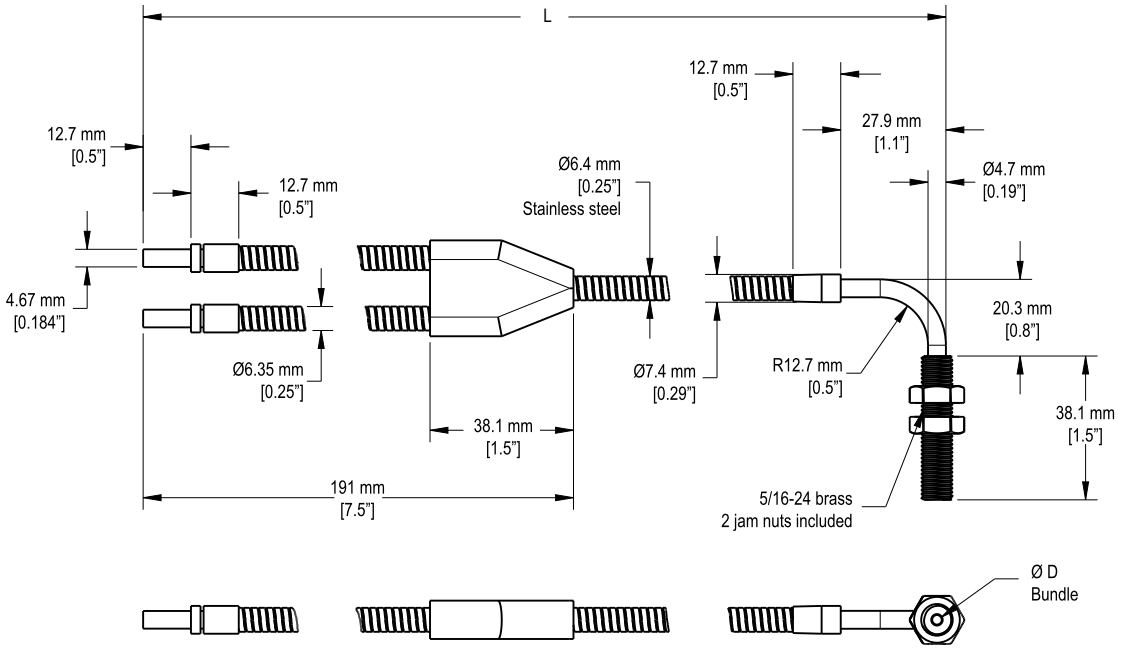

Model	CAD Files	L (in)	D (in)
BAT.753S	CAD files: DXF, PDF, IGS, STP	36	0.046
BAT13S		36	0.062
BAT15S		60	0.062
BAT16S		72	0.062
BAT210S		120	0.125
BAT214SM600		168	0.125
BAT215S		180	0.125
BAT220S		240	0.125
BAT24S		48	0.125
BAT25S		60	0.125
BAT26S		72	0.125
BAT27SM600		84	0.125
BAT28S		96	0.125
BAT28SMCT		96	0.125
BAT29S		108	0.125

Models ending in M600 have potted fibers on the threaded end with an epoxy rated to a maximum temperature of 600 °F.

© Banner Engineering Corp. All rights reserved.
www.bannerengineering.com

BAxSMETA Bifurcated Glass Fibers

BAxSMETA series fibers are diffuse-mode heavy-duty bifurcated glass fibers with a straight tip.

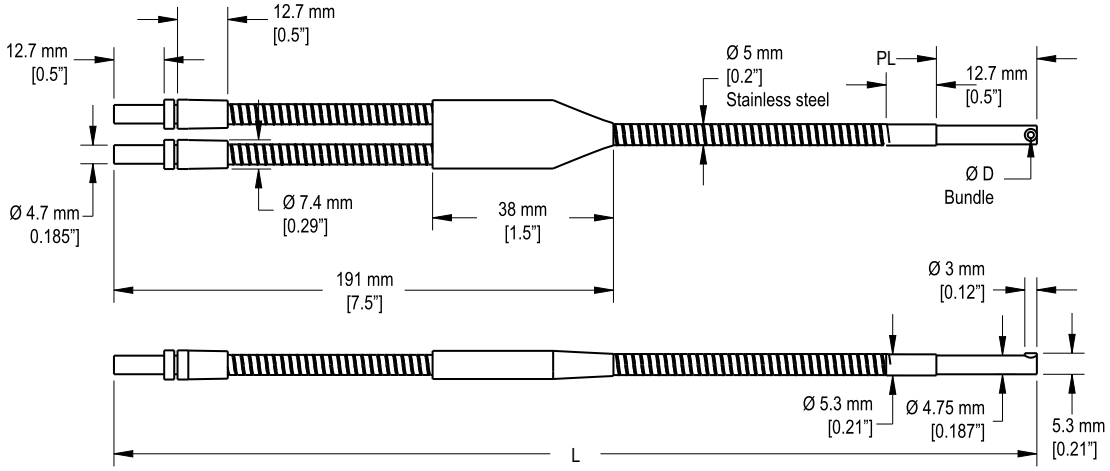

Model	CAD Files	PL	L	D
BA.443SMETA	CAD files: DXF, PDF, IGS, STP	25.4 mm (1")	914 mm (36")	0.69 mm (0.027")
BA.753SMETA		25.4 mm (1")	914 mm (36")	1.16 mm (0.046")
BA1.53SMETA		25.4 mm (1")	914 mm (36")	2.29 mm (0.09")
BA1.53SMETAM600		25.4 mm (1")	914 mm (36")	2.29 mm (0.09")
BA1.54SMETA		25.4 mm (1")	1219 mm (48")	2.29 mm (0.09")
BA13SMETA		25.4 mm (1")	914 mm (36")	1.58 mm (.062")

Models ending in M600 have potted fibers on the threaded end with an epoxy rated to a maximum temperature of 600 °F.

BA2xS Series Glass Fibers

BA2 series fibers are diffuse-mode heavy-duty bifurcated glass fibers with a right-angle tip.

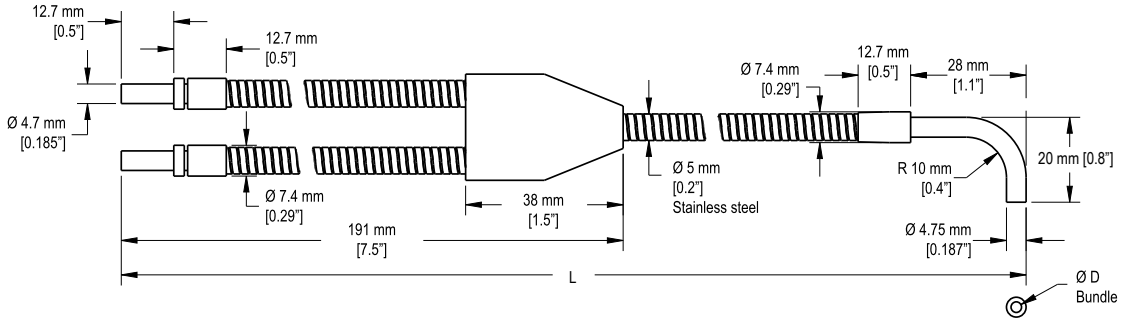

Model	CAD Files	L	D
BA13S	CAD files: DXF, PDF, IGS, STP	914 mm (36")	1.52 mm (0.062")
BA210S		3 m (120")	3 mm (0.125")
BA23S		914 mm (36")	3 mm (0.125")
BA230S		9 m (360")	3 mm (0.125")
BA23SM600		914 mm (36")	3 mm (0.125")
BA24S		1219 mm (48")	3 mm (0.125")
BA25S		1524 mm (60")	3 mm (0.125")
BA26S		1829 mm (72")	3 mm (0.125")

Continued on page 4

© Banner Engineering Corp. All rights reserved.
www.bannerengineering.com

Continued from page 3

Model	CAD Files	L	D
BA28SM600		2438 mm (96")	3 mm (0.125")

Models ending in M600 have potted fibers on the threaded end with an epoxy rated to a maximum temperature of 600 °F.

BAM752 Series Glass Fibers

BAM.752 series fibers are diffuse-mode heavy-duty bifurcated glass fibers with a right-angle tip.

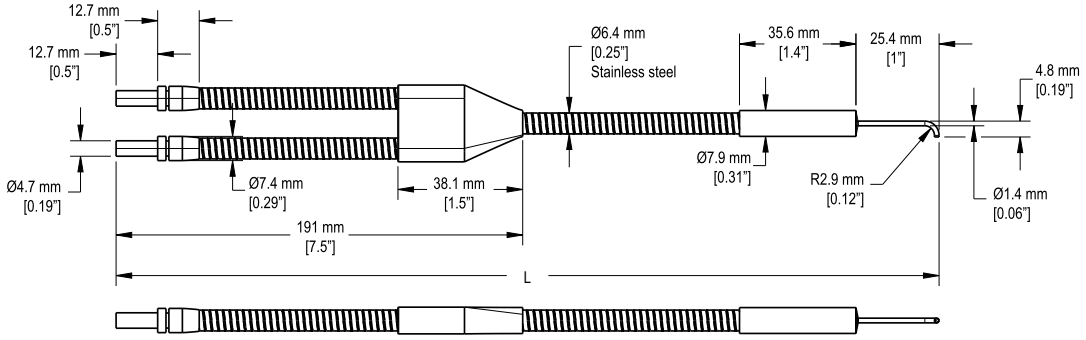

Model	CAD Files	L
BAM.752S	CAD files: DXF, PDF, IGS, STP	610 mm (24")
BAM.753S		914 mm (36")

BAT1 Series SS Terminated Glass Fiber

BAT1 series fibers are diffuse-mode heavy-duty bifurcated glass fibers with a tight right-angle tip.

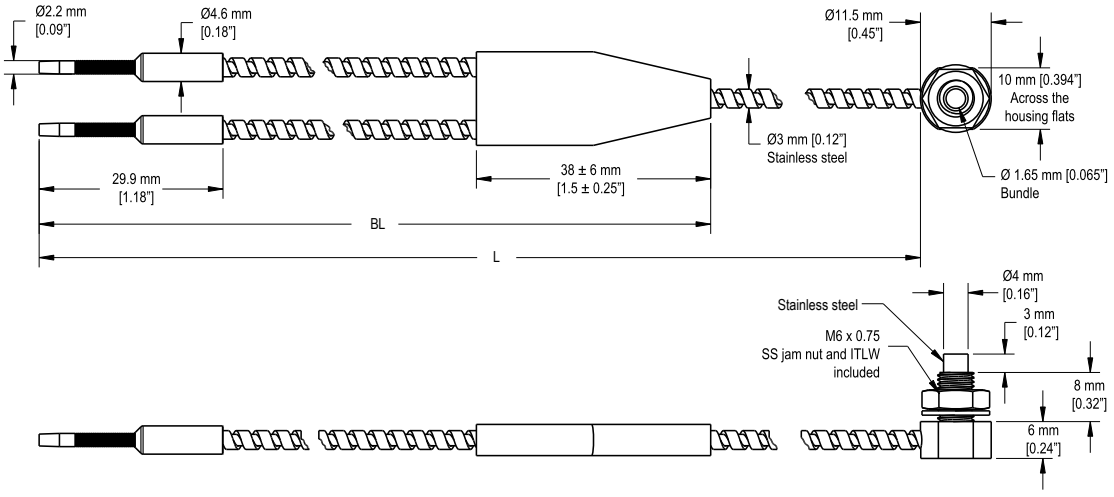

Model	CAD Files	L	BL
BAT16.6ST5MTA	CAD files: DXF, PDF, IGS, STP	2000 mm (79")	191 ± 12.7 mm (7.5" ± 0.5")

© Banner Engineering Corp. All rights reserved.
www.bannerengineering.com

BAT6 Series Glass Fibers

BAT6 series fibers are diffuse-mode heavy-duty bifurcated glass fibers with a right-angle tip and M6 threads for the VL line.

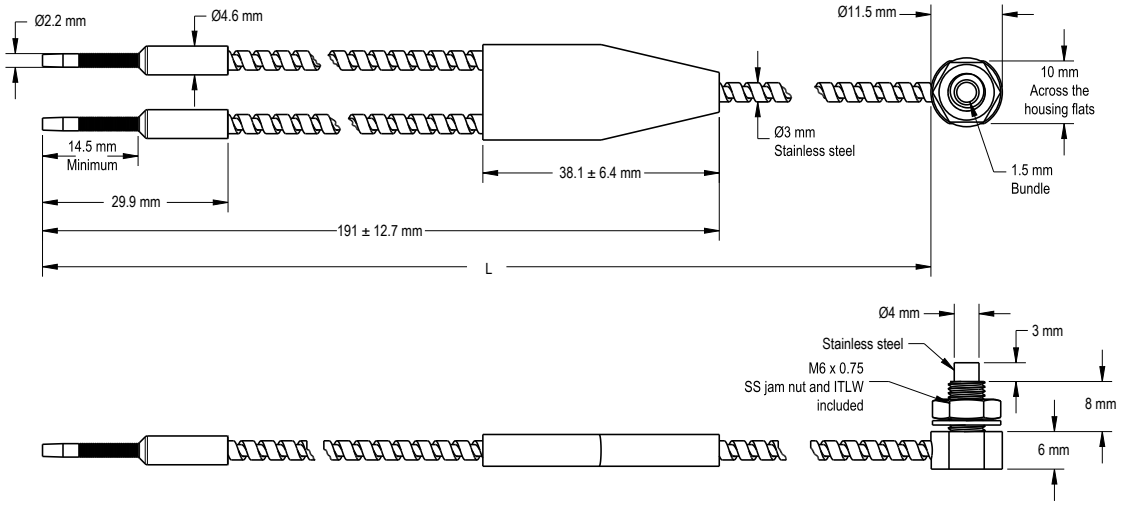

Model	CAD Files	L
BAT63ST5TA-VL	CAD files: DXF, PDF, IGS, STP	1000 mm (39.37")
BAT66ST5TA-VL		2000 mm (78.74")

© Banner Engineering Corp. All rights reserved.
www.bannerengineering.com

Banner Engineering Corp Limited Warranty

Banner Engineering Corp. warrants its products to be free from defects in material and workmanship for one year following the date of shipment. Banner Engineering Corp. will repair or replace, free of charge, any product of its manufacture which, at the time it is returned to the factory, is found to have been defective during the warranty period. This warranty does not cover damage or liability for misuse, abuse, or the improper application or installation of the Banner product.

THIS LIMITED WARRANTY IS EXCLUSIVE AND IN LIEU OF ALL OTHER WARRANTIES WHETHER EXPRESS OR IMPLIED (INCLUDING, WITHOUT LIMITATION, ANY WARRANTY OF MERCHANTABILITY OR FITNESS FOR A PARTICULAR PURPOSE), AND WHETHER ARISING UNDER COURSE OF PERFORMANCE, COURSE OF DEALING OR TRADE USAGE.

This Warranty is exclusive and limited to repair or, at the discretion of Banner Engineering Corp., replacement. **IN NO EVENT SHALL BANNER ENGINEERING CORP. BE LIABLE TO BUYER OR ANY OTHER PERSON OR ENTITY FOR ANY EXTRA COSTS, EXPENSES, LOSSES, LOSS OF PROFITS, OR ANY INCIDENTAL, CONSEQUENTIAL OR SPECIAL DAMAGES RESULTING FROM ANY PRODUCT DEFECT OR FROM THE USE OR INABILITY TO USE THE PRODUCT, WHETHER ARISING IN CONTRACT OR WARRANTY, STATUTE, TORT, STRICT LIABILITY, NEGLIGENCE, OR OTHERWISE.**

Banner Engineering Corp. reserves the right to change, modify or improve the design of the product without assuming any obligations or liabilities relating to any product previously manufactured by Banner Engineering Corp. Any misuse, abuse, or improper application or installation of this product or use of the product for personal protection applications when the product is identified as not intended for such purposes will void the product warranty. Any modifications to this product without prior express approval by Banner Engineering Corp will void the product warranties. All specifications published in this document are subject to change; Banner reserves the right to modify product specifications or update documentation at any time. Specifications and product information in English supersede that which is provided in any other language. For the most recent version of any documentation, refer to: www.bannerengineering.com.

For patent information, see www.bannerengineering.com/patents.

Original Instructions
09-Jan-26

© Banner Engineering Corp. All rights reserved.
www.bannerengineering.com

b_51958600
p/n: b_51958600 Rev. A